TM 11-5840-222-15

DEPARTMENT OF THE ARMY TECHNICAL MANUAL

G 9

OPERATION AND MAINTENANCE

RADIO SET AN/TPS-1G

Cables W-1 & W-2

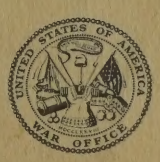

HEADQUARTERS, DEPARTMENT OF THE ARMY

DECEMBER 1958

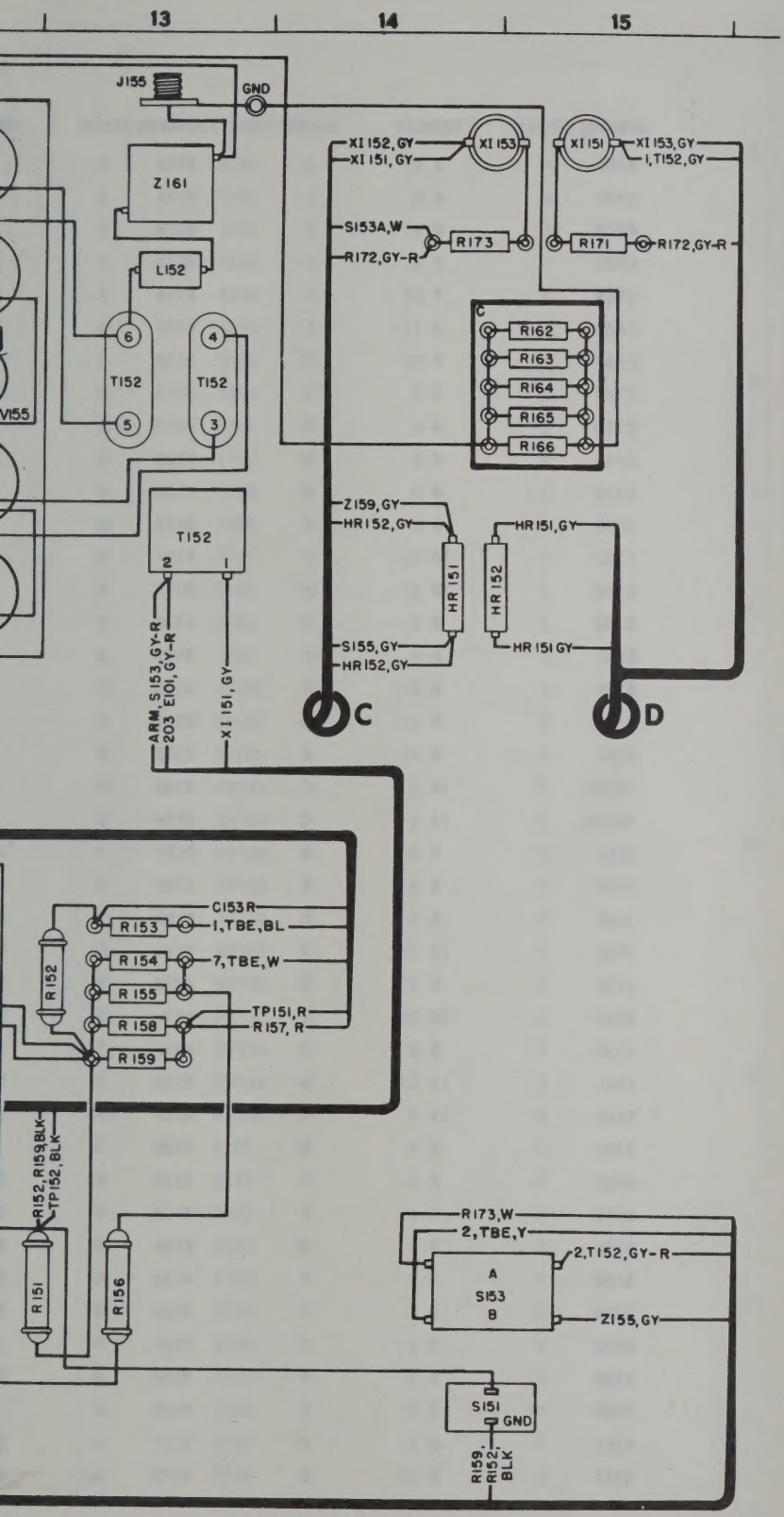

Figure 7–91. Modulator Practical Wiring Diagram

SYMBOL	VERT	HORIZ	SYMBOL	VERT	HORIZ	SYMBOL	VERT	HORIZ
B151	9	A	R112	7	E	R173	14	A
C101	4	F	R113	7	E	S101	5	B
C102	7	F	R114	7	E	S151	15	G
C103	7	F	R115	7	E	S152	3	E
C104	7	E	R116	7	E	S153	15	F
C105	4	F	R117	7	D	S154	11	A
C107	7	C	R118	7	E	S155	12	A
C109	4	E	R119	7	C	S156	3	A
C110	4	D	R120	7	C	T101	6	C
C111	4	D	R122	7	D	T102	5	E
C112	4	D	R124	7	D	T103	6	C
C153	8	D	R125	7	D	T105	5	E
C156	10	E	R126	7	D	T151	11	C
C157	10	E	R127	4	E	T152	13	C
C158	9	A	R128	4	E	T153	8	C
E101	8	F	R129	4	E	T155	4	A
E102	8	E	R130	4	D	X1151	15	A
E151	9	A	R131	4	D	X1152	11	A
E152	9	B	R132	4	D	X1153	14	A
HR151	14	C	R133	4	D	XV101	6	F
HR152	14	C	R134	4	E	XV102	6	F
J151	1	B	R151	13	F	XV103	6	D
J152	2	B	R152	13	E	XV105	6	E
J153	3	F	R153	13	D	XV106	6	D
J155	13	A	R154	13	D	XV151	12	C
J156	3	G	R155	13	E	XV152	12	C
K151	10	E	R156	13	F	XV153	12	A
K152	3	C	R157	12	F	XV154	12	B
L151	11	D	R158	13	E	XV155	12	B
L152	13	B	R159	13	E	XV156	8	B
R101	7	D	R160	9	C	Z101	4	C
R102	7	F	R162	15	B	Z151	2	D
R103	7	F	R163	15	B	Z152	2	E
R104	7	G	R164	15	B	Z153	2	E
R105	7	F	R165	15	B	Z154	2	F
R106	7	F	R166	15	B	Z155	2	D
R107	7	F	R167	3	C	Z156	2	E
R108	7	F	R168	10	D	Z157	2	E
R109	7	E	R169	6	A	Z158	2	F
R110	5	G	R171	15	A	Z159	2	F
R111	7	E	R172	10	A	Z161	13	A

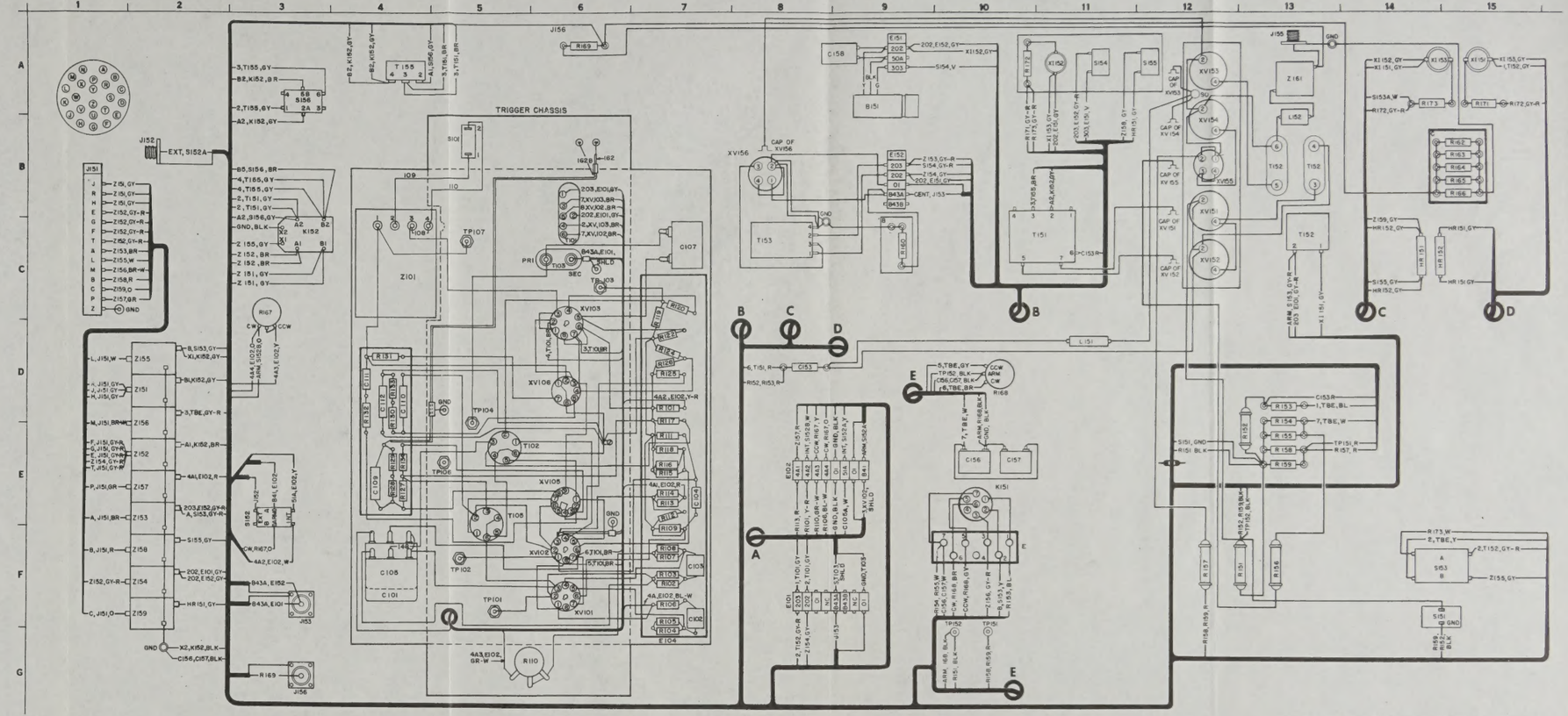

Figure 7—91. Modulator Practical Wiring Diagram

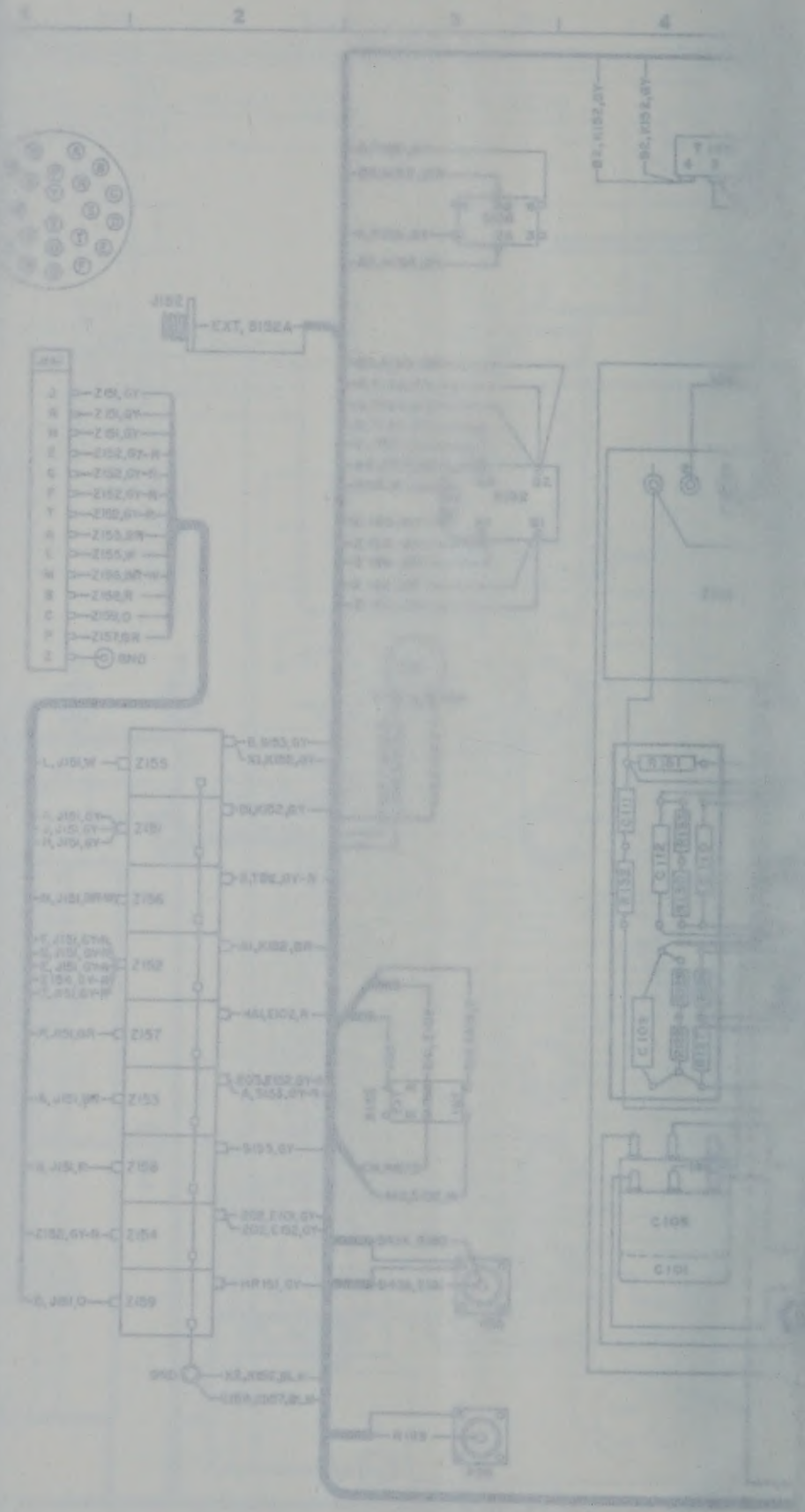

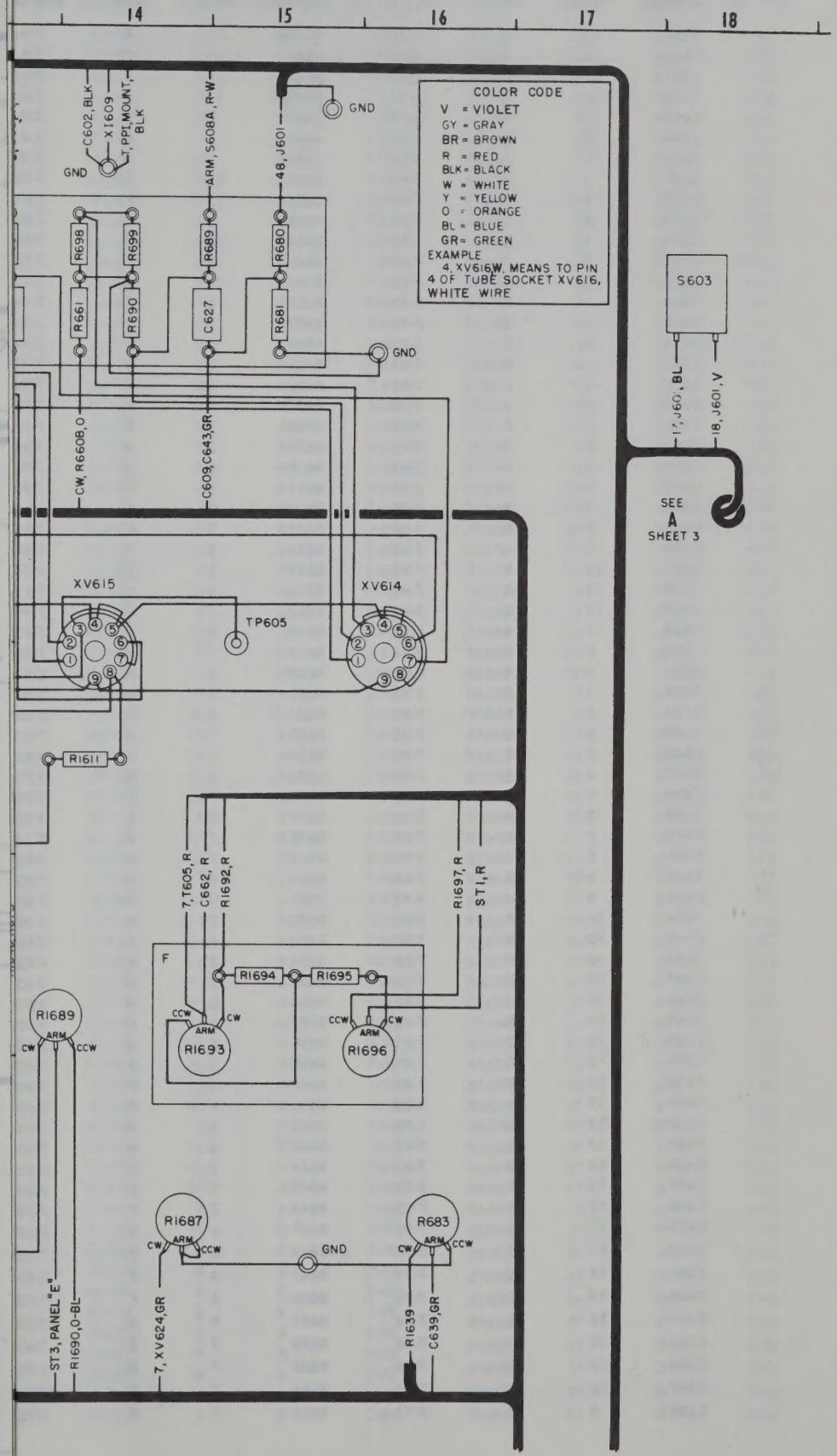

Figure 7—92. Indicator Practical Wiring Diagram (Upper Half of Rear Subchassis)

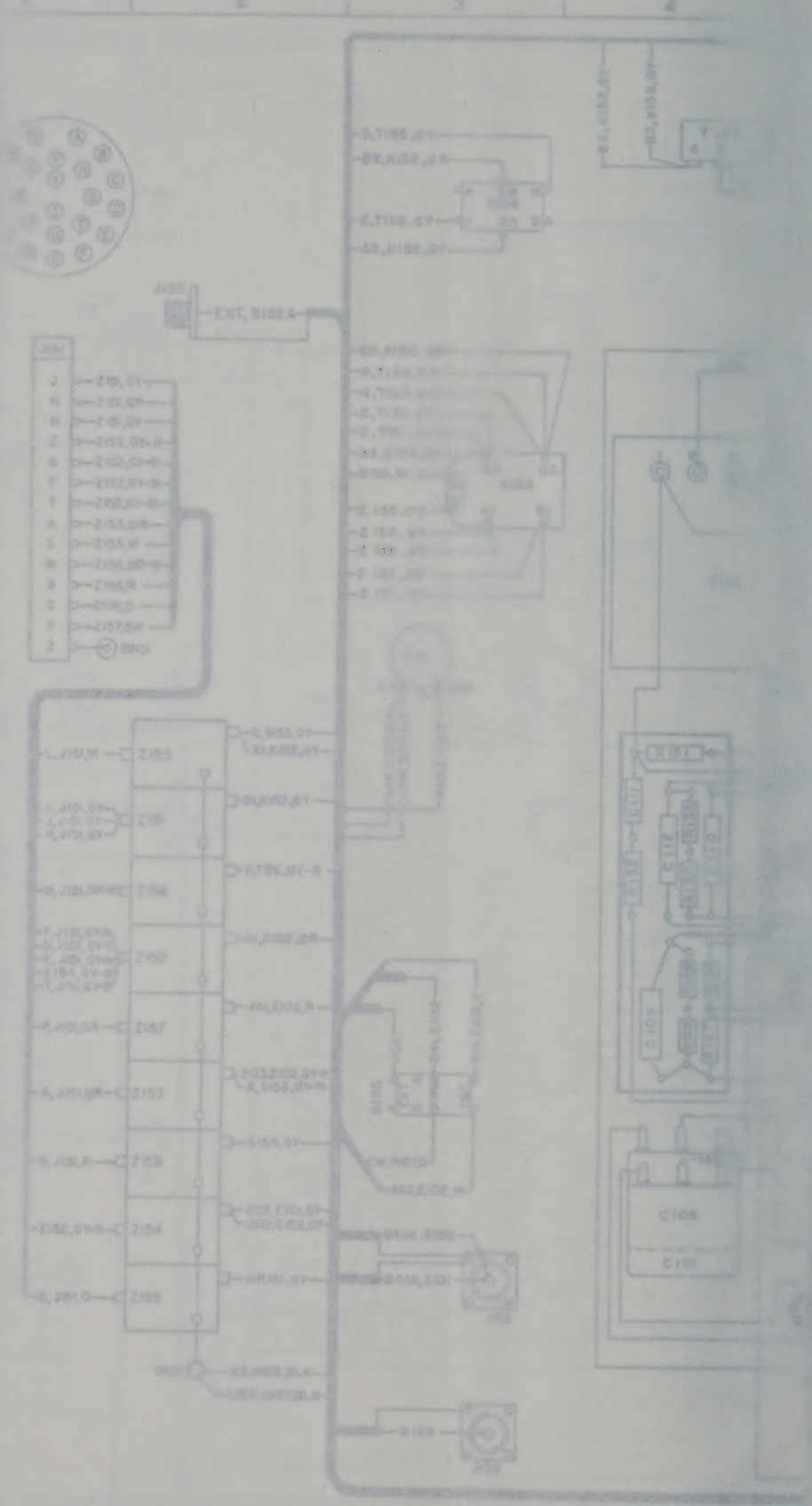

SYMBOL	VERT	HORIZ	FIG. NO.
B601	15	F	7-94
B602	14	F	7-94
C601	13	B	7-94
C602	14	B	7-94
C604	2	D	7-93
C605	8	B	7-93
C606	2	E	7-93
C607	2	D	7-93
C609	8	H	7-93
C610	8	D	7-93
C611	8	D	7-93
C612	8	D	7-93
C613	8	D	7-93
C614	6	H	7-93
C615	8	E	7-93
C616	8	E	7-93
C617	8	E	7-93
C618	8	E	7-93
C619	6	B	7-93
C620	2	F	7-93
C621	5	H	7-93
C622	6	H	7-93
C623	4	G	7-92
C624	2	B	7-93
C625	9	H	7-93
C626	9	H	7-93
C627	14	B	7-92
C628	13	B	7-92
C629	12	B	7-92
C630	9	A	7-93
C631	9	F	7-92
C632	9	B	7-92
C633	9	B	7-92
C634	8	B	7-92
C635	6	B	7-92
C636	6	B	7-92
C637	4	B	7-92
C638	7	B	7-92
C639	2	D	7-93
C640	2	C	7-93
C641	2	C	7-93
C642	9	B	7-93
C643	8	H	7-93
C644	16	B	7-93
C645	10	H	7-93
C646	10	H	7-93
C647	17	E	7-93
C648	12	D	7-93
C649	12	D	7-93
C650	12	D	7-93
C651	12	D	7-93
C652	12	D	7-93
C653	17	E	7-93
C654	12	E	7-93
C655	12	E	7-93
C656	12	E	7-93
C657	12	E	7-93
C658	12	E	7-93
C659	11	B	7-93
C660	11	B	7-93
C661	14	D	7-93
C662	14	B	7-93
C664	16	F	7-94
C665	12	D	7-94
C666	12	D	7-94
C667	12	D	7-94
CR601	2	A	7-93
CR602	7	B	7-94
E601	15	G	7-94
E602	10	F	7-94
HR601	13	F	7-94
J601	8	B	7-93
J602	3	G	7-94
J603	4	A	7-94
L601	15	E	7-94
L602	17	F	7-94
L603	2	A	7-93
L604	10	B	7-92
M601	7	C	7-94
R601	11	A	7-93
R602	3	C	7-94
R603	3	B	7-94
R604	4	B	7-94
R605	8	B	7-94
R606	8	B	7-94
R607	7	B	7-94
R608	5	F	7-94
R609	8	A	7-94
R610	8	H	7-92
R611	2	D	7-93
R612	2	E	7-93
R613	2	E	7-93
R614	2	D	7-93
R615	2	E	7-93
R616	2	D	7-93
R617	2	E	7-93
R618	2	D	7-93
R619	7	H	7-93
R620	6	H	7-93
R621	6	H	7-93
R622	6	H	7-93
R623	7	H	7-93
R624	7	H	7-93
R625	7	H	7-93
R626	7	E	7-93
R627	8	E	7-93
R628	7	H	7-93
R629	7	H	7-93
R630	7	H	7-93
R631	7	H	7-93
R632	7	H	7-93
R633	6	H	7-93
R634	8	E	7-93
R635	5	H	7-93
R636	6	H	7-93
R637	5	H	7-93
R638	5	H	7-93
R639	2	F	7-93
R640	2	F	7-93
R641	2	F	7-93
R642	5	H	7-93
R643	5	H	7-93
R644	2	F	7-93
R645	2	F	7-93
R646	2	F	7-93
R647	2	F	7-93
R648	2	E	7-93
R649	2	E	7-93
R650	2	F	7-93
R651	9	H	7-92
R652	7	E	7-93
R653	7	E	7-93
R654	7	E	7-93
R655	7	E	7-93
R656	6	H	7-93
R657	16	E	7-94
R658	6	C	7-93
R659	5	G	7-92
R660A	6	F	7-92
R660B	7	F	7-92
R661	14	B	7-92
R662	17	B	7-94
R663	15	D	7-94
R664	14	E	7-94
R665	16	B	7-94
R666	2	E	7-93
R667	2	E	7-93
R668	2	E	7-93
R669	2	E	7-93
R670	2	E	7-93
R671	4	H	7-92
R672	2	A	7-93
R673	6	D	7-93
R674	2	A	7-93
R675	2	B	7-93
R676	2	B	7-93
R678	2	B	7-93
R679	2	A	7-93
R680	15	B	7-92
R681	15	B	7-92
R682	4	H	7-92
R683	16	H	7-92
R684	9	H	7-93
R685	6	H	7-92
R686	9	H	7-93
R687	9	H	7-93
R688	9	H	7-93
R689	14	B	7-92
R690	14	B	7-92
R691	10	G	7-92
R692	11	B	7-92
R693	12	B	7-92
R694	13	B	7-92
R695	12	B	7-92
R696	13	B	7-92
R697	13	B	7-92
R698	14	B	7-92
R699	14	B	7-92
R1601	11	B	7-92
R1602	11	B	7-92
R1603	11	B	7-92
R1604	11	B	7-92
R1605	11	B	7-92
R1606	10	B	7-92
R1607	10	B	7-92
R1608	10	B	7-92
R1609	10	B	7-92
R1610	9	F	7-92
R1611	14	E	7-92
R1612	13	E	7-92
R1613	10	B	7-92
R1614	9	B	7-92
R1615	9	B	7-92
R1616	8	B	7-92
R1617	8	G	7-92
R1618	5	F	7-92
R1619	5	B	7-92
R1620	7	B	7-92
R1621	7	B	7-92
R1622	5	B	7-92
R1623	5	B	7-92
R1624	5	B	7-92
R1625	5	B	7-92
R1626	7	B	7-92
R1627	4	B	7-92
R1628	4	B	7-92
R1629	7	G	7-92
R1630	5	C	7-92
R1631	7	B	7-92
R1632	7	B	7-92
R1633	7	E	7-93
R1634	13	E	7-93
R1635	2	D	7-93
R1636	2	C	7-93
R1637	2	C	7-93
R1638	2	C	7-93
R1639	2	C	7-93
R1640	2	C	7-93
R1641	2	C	7-93
R1642	2	B	7-93
R1643	2	B	7-93
R1644	2	B	7-93
R1645	2	B	7-93
R1646	2	B	7-93
R1647	8	H	7-93
R1648	10	H	7-93
R1649	10	H	7-93
R1650	10	H	7-93
R1651	11	H	7-93
R1652	11	H	7-93
R1653	8	H	7-93
R1654	8	H	7-93
R1655	12	G	7-92
R1656	10	H	7-93
R1657	10	F	7-93
R1658	9	H	7-93
R1659	9	H	7-93
R1660	13	D	7-93
R1661	13	D	7-93
R1662	13	D	7-93
R1663	13	D	7-93
R1664	17	E	7-93
R1665	11	H	7-93
R1666	11	H	7-93
R1667	17	E	7-93
R1668	17	E	7-93
R1669	11	F	7-93
R1670	12	E	7-93
R1671	11	H	7-93
R1672	11	H	7-93
R1673	11	H	7-93
R1674	11	H	7-93
R1675	11	H	7-93
R1676	11	H	7-92
R1677	12	D	7-93
R1678	17	E	7-93
R1679	17	D	7-93
R1680	17	E	7-93
R1681	17	E	7-93
R1682	11	B	7-93
R1683	11	B	7-93
R1684	17	D	7-93
R1685	17	D	7-93
R1686	17	D	7-93
R1687	14	H	7-92
R1688	17	E	7-93
R1689	13	G	7-92
R1690	17	D	7-93
R1691	11	B	7-93
R1692	11	B	7-93
R1693	14	G	7-92
R1694	15	G	7-92
R1695	15	G	7-92
R1698	17	D	7-93
R2601	13	H	7-92
R2602	17	D	7-93
R2603	11	D	7-93
R2604	11	D	7-94
R2605	11	D	7-94
R2606	11	D	7-94
R2607	12	F	7-94
R2608	12	F	7-94
R2609	12	F	7-94
R2610	12	F	7-94
R2611	12	F	7-94
R2612	12	F	7-94
R2613	11	F	7-94
R2614	11	F	7-94
R2615	13	F	7-94
R2616	12	F	7-94
R2617	4	C	7-94
R2618	2	F	7-94
R2619	14	B	7-94
R2620	4	B	7-92
R2621	3	D	7-93
R2622	8	B	7-93
R2623	15	D	7-93
R2624	12	D	7-94
R2625	4	C	7-93
R2626	8	B	7-92
R2627	7	F	7-94
R2628	11	F	7-94
R2629	11	F	7-94
R2630	11	E	7-94
R2631	11	E	7-94
R2632	11	E	7-94
R2634	11	D	7-94
R2636	13	E	7-94
R2637	13	E	7-94
S601	3	G	7-94
S602	6	C	7-94
S603	18	B	7-92
S604	7	B	7-94
S606	8	D	7-92
S607	9	B	7-93
S608A	3	D	7-94
S608B	4	D	7-94
S609	12	D	7-93
S610	11	C	7-94
S611	14	C	7-94
S612	15	E	7-94
S613A-B	6	E	7-94
S615	1	B	7-94
S616	2	B	7-94
S617	13	A	7-94
S618	14	A	7-94
ST1	11	A	7-93
ST2	11	A	7-93
ST3	11	C	7-93
T601	6	E	7-93
T603	5	E	7-92
T604	13	D	7-94
T605	2	E	7-92
TE1	6	D	7-93
TE2	6	D	7-93
TE3	6	D	7-93
TE4	6	C	7-93
TE5	6	C	7-93
TE6	6	C	7-93
TE7	3	C	7-94
TE8	8	C	7-94
TE9	8	B	7-94
TE10	8	B	7-94
TP601	8	F	7-93
TP602	5	F	7-93
TP603	5	D	7-93
TP604	13	F	7-93
TP605	15	E	7-92
TP606	13	E	7-92
TP607	9	E	7-92
TP608	5	E	7-92
TP609	14	F	7-93
TP610	15	D	7-93
TP611	15	C	7-93
V609	17	F	7-94
XD5601	3	F	7-94
XD5602	3	E	7-94
XD5603	3	E	7-94
XD5604	3	E	7-94
XD5611	1	A	7-94
XI601	4	E	7-94
XI602	4	F	7-94
XI603	4	F	7-94
XI604	4	F	7-94
XI605	4	F	7-94
XI606	3	F	7-94
XI607	3	F	7-94
XI608	3	F	7-94
XI609	6	B	7-94
XI610	13	B	7-94
XV601	5	C	7-93
XV602	5	B	7-93
XV603	8	F	7-93
XV604	9	F	7-93
XV605	5	E	7-93
XV606	5	F	7-93
XV607	5	D	7-93
XV608	5	E	7-93
XV609	7	B	7-93
XV610	5	C	7-93
XV611	3	F	7-93
XV612	3	G	7-92
XV613	12	F	7-93
XV614	16	E	7-93
XV615	14	E	7-92
XV616	12	E	7-92
XV617	8	E	7-92
XV618	6	E	7-92
XV619	3	I	7-92
XV620	5	A	7-93
XV621	13	F	7-93
XV622	15	E	7-93
XV623	15	E	7-93
XV624	15	D	7-93
XV625	15	A	7-93
XV626	13	E	7-94
Z601	12	F	7-92
Z602	11	B	7-94
Z603	11	B	7-94
Z604	12	B	7-94
Z605	12	B	7-94
Z606	11	B	7-94

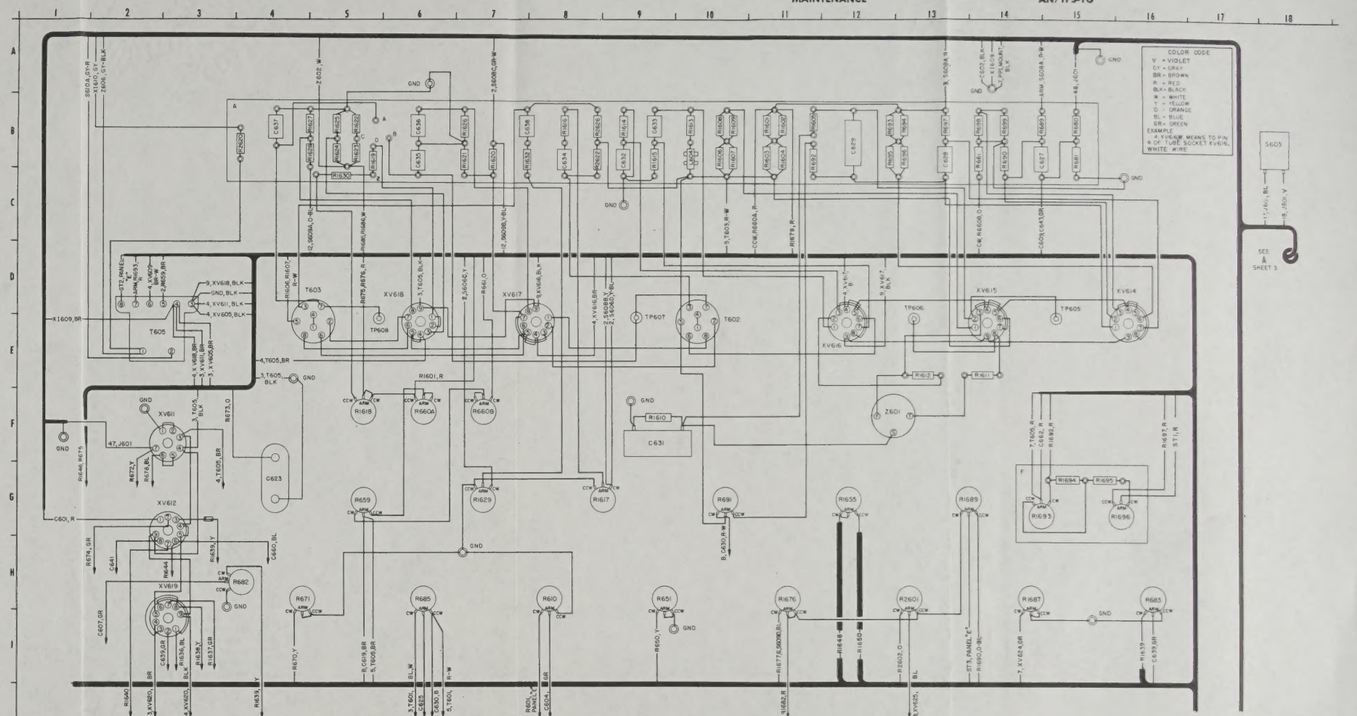

Figure 7–92. Indicator Practical Wiring Diagram (Upper Half of Rear Subchassis)

FIG. NO.	SYMBOL	VERT	HORIZ	FIG. NO.
7-92	TE2	6	D	7-93
7-93	TE3	6	D	7-93
7-92	TE4	6	C	7-93
7-92	TE5	6	C	7-93
7-93	TE6	6	C	7-93
7-93	TE7	8	C	7-94
7-92	TE8	8	C	7-94
7-93	TE9	8	B	7-94
7-94	TE10	8	B	7-94
7-94	TP601	6	F	7-93
7-94	TP602	5	F	7-93
7-94	TP603	5	D	7-93
7-94	TP604	13	F	7-93
7-94	TP605	15	E	7-93
7-94	TP606	13	E	7-93
7-94	TP607	9	E	7-93
7-94	TP608	5	E	7-93
7-94	TP609	14	F	7-93
7-94	TP610	15	D	7-93
7-94	TP611	15	C	7-93
7-94	V609	17	F	7-94
7-94	XDS601	3	F	7-94
7-94	XDS602	3	E	7-94
7-94	XDS603	3	E	7-94
7-94	XDS604	3	E	7-94
7-93	XDS611	1	A	7-94
7-93	XI601	4	E	7-94
7-93	XI602	4	F	7-94
7-93	XI603	4	F	7-94
7-94	XI604	4	F	7-94
7-93	XI605	4	F	7-94
7-93	XI606	3	F	7-94
7-94	XI607	3	F	7-94
7-94	XI608	3	F	7-94
7-94	XI609	6	B	7-94
7-94	XI610	13	B	7-94
7-94	XV601	5	C	7-93
7-94	XV602	5	B	7-93
7-94	XV603	5	F	7-93
7-94	XV604	9	F	7-93
7-94	XV605	5	E	7-93
7-94	XV606	5	F	7-93
7-94	XV607	5	D	7-93
7-92	XV608	5	E	7-93
7-94	XV609	7	B	7-93
7-93	XV610	5	C	7-93
7-93	XV611	3	F	7-92
7-94	XV612	3	G	7-92
7-94	XV613	12	F	7-93
7-93	XV614	16	E	7-93
7-94	XV615	14	E	7-92
7-94	XV616	12	E	7-92
7-94	XV617	8	E	7-93
7-94	XV618	6	E	7-93
7-94	XV619	3	I	7-93
7-94	XV620	5	A	7-93
7-94	XV621	13	F	7-93
7-94	XV622	15	E	7-93
7-93	XV623	15	E	7-93
7-93	XV624	15	D	7-93
7-93	XV625	15	A	7-93
7-93	XV626	13	E	7-94
7-92	Z601	12	F	7-93
7-92	Z602	11	B	7-94
7-94	Z603	11	B	7-94
7-92	Z604	12	B	7-94
7-93	Z605	12	B	7-94
7-93	Z606	11	B	7-94

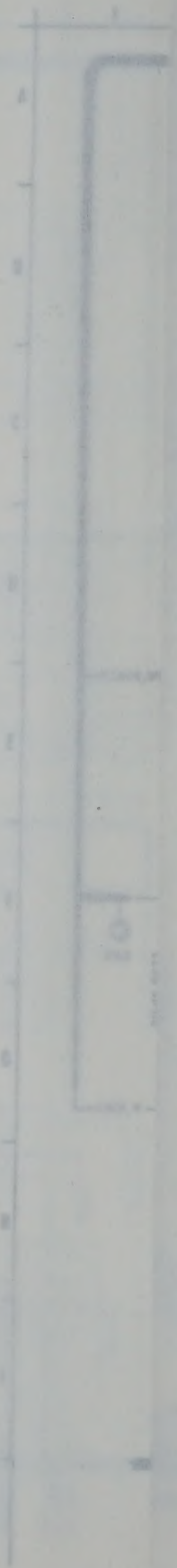

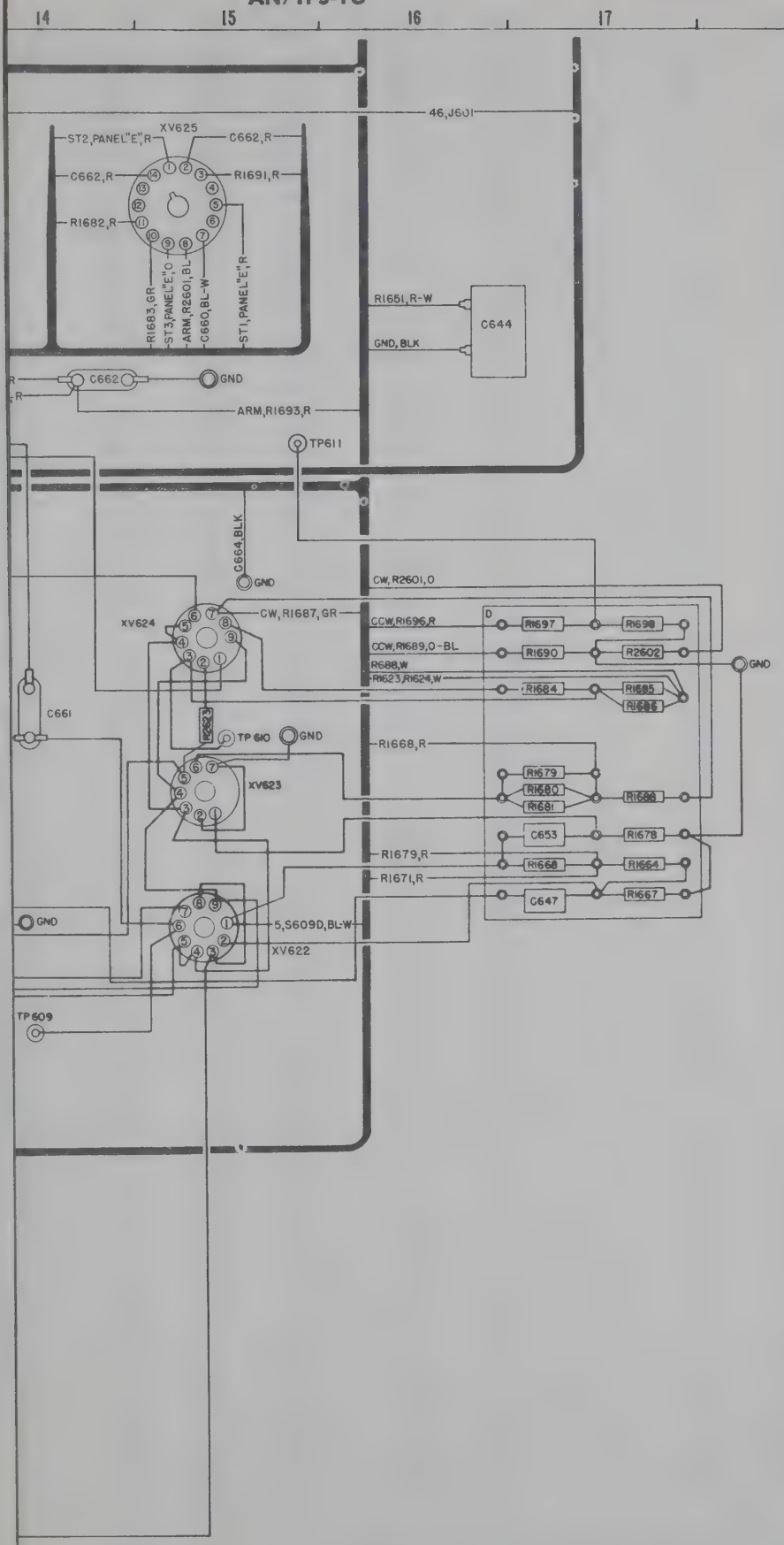

Figure 7—93. Indicator Practical Wiring Diagram (Upper Half of Rear Subchassis)

SYMBOL	VERT	HORIZ	FIG. NO.
B601	15	F	7-94
B602	14	F	7-94
C601	13	B	7-94
C602	14	B	7-94
C604	2	D	7-93
C605	8	B	7-93
C606	2	E	7-93
C607	2	D	7-93
C609	8	H	7-93
C610	8	D	7-93
C611	8	D	7-93
C612	8	D	7-93
C613	8	D	7-93
C614	6	H	7-93
C615	8	E	7-93
C616	8	E	7-93
C617	8	E	7-93
C618	8	E	7-93
C619	6	B	7-93
C620	2	F	7-93
C621	5	H	7-93
C622	6	H	7-93
C623	4	G	7-92
C624	2	B	7-93
C625	9	H	7-93
C626	9	H	7-93
C627	14	B	7-92
C628	13	B	7-92
C629	12	B	7-92
C630	9	A	7-93
C631	9	F	7-92
C632	9	B	7-92
C633	9	B	7-92
C634	8	B	7-92
C635	6	B	7-92
C636	6	B	7-92
C637	4	B	7-92
C638	7	B	7-92
C639	2	D	7-93
C640	2	C	7-93
C641	2	C	7-93
C642	9	B	7-93
C643	8	H	7-93
C644	16	B	7-93
C645	10	H	7-93
C646	10	H	7-93
C647	17	E	7-93
C648	12	D	7-93
C649	12	D	7-93
C650	12	D	7-93
C651	12	D	7-93
C652	12	D	7-93
C653	17	E	7-93
C654	12	E	7-93
C655	12	E	7-93
C656	12	E	7-93
C657	12	E	7-93
C658	12	E	7-93
C659	11	B	7-93
C660	11	B	7-93
C661	14	D	7-93
C662	14	B	7-93
C664	16	F	7-94
C665	12	D	7-94
C666	12	D	7-94
C667	12	D	7-94
CR601	2	A	7-93
CR602	7	B	7-94
E601	15	G	7-94
E602	10	F	7-94
HR601	13	F	7-94
J601	8	B	7-94
J602	3	G	7-94
J603	4	A	7-94
L601	15	E	7-94
L602	17	F	7-94
L603	2	A	7-93
L604	10	B	7-92
M601	7	C	7-94
R601	11	A	7-93
R602	3	C	7-94
R603	3	B	7-94
R604	4	B	7-94
R605	8	B	7-94
R606	8	B	7-94
R607	7	B	7-94
R608	5	F	7-94
R609	8	A	7-94
R610	8	H	7-92
R611	2	D	7-93
R612	2	E	7-93
R613	2	E	7-93
R614	2	D	7-93
R615	2	E	7-93
R616	2	D	7-93
R617	2	E	7-93
R618	2	D	7-93
R619	7	H	7-93
R620	6	H	7-93
R621	6	H	7-93
R622	6	H	7-93
R623	7	H	7-93
R624	7	H	7-93
R625	7	H	7-93
R626	7	E	7-93
R627	8	E	7-93
R628	7	H	7-93
R629	7	H	7-93
R630	7	H	7-93
R631	7	H	7-93
R632	7	H	7-93
R633	6	H	7-93
R634	8	E	7-93
R635	5	H	7-93
R636	6	H	7-93
R637	5	H	7-93
R638	5	H	7-93
R639	2	F	7-93
R640	2	F	7-93
R641	2	F	7-93
R642	5	H	7-93
R643	5	H	7-93
R644	2	F	7-93
R645	2	F	7-93
R646	2	F	7-93
R647	2	F	7-93
R648	2	E	7-93
R649	2	E	7-93
R650	2	F	7-93
R651	9	H	7-92
R652	7	E	7-93
R653	7	E	7-93
R654	7	E	7-93
R655	7	E	7-93
R656	6	H	7-93
R657	16	E	7-94
R658	6	C	7-93
R659	5	G	7-92
R660A	6	F	7-92
R660B	7	F	7-92
R661	14	B	7-92
R662	17	B	7-94
R663	15	D	7-94
R664	14	E	7-94
R665	16	B	7-94
R666	2	E	7-93
R667	2	E	7-93
R668	2	E	7-93
R669	2	E	7-93
R670	2	E	7-93
R671	4	H	7-92
R672	2	A	7-93
R673	6	D	7-93
R674	2	A	7-93
R675	2	B	7-93
R676	2	B	7-93
R677	8	H	7-93
R678	2	B	7-93
R679	2	A	7-93
R680	15	B	7-92
R681	15	B	7-92
R682	4	H	7-92
R683	16	H	7-92
R684	9	H	7-93
R685	6	H	7-92
R686	9	H	7-93
R687	9	H	7-93
R688	9	H	7-93
R689	14	B	7-92
R690	14	B	7-92
R691	10	G	7-92
R692	11	B	7-92
R693	12	B	7-92
R694	13	B	7-92
R695	12	B	7-92
R696	13	B	7-92
R697	13	B	7-92
R698	14	B	7-92
R699	14	B	7-92
R1601	11	B	7-92
R1602	11	B	7-92
R1603	11	B	7-92
R1604	11	B	7-92
R1605	11	B	7-92
R1606	10	B	7-92
R1607	10	B	7-92
R1608	10	B	7-92
R1609	10	B	7-92
R1610	9	F	7-92
R1611	14	E	7-92
R1612	13	E	7-92
R1613	10	B	7-92
R1614	9	B	7-92
R1615	9	B	7-92
R1616	8	B	7-92
R1617	8	G	7-92
R1618	5	F	7-92
R1619	5	B	7-92
R1620	7	B	7-92
R1621	7	B	7-92
R1622	5	B	7-92
R1623	5	B	7-92
R1624	5	B	7-92
R1625	5	B	7-92
R1626	7	B	7-92
R1627	4	B	7-92
R1628	4	B	7-92
R1629	7	G	7-92
R1630	5	C	7-92
R1632	7	B	7-92
R1633	7	E	7-93
R1634	13	E	7-93
R1635	2	D	7-93
R1636	2	C	7-93
R1637	2	C	7-93
R1638	2	C	7-93
R1639	2	C	7-93
R1640	2	C	7-93
R1641	2	C	7-93
R1642	2	B	7-93
R1643	2	B	7-93
R1644	2	B	7-93
R1645	2	B	7-93
R1646	2	B	7-93
R1647	8	H	7-93
R1648	10	H	7-93
R1649	10	H	7-93
R1650	10	H	7-93
R1651	11	H	7-93
R1652	11	H	7-93
R1653	8	H	7-93
R1654	8	H	7-93
R1655	12	G	7-92
R1656	10	H	7-93
R1657	10	F	7-93
R1658	9	H	7-93
R1659	9	H	7-93
R1660	13	D	7-93
R1661	13	D	7-93
R1662	13	D	7-93
R1663	13	D	7-93
R1664	17	E	7-93
R1665	11	H	7-93
R1666	11	H	7-93
R1667	17	E	7-93
R1668	17	E	7-93
R1669	11	F	7-93
R1670	12	E	7-93
R1671	11	H	7-93
R1672	11	H	7-93
R1673	11	H	7-93
R1674	11	H	7-93
R1675	11	H	7-93
R1676	11	H	7-92
R1677	12	D	7-93
R1678	17	E	7-93
R1679	17	D	7-93
R1680	17	E	7-93
R1681	17	E	7-93
R1682	11	B	7-93
R1683	11	B	7-93
R1684	17	D	7-93
R1685	17	D	7-93
R1686	17	D	7-93
R1687	14	H	7-92
R1688	17	E	7-93
R1689	13	G	7-92
R1690	17	D	7-93
R1691	11	B	7-93
R1692	11	B	7-93
R1693	14	G	7-92
R1694	15	G	7-92
R1695	15	G	7-92
R1698	16	G	7-92
R1697	17	D	7-93
R1598	17	D	7-93
R2601	13	H	7-92
R2602	17	D	7-93
R2603	11	D	7-94
R2604	11	D	7-94
R2605	11	D	7-94
R2606	11	D	7-94
R2607	12	F	7-94
R2608	12	F	7-94
R2609	12	F	7-94
R2610	12	F	7-94
R2611	12	F	7-94
R2612	12	F	7-94
R2613	11	F	7-94
R2614	11	F	7-94
R2615	13	F	7-94
R2616	12	F	7-94
R2617	4	C	7-94
R2618	2	F	7-94
R2619	14	B	7-94
R2620	4	B	7-92
R2621	3	D	7-93
R2622	8	B	7-93
R2623	15	D	7-93
R2624	12	D	7-94
R2625	4	C	7-93
R2626	8	B	7-92
R2627	7	F	7-94
R2628	11	F	7-94
R2629	11	F	7-94
R2630	11	E	7-94
R2631	11	E	7-94
R2632	11	E	7-94
R2634	11	D	7-94
R2636	13	E	7-94
R2637	13	E	7-94
S601	3	G	7-94
S602	6	C	7-94
S603	18	B	7-92
S604	7	B	7-94
S606	8	D	7-93
S607	9	B	7-93
S608A	3	D	7-94
S608B	4	D	7-94
S609	12	D	7-93
S610	11	C	7-94
S611	14	C	7-94
S612	15	E	7-94
S613A-B	6	E	7-94
S615	1	B	7-94
S616	2	B	7-94
S617	13	A	7-94
S618	14	A	7-94
ST1	11	A	7-93
ST2	11	A	7-93
ST3	11	C	7-93
T601	6	E	7-93
T602	10	E	7-92
T603	5	E	7-92
T604	13	D	7-94
T605	2	E	7-92
TE1	6	D	7-93
TE2	6	D	7-93
TE3	6	D	7-93
TE4	6	C	7-93
TE5	6	C	7-93
TE6	6	C	7-93
TE7	3	C	7-94
TE8	8	C	7-94
TE9	8	B	7-94
TE10	8	B	7-94
TP601	8	F	7-93
TP602	5	F	7-93
TP603	5	D	7-93
TP604	13	F	7-93
TP605	15	E	7-92
TP606	13	E	7-92
TP607	9	E	7-92
TP608	5	E	7-92
TP609	14	F	7-93
TP610	15	D	7-93
TP611	15	C	7-93
V609	17	F	7-94
XDS601	3	F	7-94
XDS602	3	E	7-94
XDS603	3	E	7-94
XDS604	3	E	7-94
XDS611	1	A	7-94
XI601	4	E	7-94
XI602	4	F	7-94
XI603	4	F	7-94
XI604	4	F	7-94
XI605	4	F	7-94
XI606	3	F	7-94
XI607	3	F	7-94
XI608	3	F	7-94
XI609	6	B	7-94
XI610	13	B	7-94
XV601	5	C	7-93
XV602	5	B	7-93
XV603	8	F	7-93
XV604	9	F	7-93
XV605	5	E	7-93
XV606	5	F	7-93
XV607	5	D	7-93
XV608	5	E	7-93
XV609	7	B	7-93
XV610	5	C	7-93
XV611	3	F	7-92
XV612	3	G	7-92
XV613	12	F	7-93
XV614	16	E	7-93
XV615	14	E	7-92
XV616	12	E	7-92
XV617	8	E	7-92
XV618	6	E	7-92
XV619	3	I	7-92
XV620	5	A	7-93
XV621	13	F	7-93
XV622	15	E	7-93
XV623	15	E	7-93
XV624	15	D	7-93
XV625	15	A	7-93
XV626	13	E	7-94
Z601	12	F	7-92
Z602	11	B	7-94
Z603	11	B	7-94
Z604	12	B	7-94
Z605	12	B	7-94
Z606	11	B	7-94

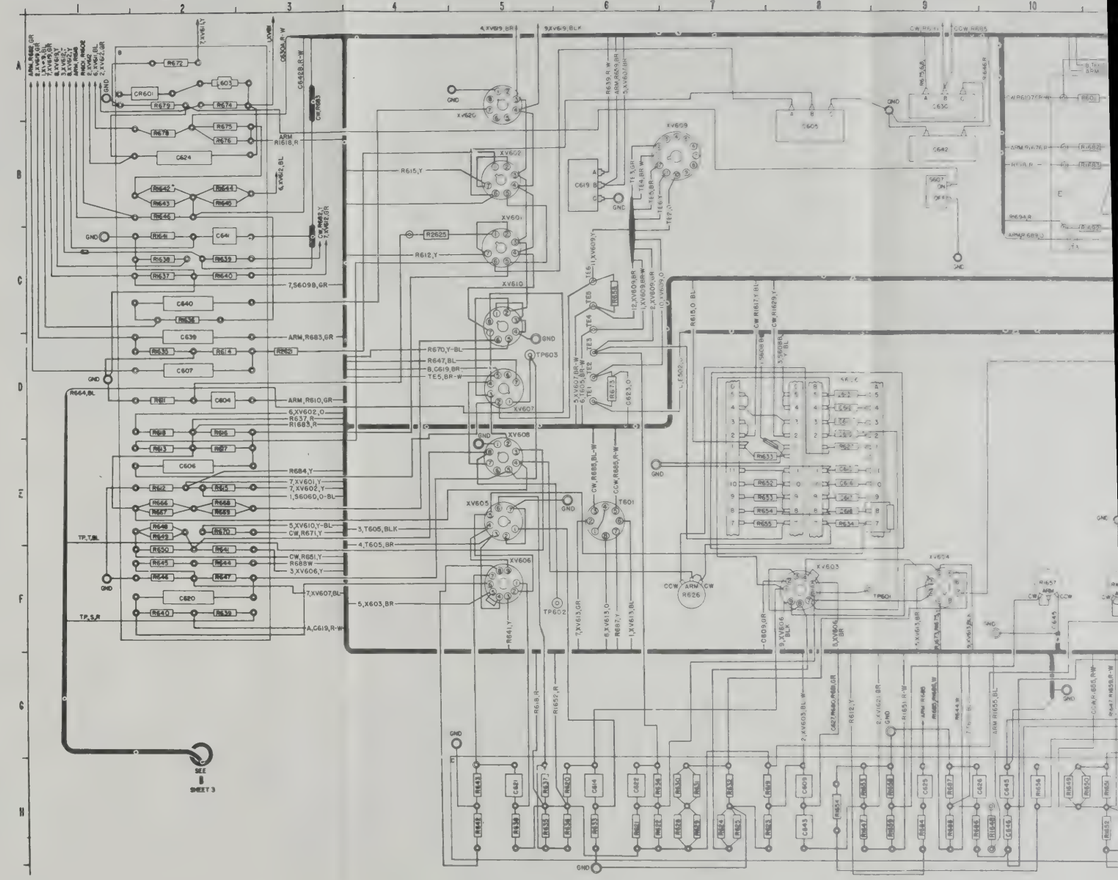

HORIZ	FIG. NO.
D	7-93
D	7-93
C	7-93
C	7-93
C	7-93
C	7-94
C	7-94
E	7-94
E	7-94
E	7-93
F	7-93
D	7-93
E	7-93
E	7-92
E	7-92
E	7-92
E	7-92
F	7-93
D	7-93
C	7-93
F	7-94
E	7-94
E	7-94
E	7-94
E	7-94
A	7-94
E	7-94
F	7-94
F	7-94
F	7-94
F	7-94
F	7-94
B	7-94
E	7-94
C	7-93
E	7-93
F	7-93
F	7-93
E	7-93
F	7-93
D	7-93
E	7-93
E	7-93
C	7-93
F	7-92
G	7-92
F	7-93
E	7-93
E	7-92
E	7-92
E	7-92
E	7-92
I	7-92
A	7-93
F	7-93
E	7-93
D	7-93
D	7-93
A	7-93
F	7-94
B	7-92
B	7-94
B	7-94
B	7-94
B	7-94
B	7-94

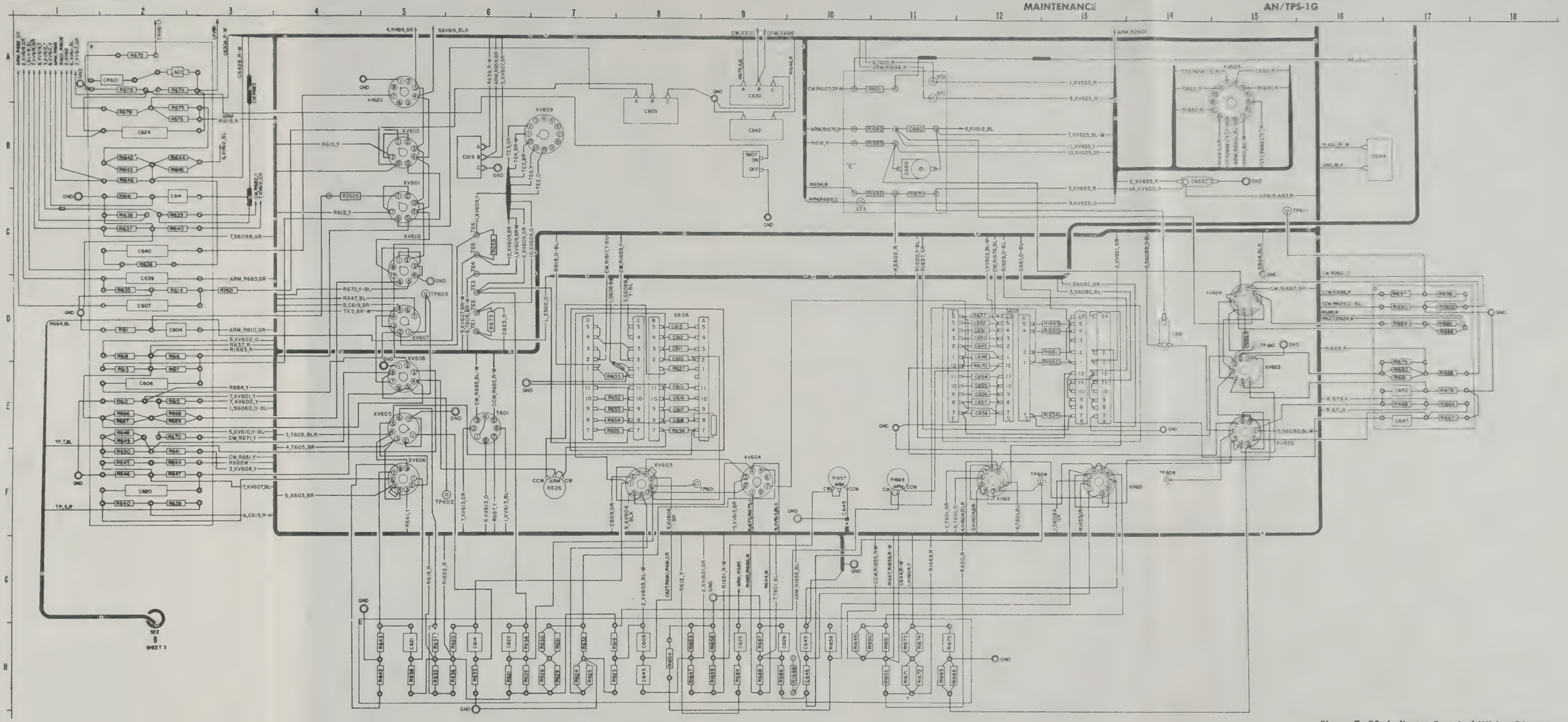

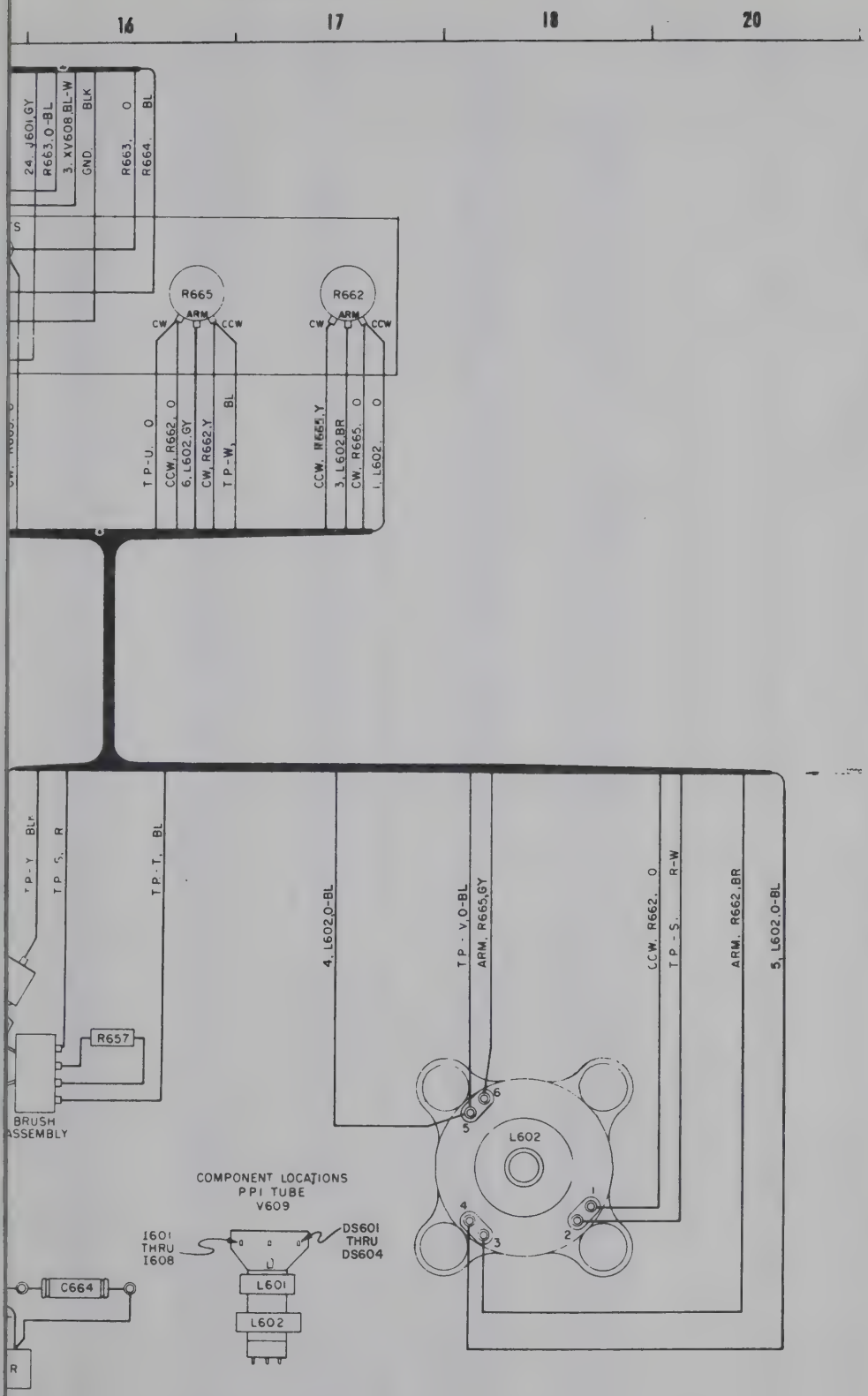

Figure 7—94. Indicator Practical Wiring Diagram (Panel and Mid-frame)

SYMBOL	VERT	HORIZ	FIG. NO.
B601	15	F	7-94
B602	14	F	7-94
C601	13	B	7-94
C602	14	B	7-94
C604	2	D	7-93
C605	8	B	7-93
C606	2	E	7-93
C607	2	D	7-93
C609	8	H	7-93
C610	8	D	7-93
C611	8	D	7-93
C612	8	D	7-93
C613	8	D	7-93
C614	6	H	7-93
C615	8	E	7-93
C616	8	E	7-93
C617	8	E	7-93
C618	8	E	7-93
C619	6	B	7-93
C620	2	F	7-93
C621	5	H	7-93
C622	6	H	7-93
C623	4	G	7-92
C624	2	B	7-93
C625	9	H	7-93
C626	9	H	7-93
C627	14	B	7-92
C628	13	B	7-92
C629	12	B	7-92
C630	9	A	7-93
C631	9	F	7-92
C632	9	B	7-92
C633	9	B	7-92
C634	8	B	7-92
C635	6	B	7-92
C636	6	B	7-92
C637	4	B	7-92
C638	7	B	7-92
C639	2	D	7-93
C640	2	C	7-93
C641	2	C	7-93
C642	9	B	7-93
C643	8	H	7-93
C644	16	B	7-93
C645	10	H	7-93
C646	10	H	7-93
C647	17	E	7-93
C648	12	D	7-93
C649	12	D	7-93
C650	12	D	7-93
C651	12	D	7-93
C652	12	D	7-93
C653	17	E	7-93
C654	12	E	7-93
C655	12	E	7-93
C656	12	E	7-93
C657	12	E	7-93
C658	12	E	7-93
C659	11	B	7-93
C660	11	B	7-93
C661	14	D	7-93
C662	14	B	7-93
C664	16	F	7-94
C665	12	D	7-94
C666	12	D	7-94
C667	12	D	7-94
CR601	2	A	7-93
CR602	7	B	7-94
E601	15	G	7-94
E602	10	F	7-94
HR601	13	F	7-94
J601	8	B	7-94
J602	3	G	7-94
J603	4	A	7-94
L601	15	E	7-94
L602	17	F	7-94
L603	2	A	7-93
L604	10	B	7-92
M601	7	C	7-94
R601	11	A	7-93
R602	3	C	7-94
R603	3	B	7-94
R604	4	B	7-94
R605	8	B	7-94
R606	8	B	7-94
R607	7	B	7-94
R608	5	F	7-94
R609	8	A	7-94
R610	8	H	7-92
R611	2	D	7-93
R612	2	E	7-93
R613	2	E	7-93
R614	2	D	7-93
R615	2	E	7-93
R616	2	D	7-93
R617	2	E	7-93
R618	2	D	7-93
R619	7	H	7-93
R620	6	H	7-93
R621	6	H	7-93
R622	6	H	7-93
R623	7	H	7-93
R624	7	H	7-93
R625	7	H	7-93
R626	7	E	7-93
R627	8	E	7-93
R628	7	H	7-93
R629	7	H	7-93
R630	7	H	7-93
R631	7	H	7-93
R632	7	H	7-93
R633	6	H	7-93
R634	8	E	7-93
R635	5	H	7-93
R636	6	H	7-93
R637	5	H	7-93
R638	5	H	7-93
R639	2	F	7-93
R640	2	F	7-93
R641	2	F	7-93
R642	5	H	7-93
R643	5	H	7-93
R644	2	F	7-93
R645	2	F	7-93
R646	2	F	7-93
R647	2	F	7-93
R648	2	E	7-93
R649	2	E	7-93
R650	2	F	7-93
R651	9	H	7-92
R652	7	E	7-93
R653	7	E	7-93
R654	7	E	7-93
R655	7	E	7-93
R656	6	H	7-93
R657	16	E	7-94
R658	6	C	7-93
R659	5	G	7-92
R660A	6	F	7-92
R660B	7	F	7-92
R661	14	B	7-92
R662	17	B	7-94
R663	15	D	7-94
R664	14	E	7-94
R665	16	B	7-94
R666	2	E	7-93
R667	2	E	7-93
R668	2	E	7-93
R669	2	E	7-93
R670	2	E	7-93
R671	4	H	7-92
R672	2	A	7-93
R673	6	D	7-93
R674	2	A	7-93
R675	2	B	7-93
R676	2	B	7-93
R678	2	B	7-93
R679	2	A	7-93
R680	15	B	7-92
R681	15	B	7-92
R682	4	H	7-92
R683	16	H	7-92
R684	9	H	7-93
R685	6	H	7-92
R686	9	H	7-93
R687	9	H	7-93
R688	9	H	7-93
R689	14	B	7-92
R690	14	B	7-92
R691	10	G	7-92
R692	11	B	7-92
R693	12	B	7-92
R694	13	B	7-92
R695	12	B	7-92
R696	13	B	7-92
R697	13	B	7-92
R698	14	B	7-92
R699	14	B	7-92
R1601	11	B	7-92
R1602	11	B	7-92
R1603	11	B	7-92
R1604	11	B	7-92
R1605	11	B	7-92
R1606	10	B	7-92
R1607	10	B	7-92
R1608	10	B	7-92
R1609	10	B	7-92
R1610	9	F	7-92
R1611	14	E	7-92
R1612	13	E	7-92
R1613	10	B	7-92
R1614	9	B	7-92
R1615	9	B	7-92
R1616	8	B	7-92
R1617	8	G	7-92
R1618	5	F	7-92
R1619	5	B	7-92
R1620	7	B	7-92
R1621	7	B	7-92
R1622	5	B	7-92
R1623	5	B	7-92
R1624	5	B	7-92
R1625	5	B	7-92
R1626	7	B	7-92
R1627	4	B	7-92
R1628	4	B	7-92
R1629	7	G	7-92
R1630	5	C	7-92
R1632	7	B	7-92
R1633	7	E	7-93
R1634	13	E	7-93
R1635	2	D	7-93
R1636	2	C	7-93
R1637	2	C	7-93
R1638	2	C	7-93
R1639	2	C	7-93
R1640	2	C	7-93
R1641	2	C	7-93
R1642	2	B	7-93
R1643	2	B	7-93
R1644	2	B	7-93
R1645	2	B	7-93
R1646	2	B	7-93
R1647	8	H	7-93
R1648	10	H	7-93
R1649	10	H	7-93
R1650	10	H	7-93
R1651	11	H	7-93
R1652	11	H	7-93
R1653	8	H	7-93
R1654	8	H	7-93
R1655	12	G	7-92
R1656	10	H	7-93
R1657	10	F	7-93
R1658	9	H	7-93
R1659	9	H	7-93
R1660	13	D	7-93
R1661	13	D	7-93
R1662	13	D	7-93
R1663	13	D	7-93
R1664	17	E	7-93
R1665	11	H	7-93
R1666	11	H	7-93
R1667	17	E	7-93
R1668	17	E	7-93
R1669	11	F	7-93
R1670	12	E	7-93
R1671	11	H	7-93
R1672	11	H	7-93
R1673	11	H	7-93
R1674	11	H	7-93
R1675	11	H	7-93
R1676	11	H	7-93
R1677	12	D	7-93
R1678	17	E	7-93
R1679	17	D	7-93
R1680	17	E	7-93
R1681	17	E	7-93
R1682	11	B	7-93
R1683	11	B	7-93
R1684	17	D	7-93
R1685	17	D	7-93
R1686	17	D	7-93
R1687	14	H	7-92
R1688	17	E	7-93
R1689	13	G	7-92
R1690	17	D	7-93
R1691	11	B	7-93
R1692	11	B	7-93
R1693	14	G	7-92
R1694	15	G	7-92
R1695	15	G	7-92
R1696	16	G	7-92
R1697	17	D	7-93
R1698	17	D	7-93
R2601	13	H	7-92
R2602	17	D	7-93
R2603	11	D	7-94
R2604	11	D	7-94
R2605	11	D	7-94
R2606	11	D	7-94
R2607	12	F	7-94
R2608	12	F	7-94
R2609	12	F	7-94
R2610	12	F	7-94
R2611	12	F	7-94
R2612	12	F	7-94
R2613	11	F	7-94
R2614	11	F	7-94
R2615	13	F	7-94
R2616	12	F	7-94
R2617	4	C	7-94
R2618	2	F	7-94
R2619	14	B	7-92
R2620	4	B	7-92
R2621	3	D	7-93
R2622	8	B	7-93
R2623	15	D	7-93
R2624	12	D	7-94
R2625	4	C	7-93
R2626	8	B	7-92
R2627	7	F	7-94
R2628	11	F	7-94
R2629	11	F	7-94
R2630	11	E	7-94
R2631	11	E	7-94
R2632	11	E	7-94
R2634	11	D	7-94
R2636	13	E	7-94
R2637	13	E	7-94
S601	3	G	7-94
S602	6	C	7-94
S603	18	B	7-92
S604	7	B	7-94
S605	8	D	7-93
S606	8	D	7-93
S607	9	B	7-93
S608A	3	D	7-94
S608B	4	D	7-94
S609	12	D	7-93
S610	11	C	7-94
S611	14	C	7-94
S612	15	E	7-94
S613A-B	6	E	7-94
S615	1	B	7-94
S616	2	B	7-94
S617	13	A	7-94
S618	14	A	7-94
ST1	11	A	7-93
ST2	11	A	7-93
ST3	11	C	7-93
T601	6	E	7-93
T602	10	E	7-92
T603	5	E	7-92
T604	13	D	7-94
T605	2	E	7-92
TE1	6	D	7-93
TE2	6	D	7-92
TE3	6	D	7-93
TE4	6	C	7-93
TE5	6	C	7-93
TE6	6	C	7-93
TE7	3	C	7-94
TE8	8	C	7-94
TE9	8	B	7-94
TE10	8	B	7-94
TP601	8	F	7-93
TP602	5	F	7-93
TP603	5	D	7-93
TP604	13	F	7-93
TP605	15	E	7-92
TP606	13	E	7-92
TP607	9	E	7-92
TP608	5	E	7-92
TP609	14	F	7-93
TP610	15	D	7-93
TP611	15	C	7-93
V609	17	F	7-94
XDS601	3	F	7-94
XDS602	3	E	7-94
XDS603	3	E	7-94
XDS604	3	E	7-94
XDS611	1	A	7-94
X1601	4	E	7-94
X1602	4	F	7-94
X1603	4	F	7-94
X1604	4	F	7-94
X1605	4	F	7-94
X1606	3	F	7-94
X1607	3	F	7-94
X1608	3	F	7-94
XV601	5	C	7-93
XV602	5	B	7-93
XV603	8	F	7-93
XV604	9	F	7-93
XV605	5	E	7-93
XV606	5	F	7-93
XV607	5	D	7-93
XV608	5	E	7-93
XV609	7	B	7-93
XV610	5	C	7-93
XV611	3	F	7-92
XV612	3	G	7-92
XV613	12	F	7-93
XV614	16	E	7-93
XV615	14	E	7-92
XV616	12	E	7-92
XV617	8	E	7-92
XV618	6	E	7-92
XV619	3	I	7-92
XV620	5	A	7-93
XV621	13	F	7-93
XV622	15	E	7-93
XV623	15	E	7-93
XV624	15	D	7-93
XV625	15	A	7-93
XV626	13	E	7-94
Z601	12	F	7-92
Z602	11	B	7-94
Z603	11	B	7-94
Z604	12	B	7-94
Z605	12	B	7-94
Z606	11	B	7-94

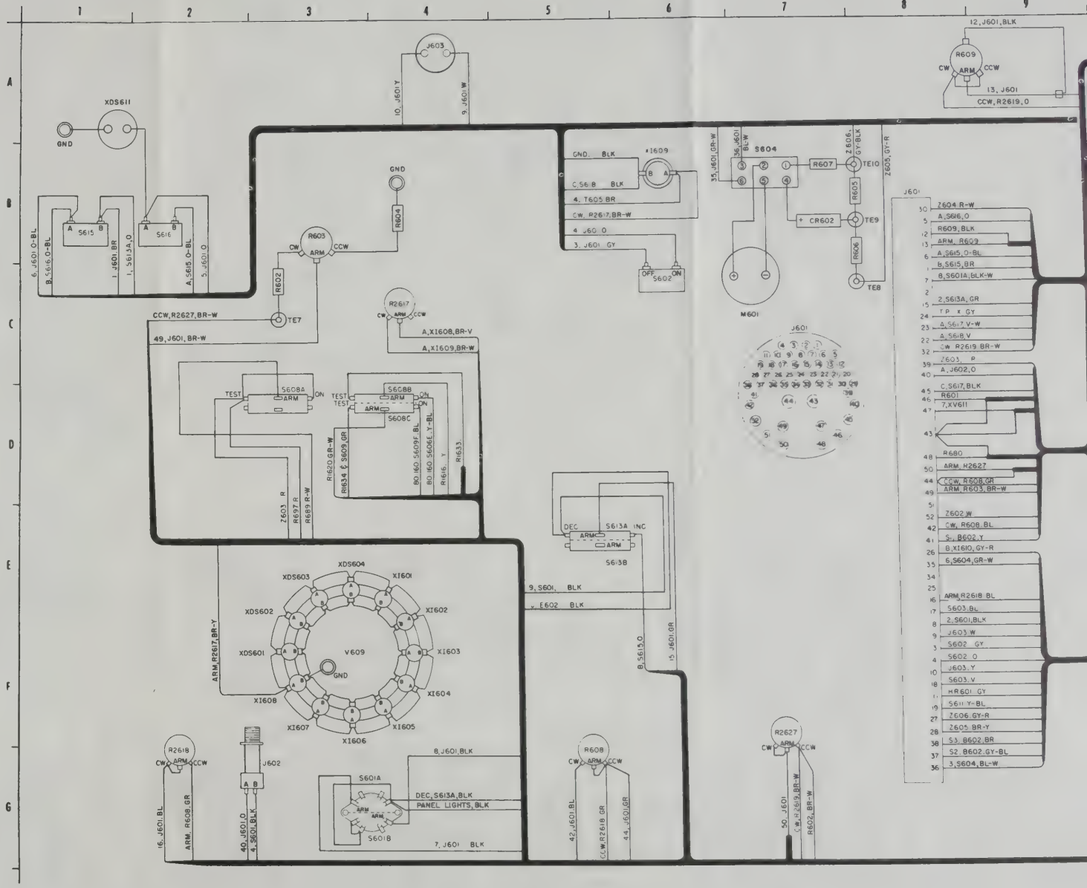

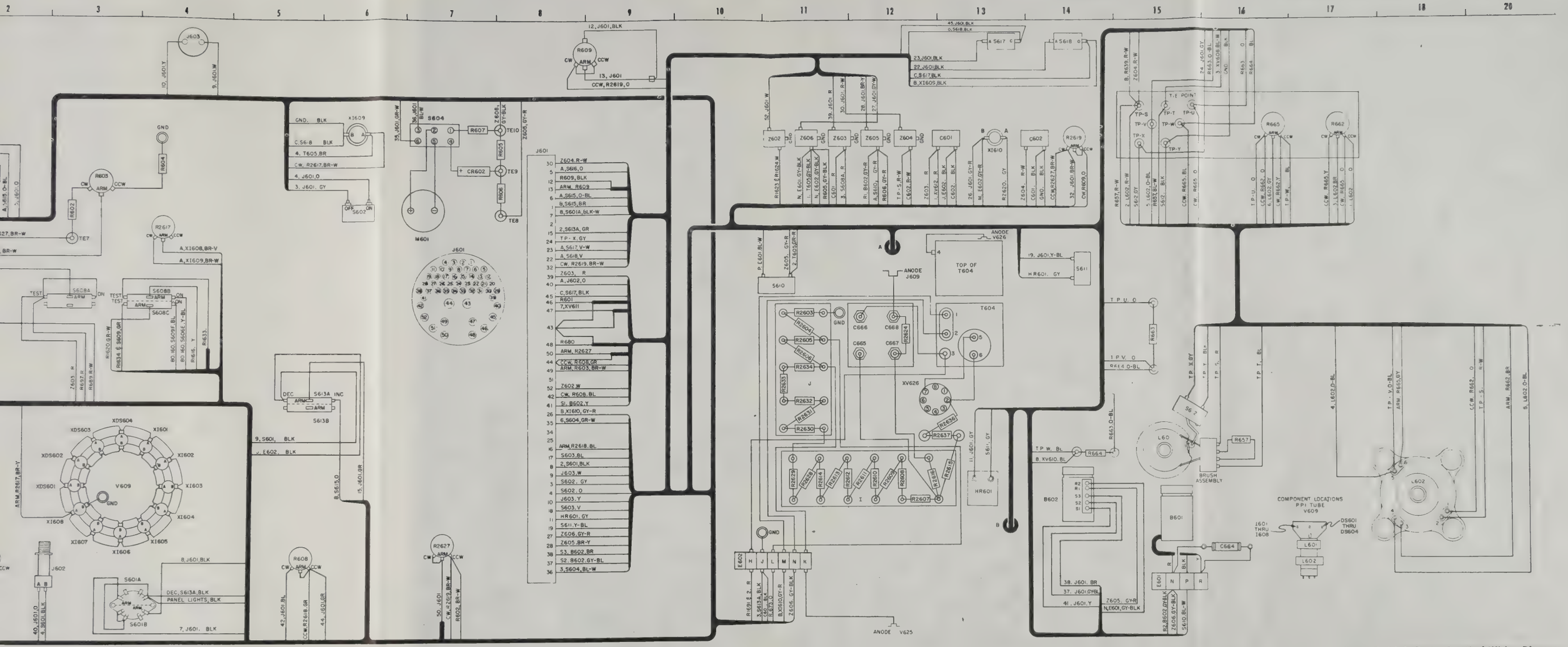

Figure 7–94. Indicator Practical Wiring Diagram (Panel and Mid-frame)

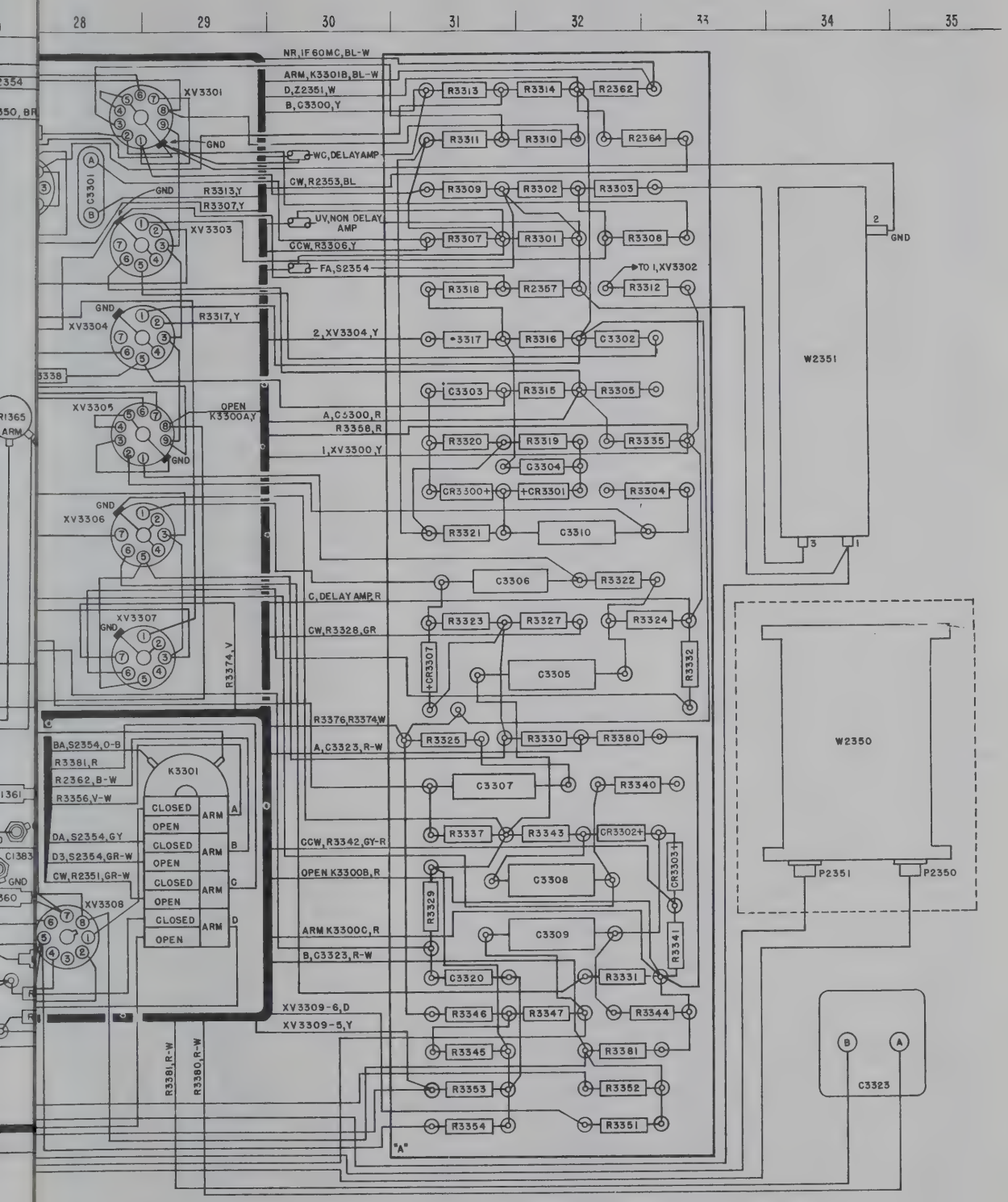

Figure 7–95. Signal Comparator Practical Wiring Diagram (Main Chassis)

SYMBOL	VERT	HORIZ	FIG. NO.
B2350	27	I	7-95
C301	4	A	7-96
C302	6	A	7-96
C303	4	A	7-96
C304	6	A	7-96
C305	5	B	7-96
C306	5	B	7-96
C307	6	A	7-96
C308	4	A	7-96
C309	4	B	7-96
C310	6	B	7-96
C311	6	B	7-96
C312	6	B	7-96
C313	4	C	7-96
C314	4	C	7-96
C315	6	B	7-96
C316	6	C	7-96
C317	5	C	7-96
C318	6	C	7-96
C319	4	D	7-96
C320	4	C	7-96
C321	6	C	7-96
C322	5	D	7-96
C323	6	D	7-96
C324	4	D	7-96
C325	4	D	7-96
C326	6	D	7-96
C327	5	E	7-96
C328	6	E	7-96
C329	4	E	7-96
C330	4	E	7-96
C331	6	E	7-96
C332	4	E	7-96
C333	4	G	7-96
C334	6	G	7-96
C335	4	G	7-96
C336	4	H	7-96
C337	4	G	7-96
C338	6	H	7-96
C339	4	H	7-96
C340	6	G	7-96
C341	5	H	7-96
C342	4	H	7-96
C350	1	B	7-96
C351	3	B	7-96
C352	1	B	7-96
C353	1	C	7-96
C354	3	C	7-96
C355	2	C	7-96
C356	1	P	7-96
C357	3	C	7-96
C358	3	D	7-96
C359	3	D	7-96
C360	2	D	7-96
C361	2	D	7-96
C362	2	E	7-96
C363	2	F	7-96
C364	1	E	7-96
C365	1	F	7-96
C366	3	F	7-96
C367	1	F	7-96
C368	1	G	7-96
C369	2	G	7-96
C370	2	G	7-96
C371	3	E	7-96
C372	3	F	7-96
C373	3	G	7-96
C374	4	F	7-96
C375	4	F	7-96
C376	4	F	7-96
C377	4	F	7-96
C378	5	G	7-96
C379	4	F	7-96
C380	6	F	7-96
C1301	11	B	7-96
C1302	11	B	7-96
C1303	13	B	7-96
C1304	14	B	7-96
C1305	11	C	7-96
C1306	12	B	7-96
C1307	14	B	7-96
C1308	14	C	7-96
C1309	11	D	7-96
C1310	12	C	7-96
C1311	11	C	7-96
C1312	14	C	7-96
C1313	11	D	7-96
C1314	12	D	7-96
C1315	11	C	7-96
C1316	14	D	7-96
C1317	14	D	7-96
C1318	11	E	7-96
C1319	12	E	7-96
C1320	11	D	7-96
C1321	14	D	7-96
C1322	14	E	7-96
C1323	14	E	7-96
C1324	12	F	7-96
C1325	14	G	7-96
C1326	12	G	7-96
C1327	11	G	7-96
C1328	11	G	7-96
C1329	12	G	7-96
C1330	12	G	7-96
C1350	3	A	7-95
C1351	8	A	7-95
C1352	5	B	7-95
C1353	3	B	7-95
C1354	6	B	7-95
C1355	5	C	7-95
C1356	8	B	7-95
C1357	8	E	7-95
C1358	3	C	7-95
C1359	7	C	7-95
C1360	2	D	7-95
C1361	2	E	7-95
C1362	3	D	7-95
C1363	3	D	7-95
C1364	7	D	7-95
C1365	2	F	7-95
C1366	3	F	7-95
C1367	4	C	7-95
C1368	7	E	7-95
C1369	9	E	7-95
C1370	6	E	7-95
C1371	2	G	7-95
C1372	3	G	7-95
C1373	7	F	7-95
C1374	7	F	7-95
C1375	10	H	7-95
C1376	9	F	7-95
C1377	9	F	7-95
C1378	7	G	7-95
C1379	6	F	7-95
C1380	9	G	7-95
C1381	9	H	7-95
C1382	7	G	7-95
C1383	9	G	7-95
C1384	10	H	7-95
C1385	6	H	7-95
CR3307	31	F	7-95
CR3308	23	C	7-95
E2350	32	F	7-95
E2351	16	G	7-95
E2352	32	H	7-95
HR2350	33	F	7-95
HR2351	1	C	7-95
J302	11	C	7-95
J303	11	C	7-95
J304	11	B	7-95
J305	11	B	7-95
J306	11	B	7-95
J307	5	A	7-96
J308	5	G	7-96
J310	23	B	7-95
J350	1	A	7-96
J351	2	C	7-96
J1301	12	A	7-96
J2301	8	A	7-96
J2354	21	F	2-95
K3300	27	F	2-95
K3301	29	F	2-95
L301	6	B	7-96
L302	4	A	7-96
L303	4	C	7-96
L304	6	C	7-96
L305	6	D	7-96
L306	6	E	7-96
L307	6	H	7-96
L308	6	H	7-96
L350	3	B	7-96
L351	1	C	7-96
L352	2	C	7-96
L353	2	D	7-96
L354	1	E	7-96
L355	1	F	7-96
L356	3	F	7-96
L357	1	F	7-96
L358	2	G	7-96
L359	2	E	7-96
L360	3	G	7-96
L1301	12	B	7-96
L1302	11	B	7-96
L1303	12	B	7-96
L1304	13	B	7-96
L1306	13	C	7-96
L1307	12	D	7-96
L1308	13	C	7-96
L1309	12	E	7-96
L1310	13	D	7-96
L1311	13	G	7-96
L1312	13	G	7-96
L1350	7	A	7-95
L1351	7	B	7-95
L1352	3	D	7-95
L1353	7	C	7-95
L1354	7	D	7-95
L1355	6	E	7-95
L1356	2	G	7-95
L1357	7	E	7-95
L1358	7	F	7-95
L1359	9	E	7-95
L1360	9	G	7-95
L1361	9	G	7-95
L1362	7	H	7-95
L1363	9	H	7-98
L1364	9	H	7-95
L1365	9	H	7-95
L1367	9	H	7-95
L2301	9	C	7-96
L2302	9	B	7-96
L2303	9	C	7-96
L2304	9	C	7-96
L2305	9	D	7-96
L2306	9	D	7-96
L2307	9	E	7-96
L2308	9	D	7-96
L2309	9	G	7-96
L2310	9	G	7-96
L2311	7	A	7-96
M2350	17	E	7-95
P307	12	C	7-95
P308	12	E	7-95
P350	11	D	7-95
P351	11	E	7-95
P1301	20	H	7-95
P2301	17	H	7-95
P2350	35	G	7-95
P2351	34	G	7-95
P/J1350	10	G	7-95
R301	4	A	7-96
R302	5	A	7-96
R303	4	B	7-96
R304	5	B	7-96
R305	5	B	7-96
R306	6	B	7-96
R307	5	C	7-96
R308	6	B	7-96
R309	4	C	7-96
R310	6	C	7-96
R311	4	C	7-96
R312	5	D	7-96
R313	5	D	7-96
R314	6	C	7-96
R315	6	D	7-96
R316	6	E	7-96
R317	5	E	7-96
R318	6	D	7-96
R319	6	E	7-96
R320	6	E	7-96
R321	5	E	7-96
R322	6	E	7-96
R323	4	G	7-96
R324	6	G	7-96
R325	6	G	7-96
R326	6	G	7-96
R327	4	G	7-96
R329	4	H	7-96
R330	6	H	7-96
R331	5	G	7-96
R332	4	A	7-96
R335	5	F	7-96
R336	4	F	7-96
R337	4	F	7-96
R338	6	F	7-96
R339	5	G	7-96
R340	6	E	7-96
R350	1	B	7-96
R351	2	B	7-96
R352	2	B	7-96
R353	1	C	7-96
R354	1	C	7-96
R355	3	B	7-96
R356	2	C	7-96
R357	3	E	7-96
R358	1	F	7-96
R359	2	G	7-96
R360	2	E	7-96
R1301	13	B	7-96
R1302	13	B	7-96
R1303	11	B	7-96
R1304	11	B	7-96
R1305	12	B	7-96
R1306	13	B	7-96
R1307	11	C	7-96
R1308	11	C	7-96
R1309	12	B	7-96
R1310	13	C	7-96
R1311	11	D	7-96
R1312	11	D	7-96
R1313	12	C	7-96
R1315	11	D	7-96
R1318	13	D	7-96
R1319	12	E	7-96
R1320	12	D	7-96
R1321	12	F	7-96
R1322	12	F	7-96
R1323	11	G	7-96
R1324	12	G	7-96
R1325	11	G	7-96
R1350	3	B	7-95
R1351	2	A	7-96
R1352	2	B	7-95
R1353	3	C	7-95
R1354	2	B	7-95
R1355	1	C	7-95
R1356	2	C	7-95
R1357	3	C	7-95
R1358	2	C	7-95
R1359	2	D	7-95
R1360	3	D	7-95
R1361	2	E	7-95
R1362	2	E	7-95
R1363	3	F	7-95
R1364	2	F	7-95
R1365	9	D	7-95
R1366	3	G	7-95
R1367	3	F	7-95
R1368	7	E	7-95
R1369	3	G	7-95
R1370	8	E	7-95
R1371	5	G	7-95
R1372	8	F	7-95
R1373	7	F	7-95
R1374	6	G	7-95
R1375	6	G	7-95
R1376	6	H	7-95
R1377	6	G	7-95
R1378	8	G	7-95
R1379	8	H	7-95
R1380	8	I	7-95
R1381	9	H	7-95
R1382	9	H	7-95
R1383	7	H	7-95
R1384	6	G	7-95
R1385	9	H	7-95
R2301	8	B	7-96
R2302	9	B	7-96
R2303	9	B	7-96
R2304	8	B	7-96
R2305	7	B	7-96
R2306	8	B	7-96
R2307	9	B	7-96
R2308	10	B	7-96
R2309	8	C	7-96
R2310	8	C	7-96
R2311	9	B	7-96
R2312	10	C	7-96
R2313	8	D	7-96
R2314	8	D	7-96
R2315	9	C	7-96
R2316	10	D	7-96
R2317	8	E	7-96
R2318	8	E	7-96
R2319	9	D	7-96
R2320	10	E	7-96
R2321	8	E	7-96
R2322	9	E	7-96
R2323	8	F	7-96
R2324	8	F	7-96
R2325	8	G	7-96
R2326	8	G	7-96
R2350	17	B	7-95
R2351	18	B	7-95
R2352	18	B	7-95
R2353	19	B	7-95
R2354	20	B	7-95
R2355	21	B	7-95
R2356	21	B	7-95
R2357	32	C	7-95
R2358	12	F	7-95
R2362	32	A	7-95
R2363	11	F	7-95
R2364	33	A	7-95
R3301	32	B	7-95
R3302	32	B	7-95
R3303	32	B	7-95
R3304	33	D	7-95
R3305	32	C	7-95
R3306	37	B	7-95
R3307	31	B	7-95
R3308	38	B	7-95
R3309	31	B	7-95
R3310	32	A	7-95
R3311	31	A	7-95
R3312	33	C	7-95
R3313	31	A	7-95
R3314	32	A	7-95
R3315	32	C	7-95
R3316	31	C	7-95
R3317	32	C	7-95
R3318	31	E	7-95
R3319	32	D	7-95
R3320	31	D	7-95
R3321	31	E	7-95
R3322	32	E	7-95
R3323	31	E	7-95
R3324	32	E	7-95
R3325	31	F	7-95
R3327	30	F	7-95
R3326	32	E	7-95
R3328	22	B	7-95
R3329	31	H	7-95
R3330	32	H	7-95
R3331	32	H	7-95
R3332	33	F	7-95
R3333	27	F	7-95
R3334	24	C	7-95
R3335	33	D	7-95
R3336	24	D	7-95
R3337	31	G	7-95
R3338	28	C	7-95
R3339	24	C	7-95
R3340	32	G	7-95
R3341	33	H	7-95
R3342	27	C	7-95
R3343	32	G	7-95
R3344	33	H	7-95
R3345	31	I	7-95
R3346	31	H	7-95
R3347	32	H	7-95
R3348	26	H	7-95
R3350	26	H	7-95
R3351	32	I	7-95
R3352	32	I	7-95
R3353	31	I	7-95
R3354	31	I	7-95
R3355	24	D	7-95
R3356	23	F	7-95
R3357	23	C	7-95
R3358	23	C	7-95
R3360	23	H	7-95
R3363	24	E	7-95
R3364	23	E	7-95
R3365	23	F	7-95
R3366	24	F	7-95
R3367	24	F	7-95
R3369	23	E	7-95
R3370	24	F	7-95
R3371	24	F	7-95
R3372	23	G	7-95
R3373	23	G	7-95
R3374	23	F	7-95
R3375	24	F	7-95
R3376	23	F	7-95
R3378	25	G	7-95
R3380	32	F	7-95
R3381	32	I	7-95
R3382	18	H	7-95
S2351	7	I	7-95
S2352	6	I	7-95
S2353	18	C	7-15
S2354	20	D	7-95
S2355	11	I	7-95
T301	5	G	7-95
T302	5	F	7-96
T2350	13	H	7-95
TP301	11	B	7-95
W2350	34	F	7-95
W2351	34	C	7-95
XV301	5	A	7-96
XV302	5	B	7-96
XV303	5	C	7-96
XV304	5	C	7-96
XV305	5	D	7-96
XV306	5	E	7-96
XV307	5	H	7-96
XV308	5	H	7-96
XV350	2	B	7-96
XV351	2	C	7-96
XV352	2	D	7-96
XV353	2	E	7-96
XV354	1	F	7-96
XV1301	12	B	7-96
XV1302	12	C	7-96
XV1303	12	C	7-96
XV1304	12	D	7-96
XV1305	12	E	7-96
XV1306	12	F	7-96
XV1350	6	A	7-95
XV1351	6	B	7-95
XV1352	6	C	7-95
XV1353	6	D	7-95
XV1354	6	E	7-95
XV1355	8	E	7-95
XV1356	8	G	7-95
XV1357	8	G	7-95
XV2301	8	B	7-96
XV2302	9	C	7-96
XV2303	8	D	7-96
XV2304	8	D	7-96
XV2305	8	E	7-96
XV2306	8	G	7-96
XV3300	26	A	7-95
XV3301	29	A	7-95
XV3302	27	B	7-95
XV3303	29	B	7-95
XV3304	28	C	7-95
XV3305	28	D	7-95
XV3306	28	D	7-95
XV3307	28	E	7-95
XV3308	28	H	7-95
XV3309	25	H	7-95
XV3310	27	D	7-95
XV3311	26	E	7-95
XV3312	26	D	7-95
Z2350	11	H	7-95
Z2351	15	D	7-95
Z3301	23	A	7-95

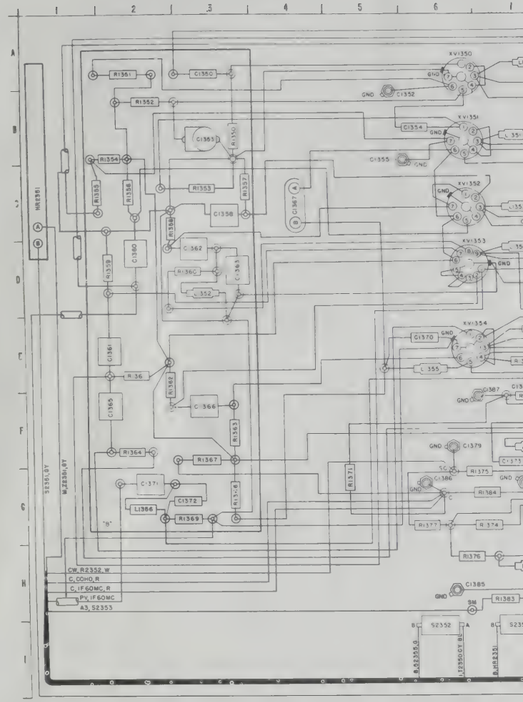

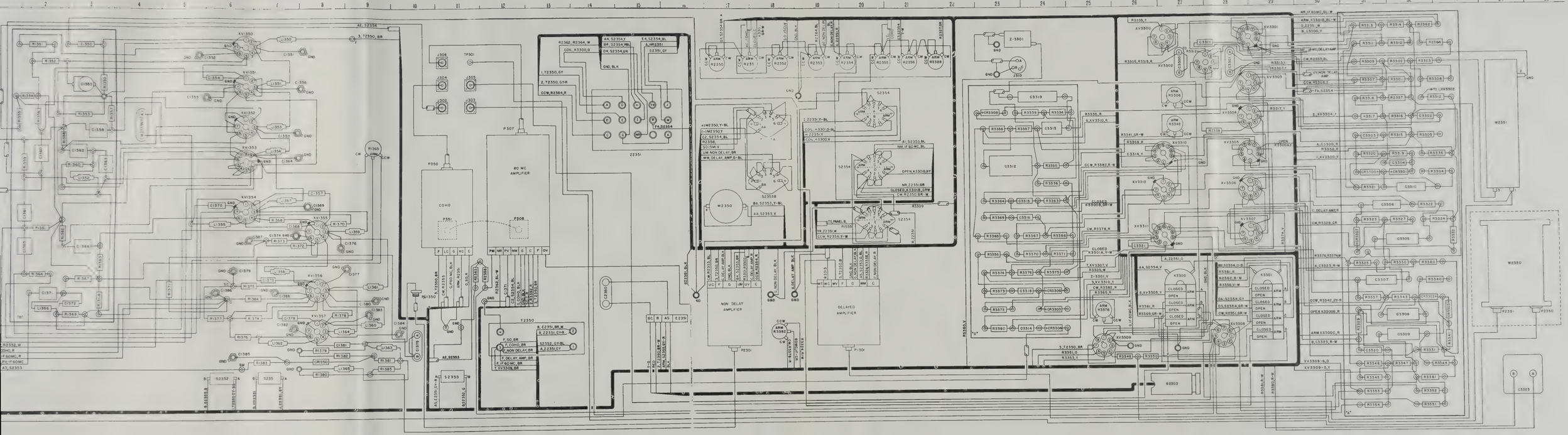

Figure 7—95. Signal Comparator Practical Wiring Diagram (Main Chassis)

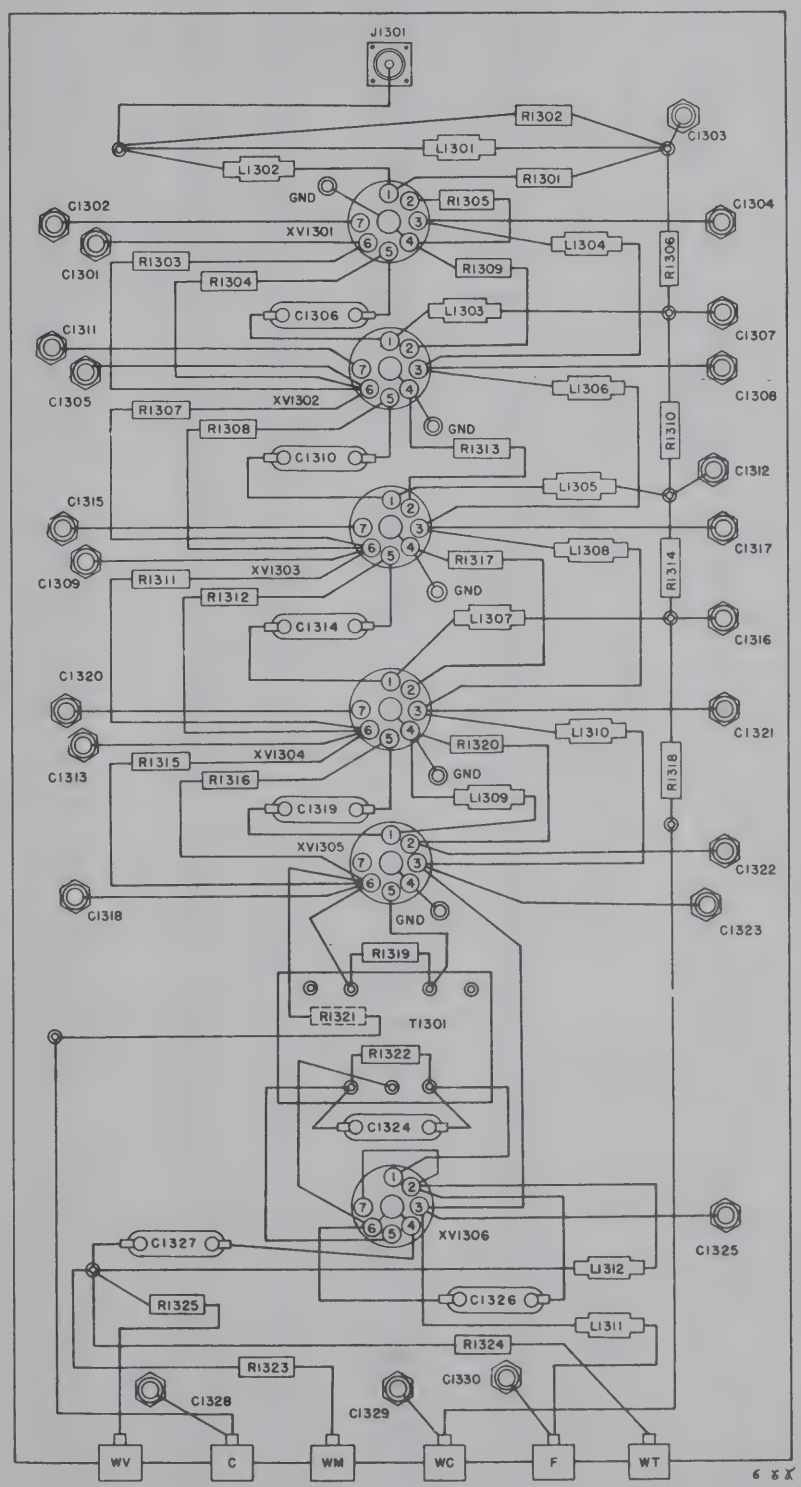

Figure 7–96. Signal Comparator Practical Wiring Diagram (Subchassis)

SYMBOL	VERT	HORIZ	FIG. NO.
B2350	27	I	7-95
C301	4	A	7-96
C302	6	A	7-96
C303	4	A	7-96
C304	6	A	7-96
C305	5	B	7-96
C306	5	B	7-96
C307	6	A	7-96
C308	4	A	7-96
C309	4	B	7-96
C310	6	B	7-96
C311	6	B	7-96
C312	6	B	7-96
C313	4	C	7-96
C314	4	C	7-96
C315	6	B	7-96
C316	6	C	7-96
C317	5	C	7-96
C318	6	C	7-96
C319	4	D	7-96
C320	4	C	7-96
C321	6	C	7-96
C322	5	D	7-96
C323	6	D	7-96
C324	4	D	7-96
C325	4	D	7-96
C326	6	D	7-96
C327	5	E	7-96
C328	6	E	7-96
C329	4	E	7-96
C330	4	E	7-96
C331	6	E	7-96
C332	4	E	7-96
C333	4	G	7-96
C334	6	G	7-96
C335	4	G	7-96
C336	4	H	7-96
C337	4	G	7-96
C338	6	H	7-96
C339	4	H	7-96
C340	6	G	7-96
C341	5	H	7-96
C342	4	H	7-96
C350	1	B	7-96
C351	3	B	7-96
C352	1	B	7-96
C353	1	C	7-96
C354	3	C	7-96
C355	2	C	7-96
C356	1	P	7-96
C357	3	C	7-96
C358	3	D	7-96
C359	3	D	7-96
C360	2	D	7-96
C361	2	D	7-96
C362	2	E	7-96
C363	2	F	7-96
C364	1	E	7-96
C365	1	F	7-96
C366	3	F	7-96
C367	1	F	7-96
C368	1	G	7-96
C369	2	G	7-96
C370	2	G	7-96
C371	3	E	7-96
C372	3	F	7-96
C373	3	G	7-96
C374	4	F	7-96
C375	4	F	7-96
C376	4	F	7-96
C377	4	F	7-95
C378	5	G	7-96
C379	4	F	7-96
C380	6	F	7-96
C1301	11	B	7-96
C1302	11	B	7-96
C1303	13	B	7-96
C1304	14	B	7-96
C1305	11	C	7-96
C1306	12	B	7-96
C1307	14	B	7-96
C1308	14	C	7-96
C1309	11	D	7-96
C1310	12	C	7-96
C1311	11	C	7-96
C1312	14	C	7-96
C1313	11	D	7-96
C1314	12	D	7-96
C1315	11	C	7-96
C1316	14	D	7-96
C1317	14	D	7-96
C1318	11	E	7-96
C1319	12	E	7-96
C1320	11	D	7-96
C1321	14	D	7-96
C1322	14	E	7-96
C1323	14	E	7-96
C1324	12	F	7-96
C1325	14	G	7-96
C1326	12	G	7-96
C1327	11	G	7-96
C1328	11	G	7-96
C1329	12	G	7-96
C1330	12	G	7-96
C1350	3	A	7-95
C1351	8	A	7-95
C1352	5	B	7-95
C1353	3	B	7-95
C1354	6	B	7-95
C1355	5	C	7-95
C1356	8	B	7-95
C1357	8	E	7-95
C1358	3	C	7-95
C1359	7	C	7-95
C1360	2	D	7-95
C1361	2	E	7-95
C1362	3	D	7-95
C1363	3	D	7-95
C1364	7	D	7-95
C1365	2	F	7-95
C1366	3	F	7-95
C1367	4	C	7-95
C1368	7	E	7-95
C1369	9	E	7-95
C1370	6	E	7-95
C1371	2	G	7-95
C1372	3	G	7-95
C1373	7	F	7-95
C1374	7	F	7-95
C1375	10	H	7-95
C1376	9	F	7-95
C1377	9	F	7-95
C1378	7	G	7-95
C1379	6	F	7-95
C1380	9	G	7-95
C1381	9	H	7-95
C1382	7	G	7-95
C1383	9	G	7-95
C1384	10	H	7-95
C1385	6	H	7-95
C1386	6	G	7-95
C1387	7	F	7-95
C1388	7	G	7-95
C2301	8	B	7-96
C2302	7	B	7-96
C2303	10	A	7-96
C2304	7	B	7-96
C2305	9	B	7-96
C2306	9	B	7-96
C2307	7	C	7-96
C2308	10	C	7-96
C2309	7	C	7-96
C2310	8	C	7-96
C2311	10	C	7-96
C2312	7	D	7-96
C2313	10	C	7-96
C2314	7	C	7-96
C2315	8	D	7-96
C2316	10	D	7-96
C2317	7	D	7-96
C2318	10	D	7-96
C2319	7	D	7-96
C2320	8	E	7-96
C2321	10	C	7-96
C2322	7	E	7-96
C2323	10	E	7-96
C2324	10	E	7-96
C2325	8	F	7-96
C2326	10	G	7-96
C2328	8	G	7-96
C2329	7	G	7-96
C2330	10	G	7-96
C2331	9	G	7-96
C2350	14	G	7-95
C2351	13	E	7-95
C2357	8	G	7-96
C3300	27	B	7-95
C3301	28	B	7-95
C3302	32	C	7-95
C3303	31	C	7-95
C3304	32	D	7-95
C3305	32	F	7-95
C3306	32	E	7-95
C3307	31	G	7-95
C3308	32	G	7-95
C3309	32	H	7-95
C3310	32	E	7-95
C3311	23	B	7-95
C3312	23	D	7-95
C3313	24	C	7-95
C3314	23	H	7-95
C3315	23	E	7-95
C3316	23	E	7-95
C3318	24	G	7-95
C3319	24	C	7-95
C3320	31	H	7-95
C3321	26	F	7-95
C3323	34	I	7-95
CR301	6	G	7-96
CR302	4	G	7-96
CR303	6	H	7-96
CR304	5	F	7-96
CR1350	8	H	7-95
CR3300	31	D	7-95
CR3301	32	D	7-95
CR3302	32	G	7-95
CR3303	33	G	7-95
CR3304	24	H	7-95
CR3305	24	G	7-95
CR3306	24	G	7-95
CR3307	31	F	7-95
CR3308	23	C	7-95
E2350	32	F	7-95
E2351	16	G	7-95
E2352	32	H	7-95
HR2350	33	F	7-95
HR2351	1	C	7-95
J302	11	C	7-95
J303	11	C	7-95
J304	11	B	7-95
J305	11	B	7-95
J306	11	B	7-95
J307	5	A	7-96
J308	5	G	7-96
J310	23	B	7-95
J350	1	A	7-96
J351	2	C	7-96
J1301	12	A	7-96
J2301	8	A	7-96
J2354	21	F	2-95
K3300	27	F	2-95
K3301	29	F	2-95
L301	6	B	7-96
L302	4	A	7-96
L303	4	C	7-96
L304	6	C	7-96
L305	6	D	7-96
L306	6	E	7-96
L307	6	H	7-96
L308	6	H	7-96
L350	3	B	7-96
L351	1	C	7-96
L352	2	C	7-96
L353	2	D	7-96
L354	1	E	7-96
L355	1	F	7-96
L356	3	F	7-96
L357	1	F	7-96
L358	2	G	7-96
L359	2	E	7-96
L360	3	G	7-96
L1301	12	B	7-96
L1302	11	B	7-96
L1303	12	B	7-96
L1304	13	B	7-96
L1306	13	C	7-96
L1307	12	D	7-96
L1308	13	C	7-96
L1309	12	E	7-96
L1310	13	D	7-96
L1311	13	G	7-96
L1312	13	G	7-96
L1350	7	A	7-95
L1351	7	B	7-95
L1352	3	D	7-95
L1353	7	C	7-95
L1354	7	D	7-95
L1355	6	E	7-95
L1356	6	E	7-95
L1357	7	E	7-95
L1358	7	F	7-95
L1359	9	E	7-95
L1360	9	G	7-95
L1361	9	G	7-95
L1362	7	H	7-95
L1363	9	H	7-98
L1364	9	H	7-95
L1365	9	H	7-95
L1367	9	H	7-95
L2301	9	C	7-96
L2302	9	C	7-96
L2303	9	C	7-96
L2304	9	C	7-96
L2305	9	D	7-96
L2306	9	D	7-96
L2307	9	E	7-96
L2308	9	D	7-96
L2309	9	G	7-96
L2310	9	G	7-96
L2311	7	A	7-96
M2350	17	E	7-95
P307	12	C	7-95
P308	12	E	7-95
P350	11	D	7-95
P351	11	E	7-95
P1301	20	H	7-95
P2301	17	H	7-95
P2350	35	G	7-95
P2351	34	G	7-95
P//11350	10	G	7-95
R301	4	A	7-96
R302	5	A	7-96
R303	4	B	7-96
R304	5	B	7-96
R305	5	B	7-96
R306	6	B	7-96
R307	5	C	7-96
R308	6	B	7-96
R309	4	C	7-96
R310	6	C	7-96
R311	4	C	7-96
R312	5	D	7-96
R313	5	D	7-96
R314	6	C	7-96
R315	6	D	7-96
R316	6	E	7-96
R317	5	E	7-96
R318	6	D	7-96
R319	6	E	7-96
R320	6	E	7-96
R321	5	E	7-96
R322	6	E	7-96
R323	4	G	7-96
R324	6	G	7-96
R325	6	G	7-96
R326	6	G	7-96
R327	4	G	7-96
R329	4	H	7-96
R330	6	H	7-96
R331	5	G	7-96
R332	4	A	7-96
R333	5	F	7-96
R336	4	F	7-96
R337	4	F	7-96
R338	6	F	7-96
R339	5	G	7-96
R340	6	E	7-96
R350	1	B	7-96
R351	2	B	7-96
R352	2	B	7-96
R353	1	C	7-96
R354	1	C	7-96
R355	3	B	7-96
R356	2	C	7-96
R357	3	E	7-96
R358	1	F	7-96
R359	2	G	7-96
R360	2	E	7-96
R1301	13	B	7-96
R1302	13	B	7-96
R1303	11	B	7-96
R1304	11	B	7-96
R1305	12	B	7-96
R1306	13	B	7-96
R1307	11	C	7-96
R1308	11	C	7-96
R1309	12	B	7-96
R1310	13	C	7-96
R1311	11	D	7-96
R1312	11	D	7-96
R1313	12	C	7-96
R1315	11	D	7-96
R1318	13	D	7-96
R1319	12	E	7-96
R1320	12	D	7-96
R1321	12	F	7-96
R1322	12	F	7-96
R1323	11	G	7-96
R1324	12	G	7-96
R1325	11	G	7-95
R1350	3	B	7-95
R1351	2	A	7-96
R1352	2	B	7-96
R1353	3	C	7-95
R1354	2	B	7-95
R1355	1	C	7-95
R1356	2	C	7-95
R1357	3	C	7-95
R1358	2	C	7-95
R1359	2	D	7-95
R1360	3	D	7-95
R1361	2	E	7-95
R1362	2	E	7-95
R1363	3	F	7-95
R1364	2	F	7-95
R1365	9	D	7-95
R1366	3	G	7-95
R1367	3	F	7-95
R1368	7	E	7-95
R1369	3	G	7-95
R1370	8	E	7-95
R1371	5	G	7-95
R1372	8	F	7-95
R1373	7	F	7-95
R1374	6	G	7-95
R1375	6	G	7-95
R1376	6	H	7-95
R1377	6	G	7-95
R1378	8	G	7-95
R1379	8	H	7-95
R1380	8	I	7-95
R1381	9	H	7-95
R1382	9	H	7-95
R1383	7	H	7-95
R1384	6	F	7-96
R1385	9	H	7-95
R2301	8	B	7-96
R2302	9	B	7-96
R2303	9	B	7-96
R2304	8	B	7-96
R2305	7	B	7-96
R2306	8	B	7-96
R2307	9	B	7-96
R2308	10	B	7-96
R2309	8	C	7-96
R2310	8	C	7-96
R2311	9	B	7-96
R2312	10	C	7-96
R2313	8	D	7-96
R2314	8	D	7-96
R2315	9	C	7-96
R2316	10	D	7-96
R2317	8	E	7-96
R2318	8	E	7-96
R2319	9	D	7-96
R2320	10	E	7-96
R2321	8	E	7-96
R2322	9	E	7-96
R2323	8	F	7-96
R2324	8	F	7-96
R2325	8	G	7-96
R2326	8	G	7-96
R2350	17	B	7-95
R2351	18	P	7-95
R2352	18		7-95
R2353	19		7-95
R2354	20		7-95
R2355	21	B	7-95
R2356	21	B	7-95
R2357	32	C	7-95
R2358	12	F	7-95
R2362	32	A	7-95
R2363	11	F	7-95
R2364	33	A	7-95
R3301	32	B	7-95
R3302	32	B	7-95
R3303	32	B	7-95
R3304	33	D	7-95
R3305	32	C	7-95
R3306	37	B	7-95
R3307	31	B	7-95
R3308	38	B	7-95
R3309	31	B	7-95
R3310	32	A	7-95
R3311	31	A	7-95
R3312	33	C	7-95
R3313	31	A	7-95
R3314	32	A	7-95
R3315	32	C	7-95
R3316	31	C	7-95
R3317	32	C	7-95
R3318	31	E	7-95
R3319	32	D	7-95
R3320	31	D	7-95
R3321	31	E	7-95
R3322	32	E	7-95
R3323	31	E	7-95
R3324	32	E	7-95
R3325	31	F	7-95
R3327	30	F	7-95
R3326	32	E	7-95
R3328	22	B	7-95
R3329	31	H	7-95
R3330	32	F	7-95
R3331	32	H	7-95
R3332	33	F	7-95
R3333	27	F	7-95
R3334	24	C	7-95
R3335	33	D	7-95
R3336	24	D	7-95
R3337	31	G	7-95
R3338	28	C	7-95
R3339	24	C	7-95
R3340	32	G	7-95
R3341	33	H	7-95
R3342	27	C	7-95
R3343	32	G	7-95
R3344	33	H	7-95
R3345	31	I	7-95
R3346	31	H	7-95
R3347	32	H	7-95
R3348	26	H	7-95
R3350	26	H	7-95
R3351	32	I	7-95
R3352	32	I	7-95
R3353	31	I	7-95
R3354	31	I	7-95
R3355	24	D	7-95
R3356	23	F	7-95
R3357	23	C	7-95
R3358	23	C	7-95
R3360	23	H	7-95
R3363	24	E	7-95
R3364	23	E	7-95
R3365	23	F	7-95
R3366	24	F	7-95
R3367	24	F	7-95
R3369	23	E	7-95
R3370	24	F	7-95
R3371	24	F	7-95
R3372	23	G	7-95
R3373	23	G	7-95
R3374	23	F	7-95
R3375	24	F	7-95
R3376	23	F	7-95
R3378	25	G	7-95
R3380	32	F	7-95
R3381	32	I	7-95
R3382	18	H	7-95
S2351	7	I	7-95
S2352	6	I	7-95
S2353	18	C	7-15
S2354	20	D	7-95
S2355	11	I	7-95
T301	5	G	7-95
T302	5	F	7-96
T2350	13	H	7-95
TP301	11	B	7-95
W2350	34	F	7-95
W2351	34	C	7-95
XV301	5	A	7-96
XV302	5	B	7-96
XV303	5	C	7-96
XV304	5	C	7-96
XV305	5	D	7-96
XV306	5	E	7-96
XV307	5	H	7-96
XV308	5	H	7-96
XV350	2	B	7-96
XV351	2	C	7-96
XV352	2	D	7-96
XV353	2	E	7-96
XV354	1	F	7-96
XV1301	12	B	7-96
XV1302	12	C	7-96
XV1303	12	C	7-96
XV1304	12	D	7-96
XV1305	12	E	7-96
XV1306	12	F	7-96
XV1350	6	A	7-95
XV1351	6	B	7-95
XV1352	6	C	7-95
XV1353	6	D	7-95
XV1354	6	E	7-95
XV1355	8	E	7-95
XV1356	8	G	7-95
XV1357	8	G	7-95
XV2301	8	B	7-96
XV2302	8	C	7-96
XV2303	8	D	7-96
XV2304	8	D	7-96
XV2305	8	E	7-96
XV2306	8	G	7-96
XV3300	26	A	7-95
XV3301	29	A	7-95
XV3302	27	B	7-95
XV3303	29	B	7-95
XV3304	28	C	7-95
XV3305	28	D	7-95
XV3306	28	D	7-95
XV3307	28	E	7-95
XV3308	28	H	7-95
XV3309	25	H	7-95
XV3310	27	D	7-95
XV3311	26	E	7-95
XV3312	26	D	7-95
Z2350	11	H	7-95
Z2351	15	D	7-95
Z3301	23	A	7-95

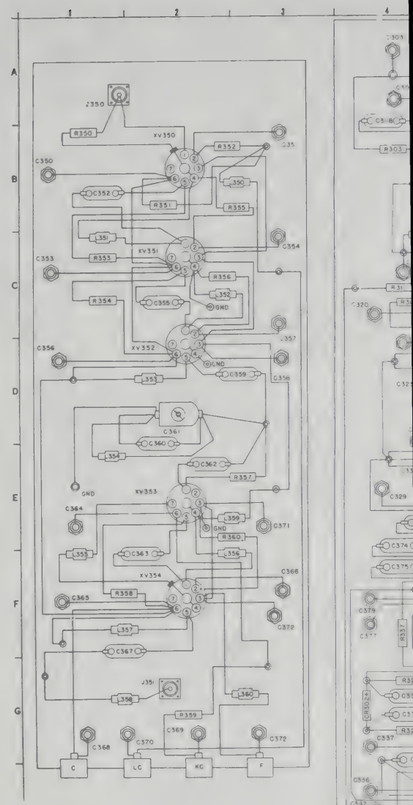

FIG. NO.	SYMBOL	VERT	HORIZ	FIG. NO.
7-96	R3347	32	H	7-95
7-96	R3348	26	H	7-95
7-96	R3350	26	H	7-95
7-96	R3351	32	I	7-95
7-96	R3352	32	I	7-95
7-96	R3353	31	I	7-95
7-96	R3354	31	I	7-95
7-96	R3355	24	D	7-95
7-96	R3356	23	F	7-95
7-96	R3357	23	C	7-95
7-96	R3358	23	C	7-95
7-96	R3360	23	H	7-95
7-95	R3363	24	E	7-95
7-95	R3364	23	E	7-95
7-95	R3365	23	F	7-95
7-95	R3366	24	F	7-95
7-95	R3367	24	F	7-95
7-95	R3369	23	E	7-95
7-95	R3370	24	F	7-95
7-95	R3371	24	F	7-95
7-95	R3372	23	G	7-95
7-95	R3373	23	G	7-95
7-95	R3374	23	F	7-95
7-95	R3375	24	F	7-95
7-95	R3376	23	F	7-95
7-95	R3378	25	G	7-95
7-95	R3380	32	F	7-95
7-95	R3381	32	I	7-95
7-95	R3382	18	H	7-95
7-95	S2351	7	I	7-95
7-95	S2352	6	I	7-95
7-95	S2353	18	C	7-15
7-95	S2354	20	D	7-95
7-95	S2355	11	I	7-95
7-95	T301	5	G	7-95
7-95	T302	5	F	7-96
7-95	T2350	13	H	7-95
7-95	TP301	11	B	7-95
7-95	W2350	34	F	7-95
7-95	W2351	34	C	7-95
7-95	XV301	5	A	7-96
7-95	XV302	5	B	7-96
7-95	XV303	5	C	7-96
7-95	XV304	5	C	7-96
7-95	XV305	5	D	7-96
7-95	XV306	5	E	7-96
7-95	XV307	5	H	7-96
7-95	XV308	5	H	7-96
7-95	XV350	2	B	7-96
7-95	XV351	2	C	7-96
7-95	XV352	2	D	7-96
7-95	XV353	2	E	7-96
7-95	XV354	1	F	7-96
7-95	XV1301	12	B	7-96
7-95	XV1302	12	C	7-96
7-95	XV1303	12	C	7-96
7-95	XV1304	12	D	7-96
7-95	XV1305	12	E	7-96
7-95	XV1306	12	F	7-96
7-95	XV1350	6	A	7-95
7-95	XV1351	6	B	7-95
7-95	XV1352	6	C	7-95
7-95	XV1353	6	D	7-95
7-95	XV1354	6	E	7-95
7-95	XV1355	8	E	7-95
7-95	XV1356	8	G	7-95
7-95	XV1357	8	G	7-95
7-95	XV2301	8	B	7-96
7-95	XV2302	8	C	7-96
7-95	XV2303	8	D	7-96
7-95	XV2304	8	D	7-96
7-95	XV2305	8	E	7-96
7-95	XV2306	8	G	7-96
7-95	XV3300	26	A	7-95
7-95	XV3301	29	A	7-95
7-95	XV3302	27	B	7-95
7-95	XV3303	29	B	7-95
7-95	XV3304	28	C	7-95
7-95	XV3305	28	C	7-95
7-95	XV3306	28	D	7-95
7-95	XV3307	28	E	7-95
7-95	XV3308	28	H	7-95
7-95	XV3309	25	H	7-95
7-95	XV3310	27	D	7-95
7-95	XV3311	26	E	7-95
7-95	XV3312	26	D	7-95
7-95	Z2350	11	H	7-95
7-95	Z2351	15	D	7-95
7-95	Z3301	23	A	7-95

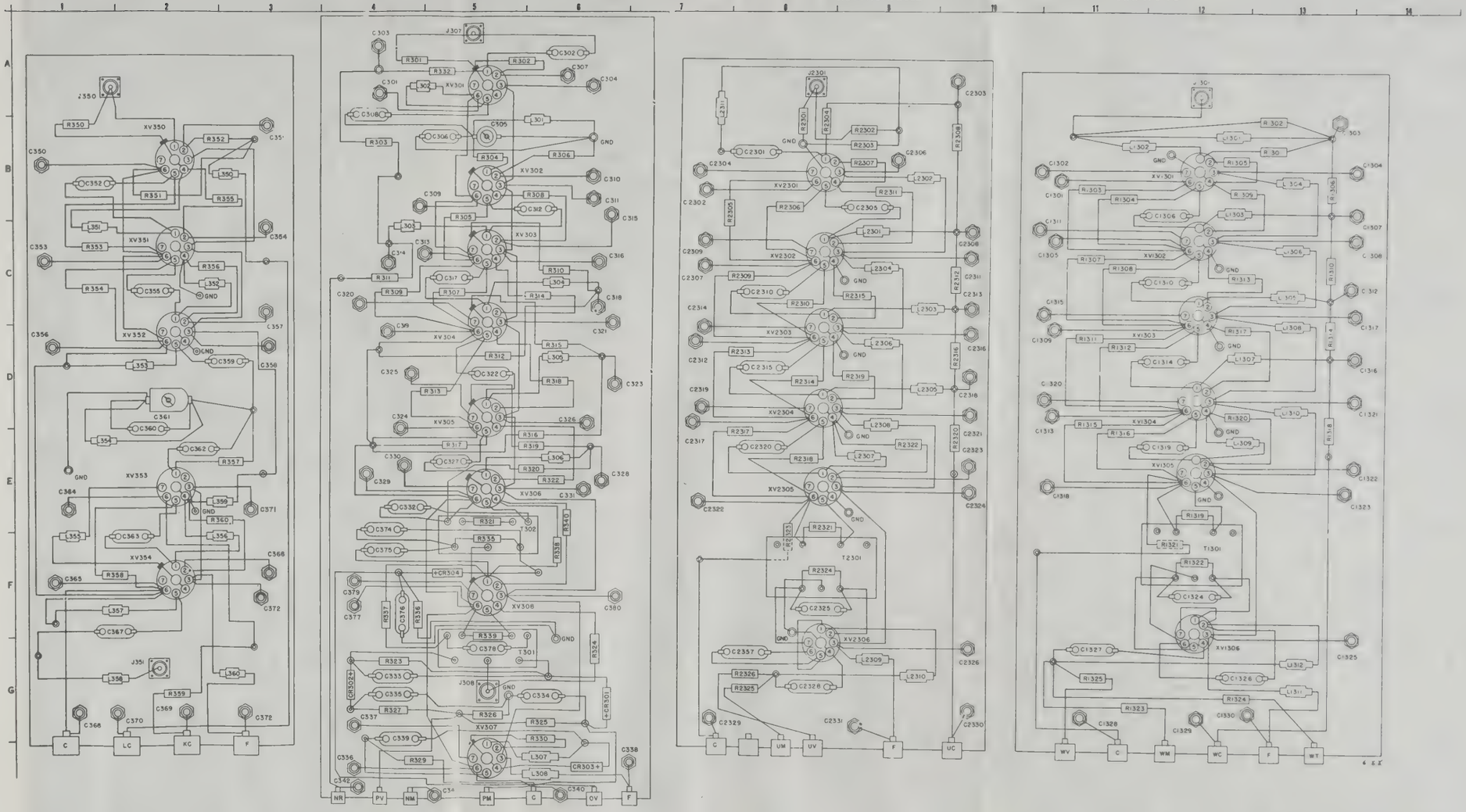

Figure 7–96. Signal Comparator Practical Wiring Diagram (Subchassis)

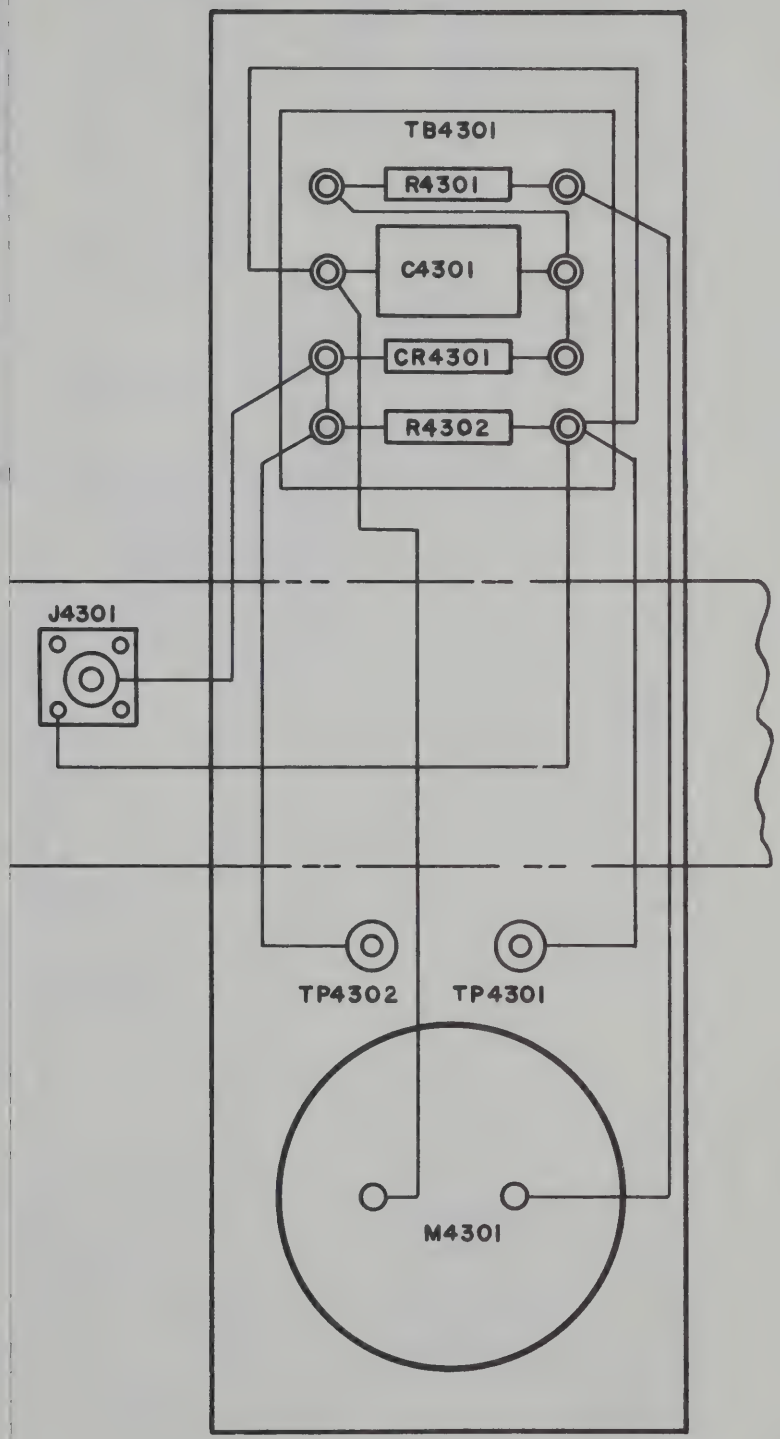

Figure 7–97. Signal Comparator Test Set Practical Wiring Diagram

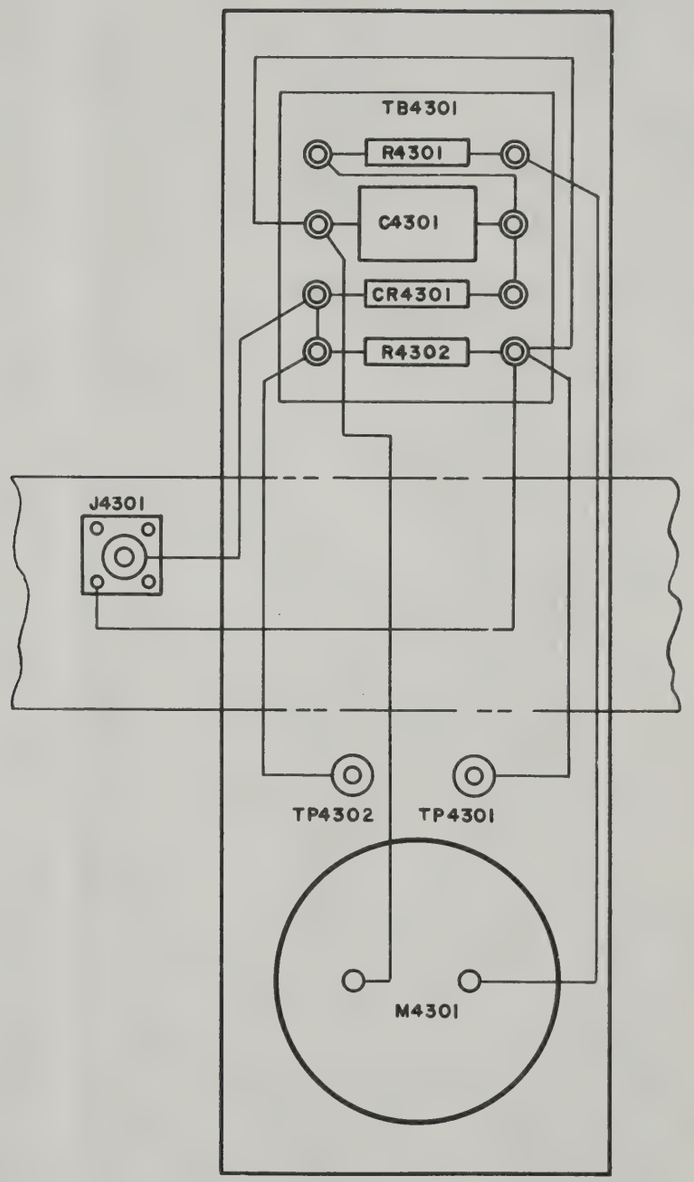

Figure 7–97. Signal Comparator Test Set Practical Wiring Diagram

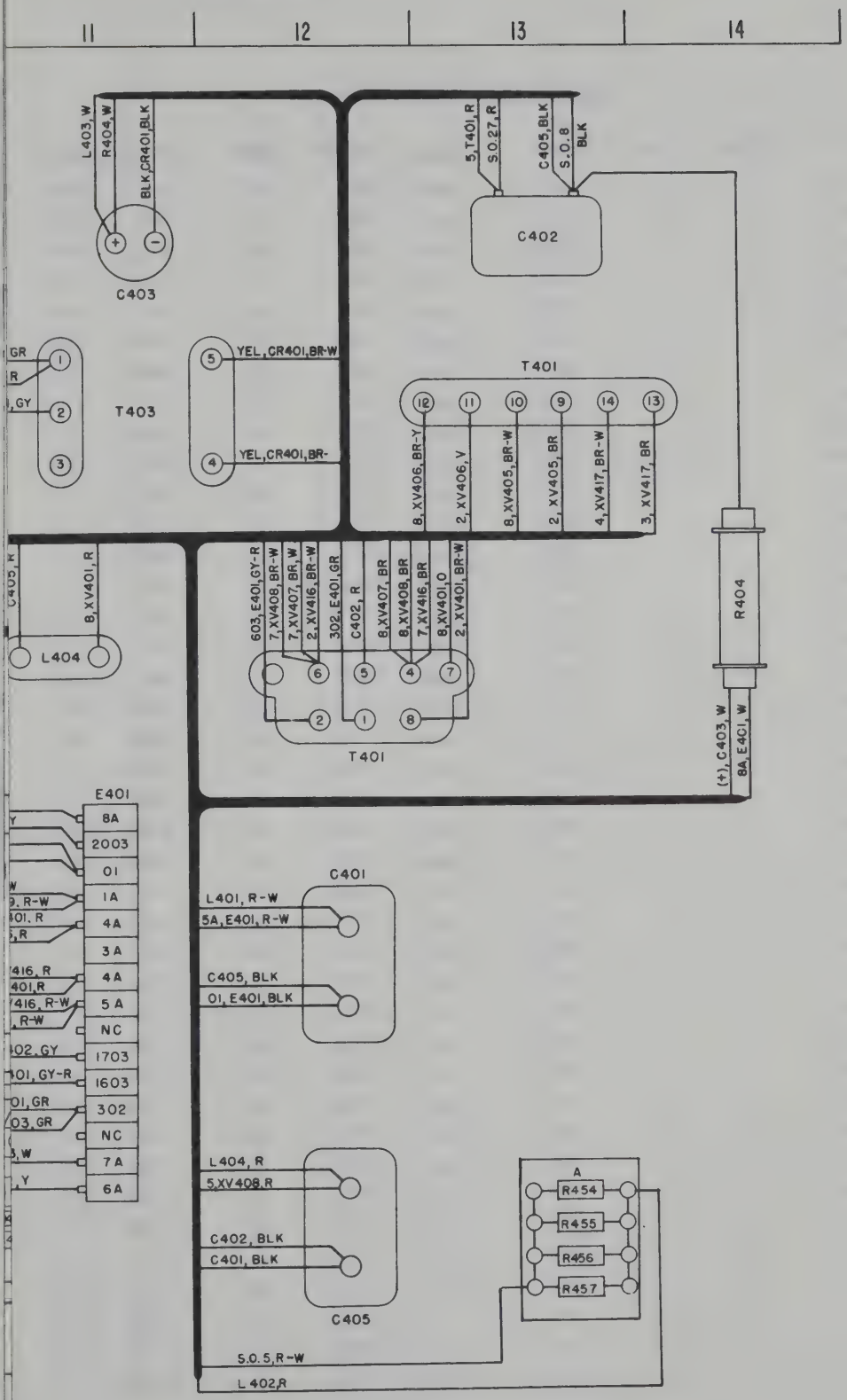

Figure 7—98. Power Supply Practical Wiring Diagram (Bottom View)

COMPONENT LOCATIONS

SYMBOL	VERT	HORIZ	FIG. NO.
B401	9	H	7-99
C401	12	E	7-98
C402	13	A	7-98
C403	11	A	7-98
C404	8	G	7-98
C405	12	F	7-98
C406	8	G	7-98
C407	14	E	7-99
C408	8	G	7-99
C409	1	E	7-98
C410	1	F	7-98
CR401	9	B	7-98
CR402	9	D	7-99
E401	11	D	7-98
E401	5	D	7-99
E403	6	D	7-99
E404	7	B	7-99
E405	8	I	7-99
E406	21	H	7-100
F401	18	C	7-100
F402	17	C	7-100
F403	16	C	7-100
F404	14	C	7-100
F405	13	C	7-100
F406	11	C	7-100
F407	9	C	7-100
F408	8	C	7-100
F409	6	C	7-100
F410	5	C	7-100
F411	3	C	7-100
F412	18	D	7-100
F413	14	D	7-100
F414	10	D	7-100
F415	8	D	7-100
F416	14	B	7-100
F417	2	D	7-98
FL401	6	G	7-100
HR401	5	F	7-100
J401	17	I	7-100
J402	11	F	7-100
J403	5	I	7-100
J404	18	F	7-100
J405	8	F	7-100
J406	15	I	7-100
J407	11	I	7-100
J408	1	I	7-100
J409	20	D	7-100
J410	3	D	7-100
J411	14	F	7-100
J412	6	F	7-100
J413	19	G	7-100
J414	3	G	7-100
J415	20	F	7-100
J416	19	F	7-100
J417	3	G	7-100
J418	4	F	7-100
J419	20	I	7-100
J420	21	F	7-100
J422	5	F	7-100
K401	7	E	7-99
K402	12	E	7-99
K403	14	F	7-99
K405	9	E	7-99
L401	5	A	7-98
L402	3	A	7-98
L403	9	A	7-98
L404	11	C	7-98
M401	16	A	7-100
M402	11	A	7-100
M403	5	A	7-100
R401	5	G	7-98
R402	1	C	7-98
R403	7	G	7-98
R404	14	C	7-98
R405	3	G	7-98
R406	4	F	7-98
R407	3	G	7-98
R408	3	G	7-98
R409	4	G	7-98
R410	4	G	7-98
R414	3	F	7-98
R415	4	F	7-98
R416	8	F	7-98
R417	8	F	7-98
R418	8	F	7-98
R419	7	E	7-98
R420	4	F	7-98
R421	4	F	7-98
R422	2	F	7-98
R423	4	E	7-98
R424	5	F	7-98
R426	2	E	7-98
R427	4	E	7-98
R429	9	F	7-98
R432	9	D	7-98
R433	8	D	7-98
R434	8	D	7-98
R435	8	D	7-98
R438	3	E	7-98
R443	11	F	7-99
R444	20	D	7-100
R445	1	C	7-100
R446	1	F	7-100
R447	2	F	7-100
R448	1	F	7-100
R449	2	F	7-100
R450	5	G	7-100
R451	1	D	7-98
R452	5	G	7-98
R453	7	F	7-98
R454	13	F	7-98
R455	13	F	7-98
R456	13	F	7-98
R457	13	F	7-98
R458	7	C	7-98
R459	4	E	7-98
R460	2	F	7-98
R461	3	E	7-98
R462	10	F	7-98
S401	3	E	7-100
S402	10	H	7-99
S403	1	B	7-100
S404	20	A	7-100
T401	13	B	7-98
T402	4	C	7-98
T403	11	B	7-98
XF417	5	D	7-98
X1401	18	B	7-100
X1402	17	B	7-100
X1403	16	B	7-100
X1404	14	B	7-100
X1405	13	B	7-100
X1406	11	B	7-100
X1407	9	B	7-100
X1408	8	B	7-100
X1409	6	B	7-100
X1410	5	B	7-100
X1411	3	B	7-100
X1412	16	D	7-100
X1413	12	D	7-100
X1414	9	D	7-100
X1415	6	D	7-100
X1416	14	A	7-100
X1417	1	D	7-100
XV401	6	A	7-98
XV402	6	B	7-98
XV403	6	C	7-98
XV404	8	C	7-98
XV405	8	B	7-98
XV406	8	A	7-98
XV407	3	F	7-98
XV408	2	G	7-98
XV409	4	G	7-98
XV410	7	F	7-98
XV411	7	E	7-98
XV412	9	E	7-98
XV413	8	E	7-98
XV414	4	F	7-98
XV415	2	F	7-98
XV416	3	E	7-98
XV417	7	D	7-98

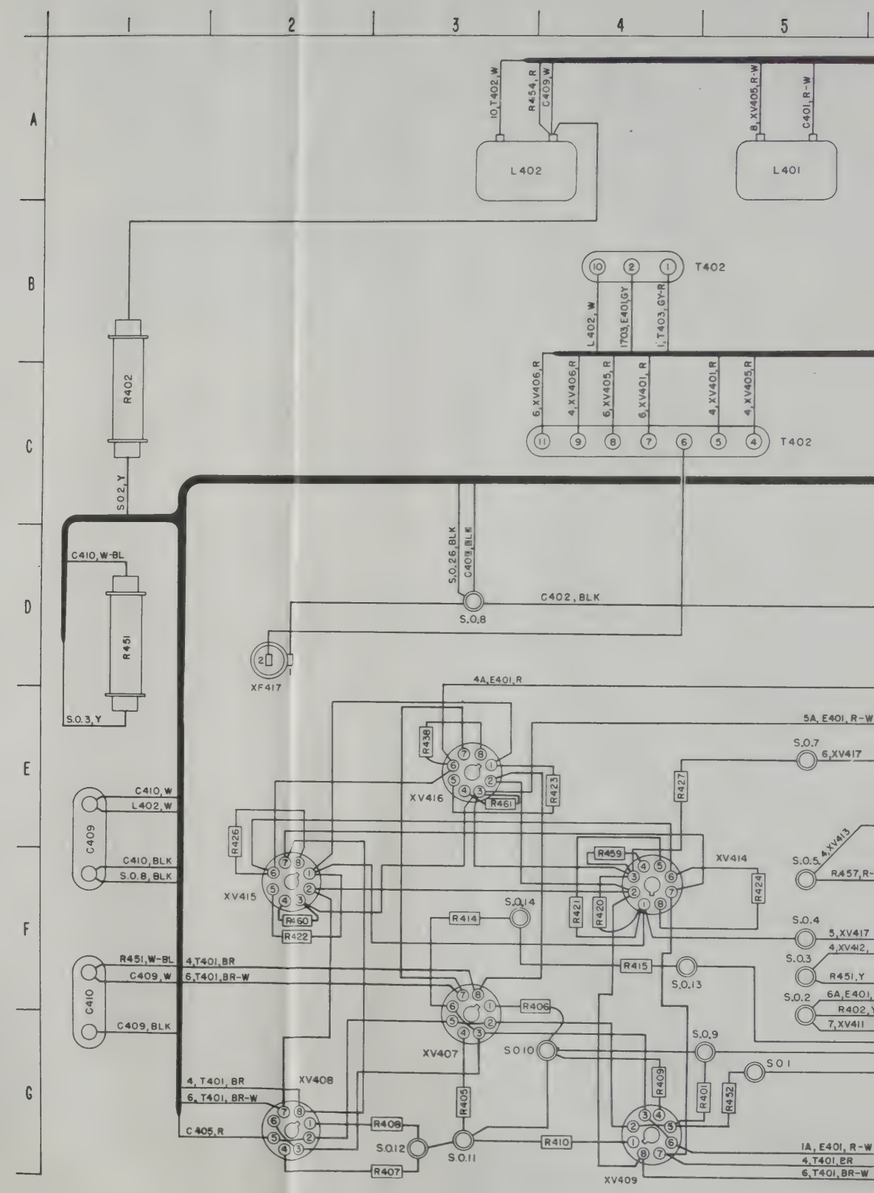

HORIZ	FIG. NO.
H	7-99
B	7-100
A	7-100
B	7-98
C	7-98
B	7-98
D	7-98
B	7-100
B	7-100
B	7-100
B	7-100
B	7-100
B	7-100
B	7-100
B	7-100
B	7-100
B	7-100
B	7-100
D	7-100
D	7-100
D	7-100
D	7-100
A	7-100
D	7-100
A	7-98
B	7-98
C	7-98
C	7-98
B	7-98
A	7-98
F	7-98
G	7-98
G	7-98
F	7-98
E	7-98
E	7-98
E	7-98
F	7-98
F	7-98
E	7-98
D	7-98

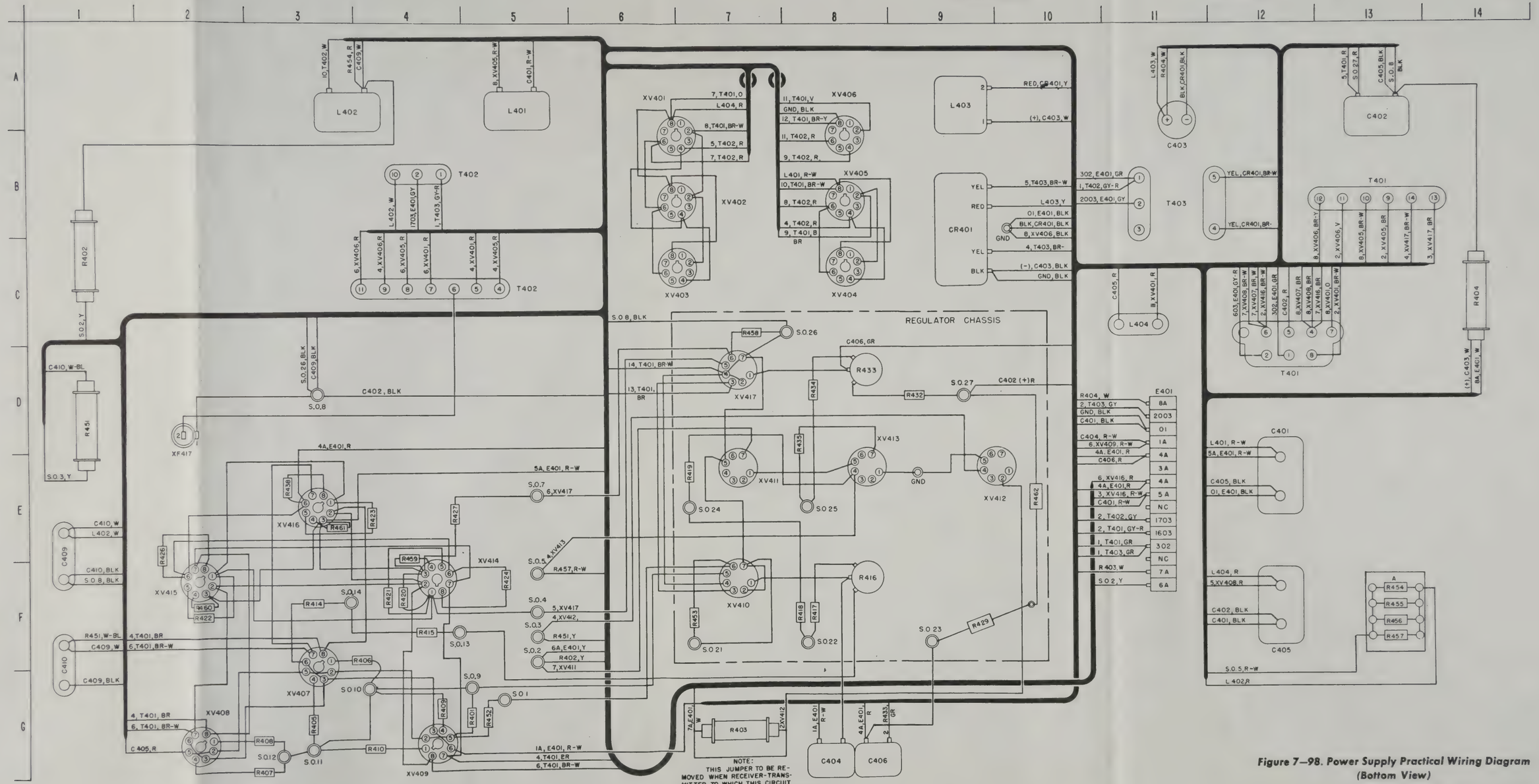

Figure 7—98. Power Supply Practical Wiring Diagram (Bottom View)

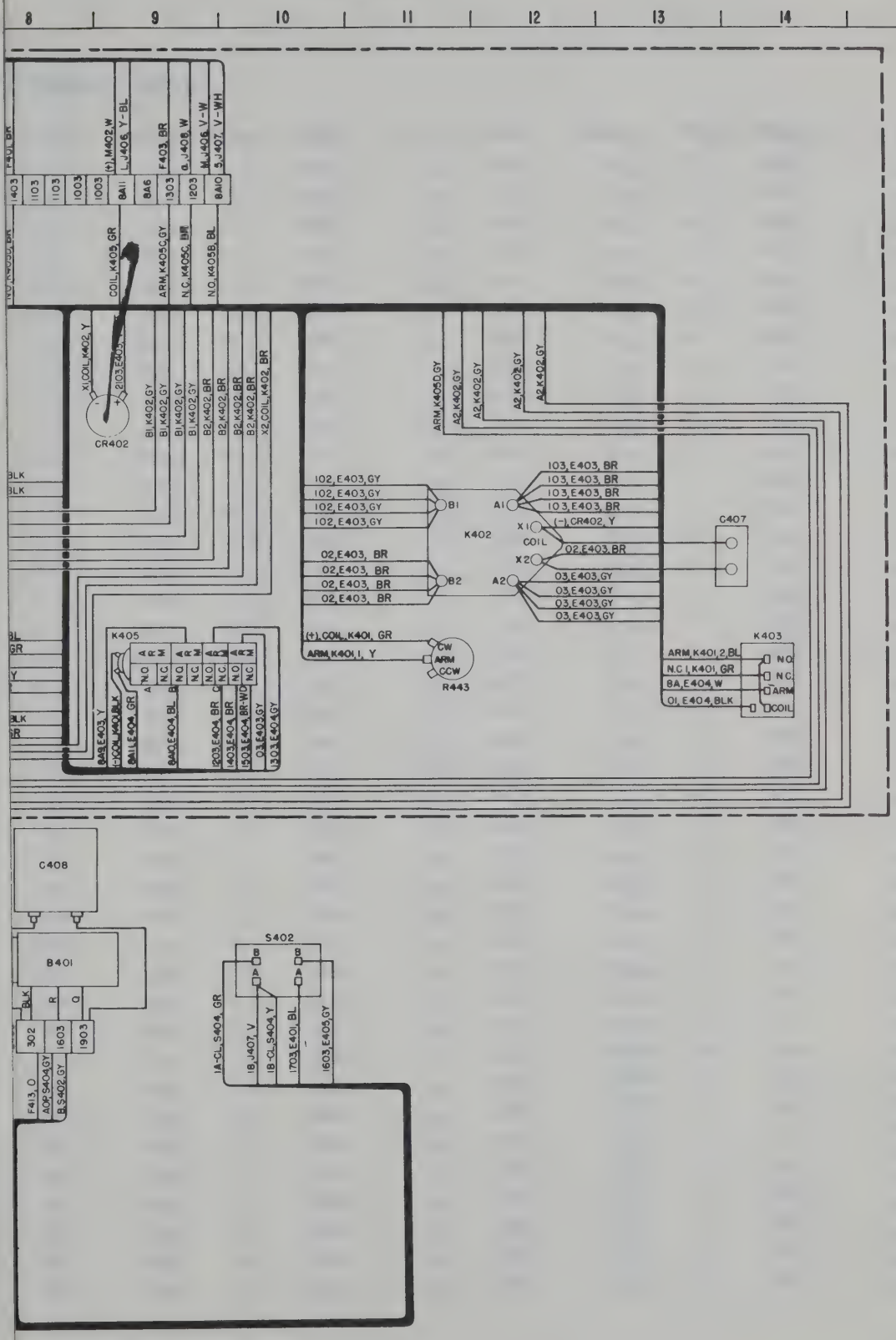

Figure 7—99. Power Supply Practical Wiring Diagram (Control Subchassis)

COMPONENT LOCATIONS

SYMBOL	VERT	HORIZ	FIG. NO.
B401	9	H	7-99
C401	12	E	7-98
C402	13	A	7-98
C403	11	A	7-98
C404	8	G	7-98
C405	12	F	7-98
C406	8	G	7-98
C407	14	E	7-99
C408	8	G	7-99
C409	1	E	7-98
C410	1	F	7-98
CR401	9	B	7-98
CR402	9	D	7-99
E401	11	D	7-98
E401	5	D	7-99
E403	6	D	7-99
E404	7	B	7-99
E405	8	I	7-99
E406	21	H	7-100
F401	18	C	7-100
F402	17	C	7-100
F403	16	C	7-100
F404	14	C	7-100
F405	13	C	7-100
F406	11	C	7-100
F407	9	C	7-100
F408	8	C	7-100
F409	6	C	7-100
F410	5	C	7-100
F411	3	C	7-100
F412	18	D	7-100
F413	14	D	7-100
F414	10	D	7-100
F415	8	D	7-100
F416	14	B	7-100
F417	2	D	7-98
FL401	6	G	7-100
HR401	5	F	7-100
J401	17	I	7-100
J402	11	F	7-100
J403	5	I	7-100
J404	18	F	7-100
J405	8	F	7-100
J406	15	I	7-100
J407	11	I	7-100
J408	1	I	7-100
J409	20	D	7-100
J410	3	D	7-100
J411	14	F	7-100
J412	6	F	7-100
J413	19	G	7-100
J414	3	G	7-100
J415	20	F	7-100
J416	19	F	7-100
J417	3	G	7-100
J418	4	F	7-100
J419	20	I	7-100
J420	21	F	7-100
J422	5	F	7-100
K401	7	E	7-99
K402	12	E	7-99
K403	14	F	7-99
K405	9	E	7-99
L401	5	A	7-98
L402	3	A	7-98
L403	9	A	7-98
L404	11	C	7-98
M401	16	A	7-100
M402	11	A	7-100
M403	5	A	7-100
R401	5	G	7-98
R402	1	C	7-98
R403	7	G	7-98
R404	14	C	7-98
R405	3	G	7-98
R406	4	F	7-98
R407	3	G	7-98
R408	3	G	7-98
R409	4	G	7-98
R410	4	G	7-98
R414	3	F	7-98
R415	4	F	7-98
R416	8	F	7-98
R417	8	F	7-98
R418	8	F	7-98
R419	7	E	7-98
R420	4	F	7-98
R421	4	F	7-98
R422	2	F	7-98
R423	4	E	7-98
R424	5	F	7-98
R426	2	E	7-98
R427	4	E	7-98
R429	9	F	7-98
R432	9	D	7-98
R433	8	D	7-98
R434	8	D	7-98
R435	8	D	7-98
R438	3	E	7-98
R443	11	F	7-99
R444	20	D	7-100
R445	1	C	7-100
R446	1	F	7-100
R447	2	F	7-100
R448	1	F	7-100
R449	2	F	7-100
R450	5	G	7-100
R451	1	D	7-98
R452	5	G	7-98
R453	7	F	7-98
R454	13	F	7-98
R455	13	F	7-98
R456	13	F	7-98
R457	13	F	7-98
R458	7	C	7-98
R459	4	E	7-98
R460	2	F	7-98
R461	3	E	7-98
R462	10	F	7-98
S401	3	E	7-100
S402	10	H	7-99
S403	1	B	7-100
S404	20	A	7-100
T401	13	B	7-98
T402	4	C	7-98
T403	11	B	7-98
XF417	5	D	7-98
X1401	18	B	7-100
X1402	17	B	7-100
X1403	16	B	7-100
X1404	14	B	7-100
X1405	13	B	7-100
X1406	11	B	7-100
X1407	9	B	7-100
X1408	8	B	7-100
X1409	6	B	7-100
X1410	5	B	7-100
X1411	3	B	7-100
X1412	16	D	7-100
X1413	12	D	7-100
X1414	9	D	7-100
X1415	6	D	7-100
X1416	14	A	7-100
X1417	1	D	7-100
XV401	6	A	7-98
XV402	6	B	7-98
XV403	6	C	7-98
XV404	8	C	7-98
XV405	8	B	7-98
XV406	8	A	7-98
XV407	3	F	7-98
XV408	2	G	7-98
XV409	4	G	7-98
XV410	7	F	7-98
XV411	7	E	7-98
XV412	9	E	7-98
XV413	8	E	7-98
XV414	4	F	7-98
XV415	2	F	7-98
XV416	3	E	7-98
XV417	7	D	7-98

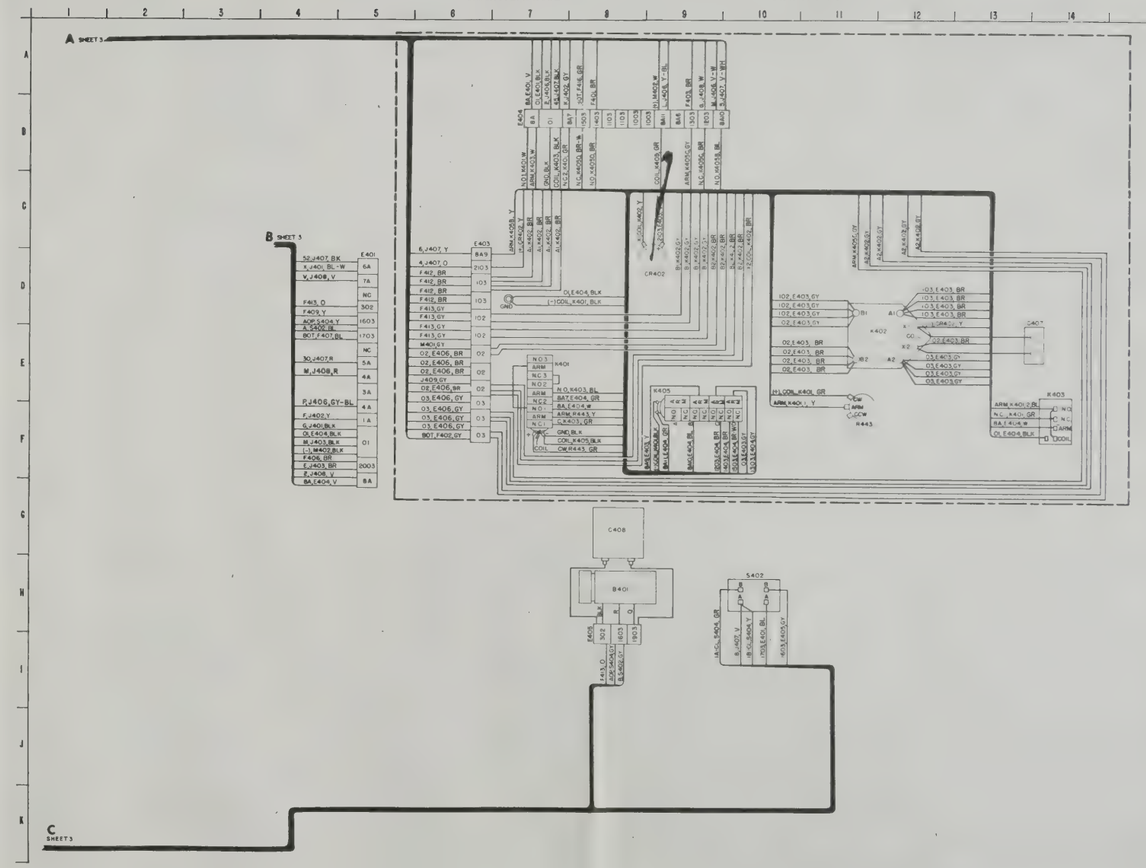

Figure 7–99. Power Supply Practical Wiring Diagram (Control Subchassis)

COMPONENT LOCATIONS

SYMBOL	VERT	HORIZ	FIG. NO.
B401	9	H	7-99
C401	12	E	7-98
C402	13	A	7-98
C403	11	A	7-98
C404	8	G	7-98
C405	12	F	7-98
C406	8	G	7-98
C407	14	E	7-99
C408	8	G	7-99
C409	1	E	7-98
C410	1	F	7-98
CR401	9	B	7-98
CR402	9	D	7-99
E401	11	D	7-98
E401	5	D	7-99
E402	6	D	7-99
E404	7	B	7-99
E405	8	I	7-99
E406	21	H	7-100
F401	18	C	7-100
F402	17	C	7-100
F403	16	C	7-100
F404	14	C	7-100
F405	13	C	7-100
F406	11	C	7-100
F407	9	C	7-100
F408	8	C	7-100
F409	6	C	7-100
F410	5	C	7-100
F411	3	C	7-100
F412	18	D	7-100
F413	14	D	7-100
F414	10	D	7-100
F415	8	D	7-100
F416	14	B	7-100
F417	2	D	7-98
FL401	6	G	7-100
HR401	5	F	7-100
J401	17	I	7-100
J402	11	F	7-100
J403	5	I	7-100
J404	18	F	7-100
J405	8	F	7-100
J406	15	I	7-100
J407	11	I	7-100
J408	1	I	7-100
J409	20	D	7-100
J410	3	D	7-100
J411	14	F	7-100
J412	6	F	7-100
J413	19	G	7-100
J414	3	G	7-100
J415	20	F	7-100
J416	19	F	7-100
J417	3	G	7-100
J418	4	F	7-100
J419	20	I	7-100
J420	21	F	7-100
J422	5	F	7-100
K401	7	E	7-99
K402	12	E	7-99
K403	14	F	7-99
K405	9	E	7-99
L401	5	A	7-98
L402	3	A	7-98
L403	9	A	7-98
L404	11	C	7-98
M401	16	A	7-100
M402	11	A	7-100
M403	5	A	7-100
R401	5	G	7-98
R402	1	C	7-98
R403	7	G	7-98
R404	14	C	7-98
R405	3	G	7-98
R406	4	F	7-98
R407	3	G	7-98
R408	3	G	7-98
R409	4	G	7-98
R410	4	G	7-98
R414	3	F	7-98
R415	4	F	7-98
R416	8	F	7-98
R417	8	F	7-98
R418	8	F	7-98
R419	7	E	7-98
R420	4	F	7-98
R421	4	F	7-98
R422	2	F	7-98
R423	4	E	7-98
R424	5	F	7-98
R426	2	E	7-98
R427	4	E	7-98
R429	9	F	7-98
R432	9	D	7-98
R433	8	D	7-98
R434	8	D	7-98
R435	8	D	7-98
R438	3	E	7-98
R443	11	F	7-99
R444	20	D	7-100
R445	1	C	7-100
R446	1	F	7-100
R447	2	F	7-100
R448	1	F	7-100
R449	2	F	7-98
R450	5	G	7-100
R451	1	D	7-98
R452	5	G	7-98
R453	7	F	7-98
R454	13	F	7-98
R455	13	F	7-98
R456	13	F	7-98
R457	13	F	7-98
R458	7	C	7-98
R459	4	E	7-98
R460	2	F	7-98
R461	3	E	7-98
R462	10	F	7-98
S401	3	E	7-100
S402	10	H	7-99
S403	1	B	7-100
S404	20	A	7-100
T401	13	B	7-98
T402	4	C	7-98
T403	11	B	7-98
XF417	5	D	7-98
X1401	18	B	7-100
X1402	17	B	7-100
X1403	16	B	7-100
X1404	14	B	7-100
X1405	13	B	7-100
X1406	11	B	7-100
X1407	9	B	7-100
X1408	8	B	7-100
X1409	6	B	7-100
X1410	5	B	7-100
X1411	3	B	7-100
X1412	16	D	7-100
X1413	12	D	7-100
X1414	9	D	7-100
X1415	6	D	7-100
X1416	14	A	7-100
X1417	1	D	7-100
XV401	6	A	7-98
XV402	6	B	7-98
XV403	6	C	7-98
XV404	8	C	7-98
XV405	8	B	7-98
XV406	8	A	7-98
XV407	3	F	7-98
XV408	2	G	7-98
XV409	4	G	7-98
XV410	7	F	7-98
XV411	7	E	7-98
XV412	9	E	7-98
XV413	8	E	7-98
XV414	4	F	7-98
XV415	2	F	7-98
XV416	3	E	7-98
XV417	7	D	7-98

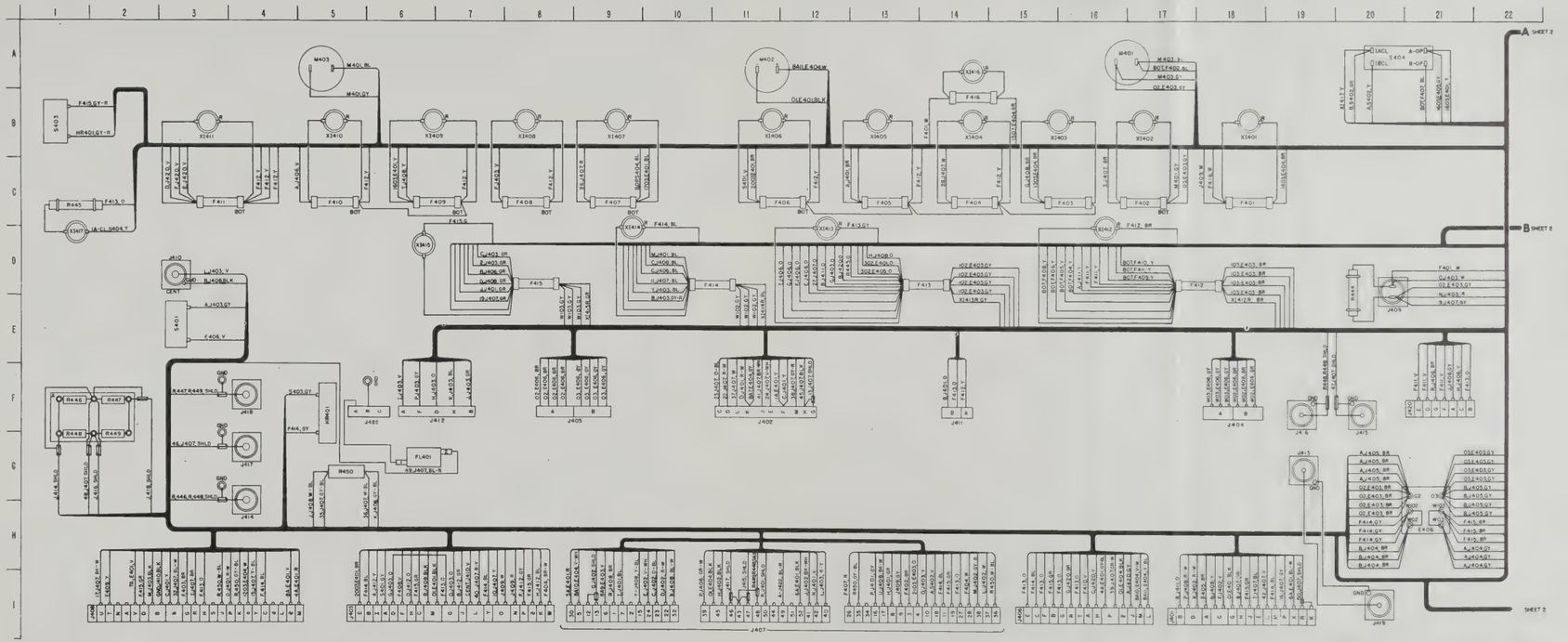

Figure 7–100. Power Supply Practical Wiring Diagram (Front Panel)

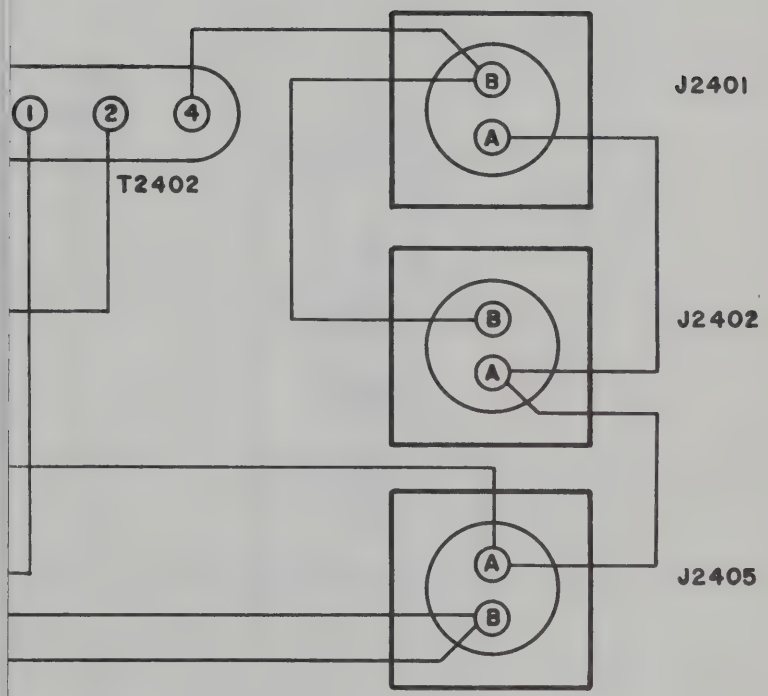

Figure 7—101. Variable Power Transformer Practical Wiring Diagram

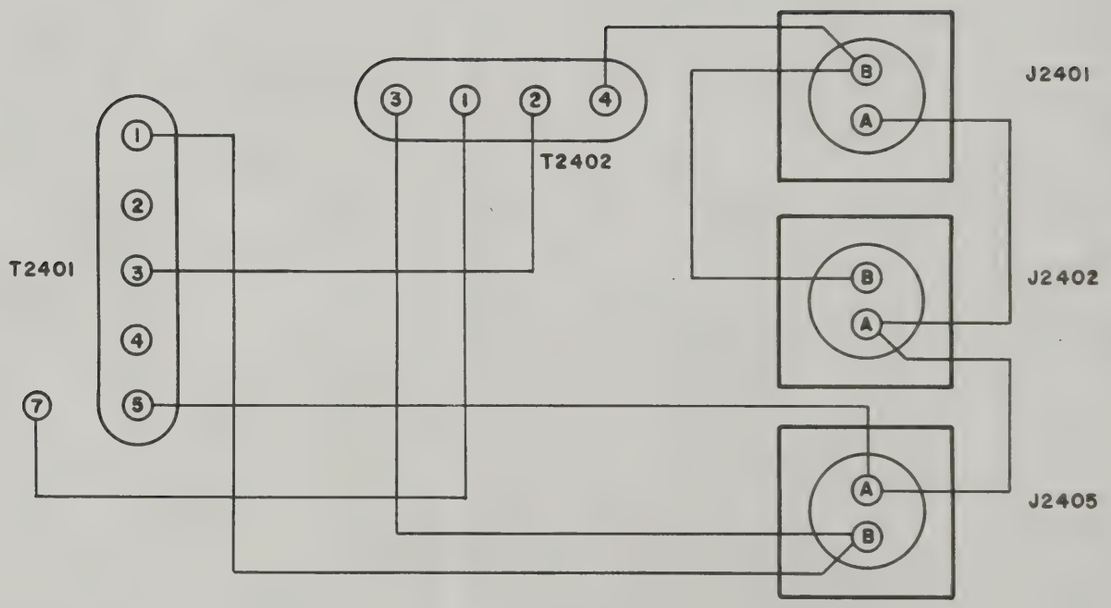

Figure 7—101. Variable Power Transformer Practical Wiring Diagram

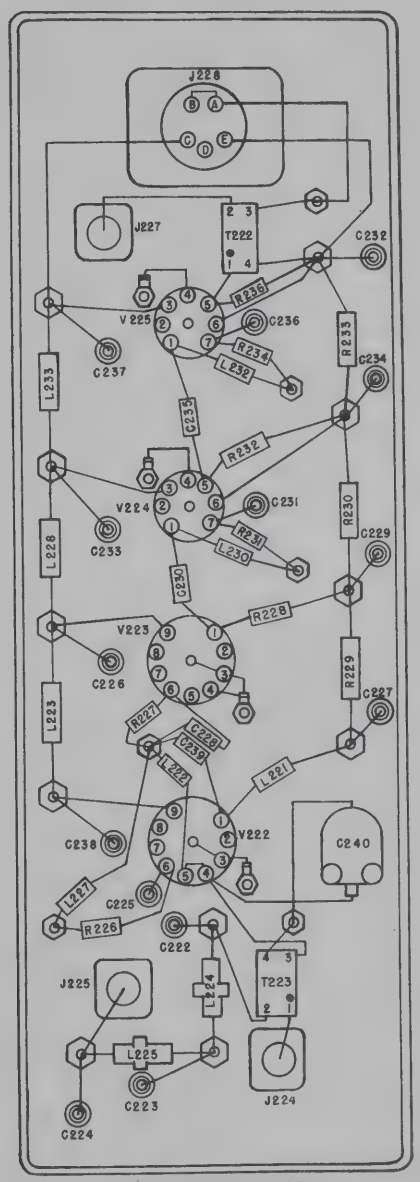

IF PREAMPLIFIER Z221

Figure 7—102. Receiver-Transmitter Practical Wiring Diagram (Main Chassis)

COMPONENT LOCATIONS

SYMBOL	VERT	HORIZ
B501	3	B
B502	23	B
C222	26	F
C223	26	F
C224	25	G
C225	26	E
C226	26	D
C227	27	D
C228	26	E
C229	27	D
C230	26	D
C231	26	D
C232	27	B
C233	26	D
C234	27	C
C235	26	C
C236	26	C
C237	26	C
C238	26	E
C239	26	E
C240	27	E
C501	6	E
C502	6	E
C503	15	E
C504	18	D
C505	9	B
C506	9	B
C507	9	A
C508	7	B
C509	11	B
C510	1	B
C511	2	E
C513	13	A
C514	10	E
C515	10	E
C516	11	F
C517	11	F
C518	5	D
C522	15	G
C523	12	F
C524	2	E
C540	2	D
C541	2	D
C542	1	B
CR501	9	C
CR503	19	D
E501	19	G
E502	16	F
E505	18	E
E506	20	C
E553	12	G
E558	20	D
HR501	11	G
HR502	12	F
J501	19	A
J502	20	A
J503	21	A
J505	12	A
J506	11	G
J507	17	A
J508	15	A
J513	19	D
J224	26	F
J225	26	F
J227	26	B
J228	26	A
K501	12	F
L221	26	E
L222	26	E
L223	25	E
L224	26	F
L225	26	F
L227	25	E
L228	25	D
L230	26	D
L232	26	C
L233	25	C
L501	13	D
L502	7	A
L504	12	G
M501	2	D
M502	1	B
P513	20	D
P516	18	D
P228	13	E
P/J504	20	B
P/J510	21	C
P/J511	21	C
P/J512	19	D
P/J514	20	E
P/J515	20	C
P/J517	23	C
P/J518	23	B
P/J519	22	D
P/J521	21	D
P/J224	17	C
P/J225	13	F
P/J227	17	B
R226	26	F
R227	26	E
R228	26	D
R229	27	D
R230	27	D
R231	26	D
R232	26	C
R233	27	C
R234	26	C
R236	26	B
R501	8	E
R502	8	E
R503	8	E
R504	8	E
R505	9	E
R506	5	G
R507	16	D
R508	11	B
R509	11	A
R510	3	E
R514	2	E
R515	6	A
R516	5	B
R517	5	B
R520	4	E
R521	16	G
R522	4	E
R523	5	E
S501	5	F
S504	6	F
S505	13	H
S506	3	G
T222	26	B
T223	26	F
T501	7	G
T502	11	D
T503	13	G
T504	4	C
TP501	15	D
TP502	15	D
TY501	16	C
U501	23	C
U502	21	D
V222	26	E
V223	26	D
V224	26	D
V225	26	C
V502	19	E
V503A	20	D
V504A	20	C
W501	22	C
W502	19	D
W503	20	E
W504	20	C
X1501	4	G
X1502	4	E
XV501	9	F
Z221	26	G
Z501	8	C
Z502	7	C
Z503	2	C
Z505	13	B
Z506	13	C
Z507	3	C
Z508	3	C
Z509	19	D

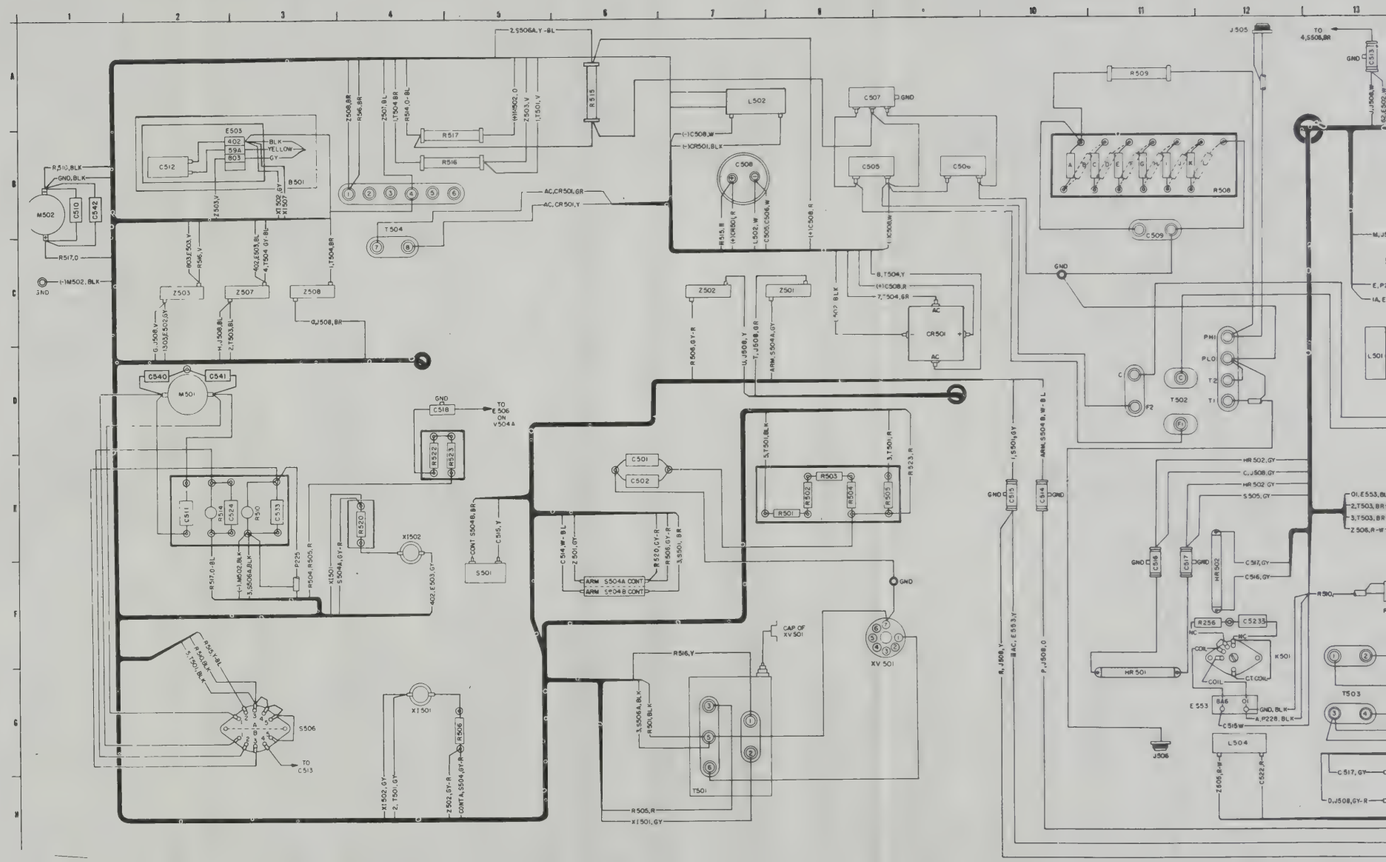
1
2
3
4
5
6
7
8
9
10
11
12
13
A
B
C
D
E
F
G
H
J505
TO 4,S506,BR
L502
C508
C507
C505
C504
R509
R508
C509
GND
T504
AC,CR501,GR
AC,CR501,Y
Z503
Z507
Z508
Z502
Z501
CR501
C501
C502
R503
R501
R502
R505
C540
C541
M501
C518
TO E506 ON V504A
X1502
S501
CONT S504B,BR
S504A CONT
S504B CONT
X1501
S506
TO C513
CAP. OF XV501
XV 501
T501
R516,Y
R505,R
X1501,GY
X1502,GY
2,T501,GY
C501,R
CONT,S504A,GY-R
R506
C515
C514
C516
C517
C518
C524
C523
C522
C513
R510,BLK
GND,BLK
M502
C510
C542
R517,O
TO 4,S506,BR
R508
R509
C509
C508
C507
C505
C504
T502
T1
T2
P1
P2
PHI
PLO
CR501
AC
HR 501
HR 502
R256
C523
C524
C525
C526
C527
R501
COIL
CT.COIL
E 553
GND, BL-R
A,P228, BL-R
C516
C515
C514
C513
L504
J506
T503
C517, GY
D,J508,GY-R
L501
R390
C516, GY
C515, GY
HR 502, GY
C,J508,GY
HR 502, GY
S505, GY
D1, E553, BR
2,T503, BR
3,T503, BR
Z 508, R-W
B, J508, Y
P, J508, O
BAC, E553, Y
ARM, S504, B-W
1, S505, GY
TO 4,S506,BR
GND
C503
C502
C501
R504
R505
R506
R507
R508
R509
R510
R511
R512
R513
R514
R515
R516
R517
R518
R519
R520
R521
R522
R523
R524
R525
R526
R527
R528
R529
R530
R531
R532
R533
R534
R535
R536
R537
R538
R539
R540
R541
R542
R543

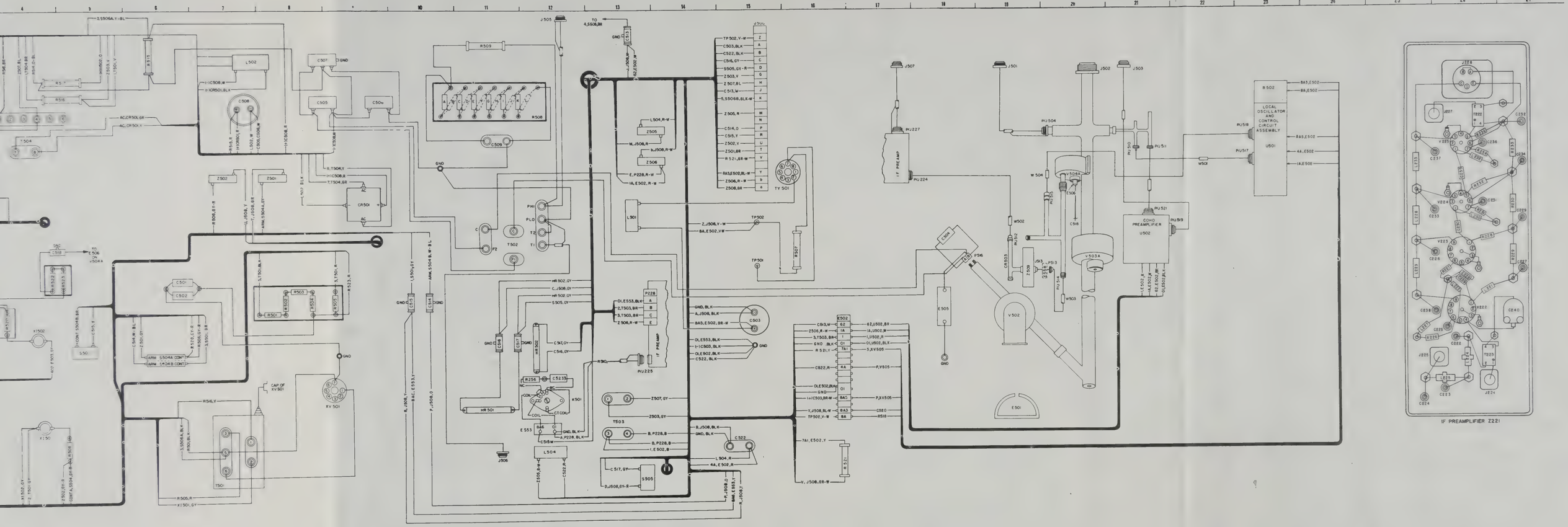
J505
J506
J507
J501
J502
J503
J504
R502
R503
R504
R505
R506
R507
R508
R509
L501
L502
L504
C501
C502
C503
C504
C505
C506
C507
C508
C509
C514
C515
C516
C517
C518
C522
C523
C524
C525
C526
C527
C528
C529
C530
C531
C532
C533
C534
C535
C536
C537
C538
C539
C540
C541
C542
C543
C544
C545
C546
C547
C548
C549
C550
C551
C552
C553
C554
C555
C556
C557
C558
C559
C560
C561

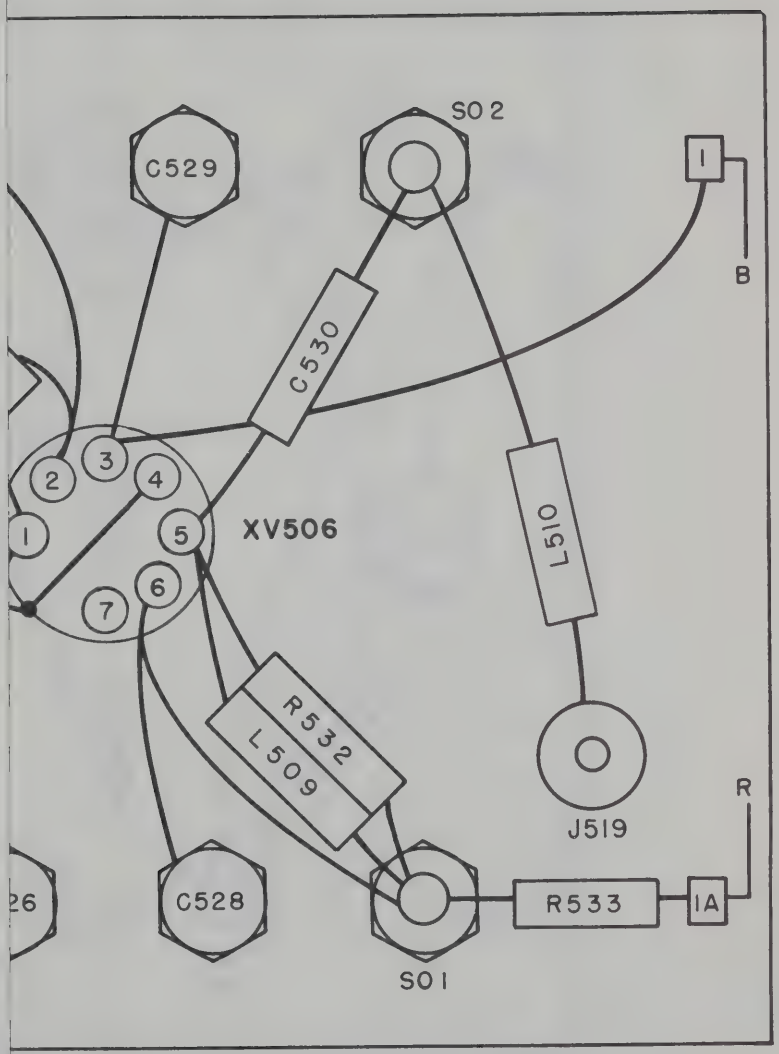

Figure 7—103. Coho Preamplifier Practical Wiring Diagram

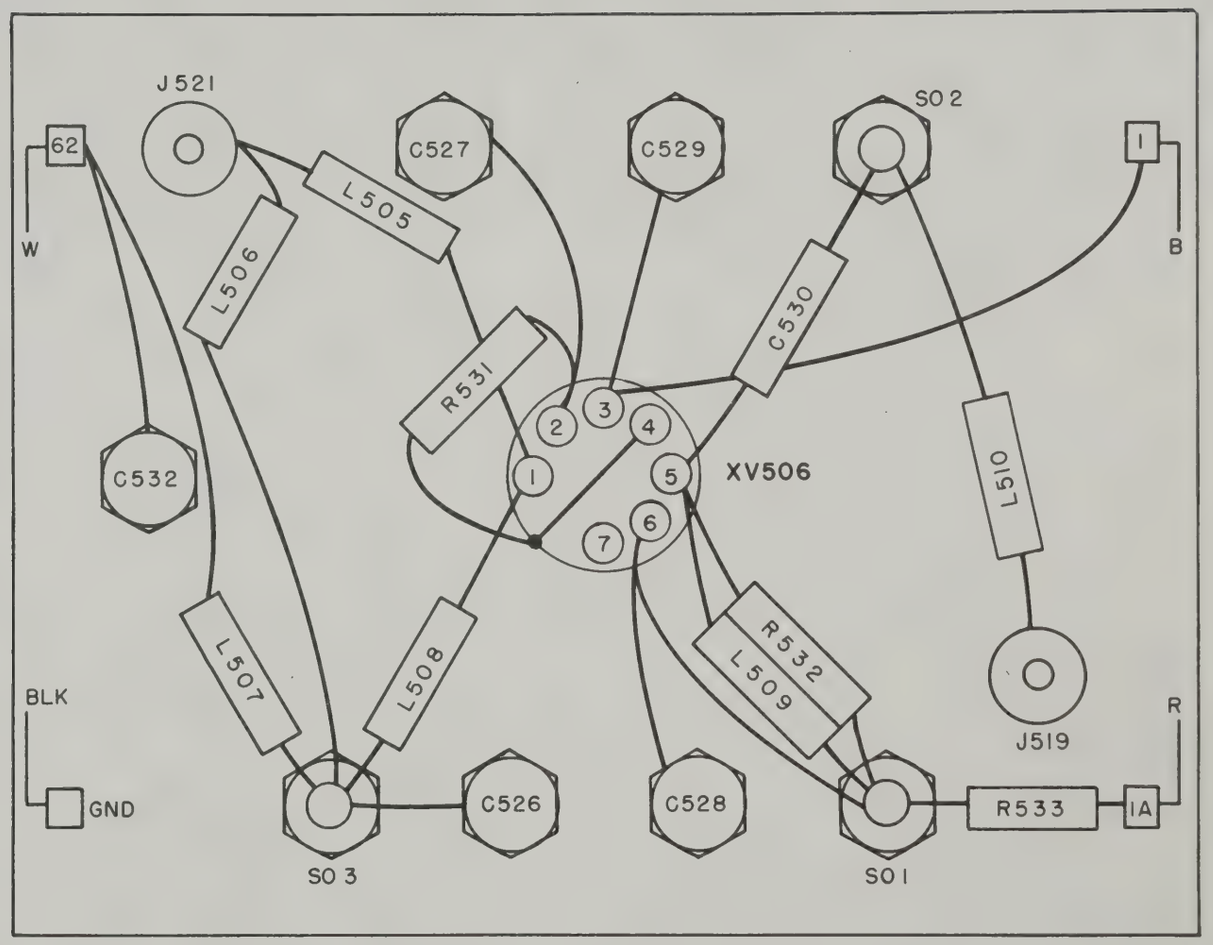

Figure 7—103. Coho Preamplifier Practical Wiring Diagram

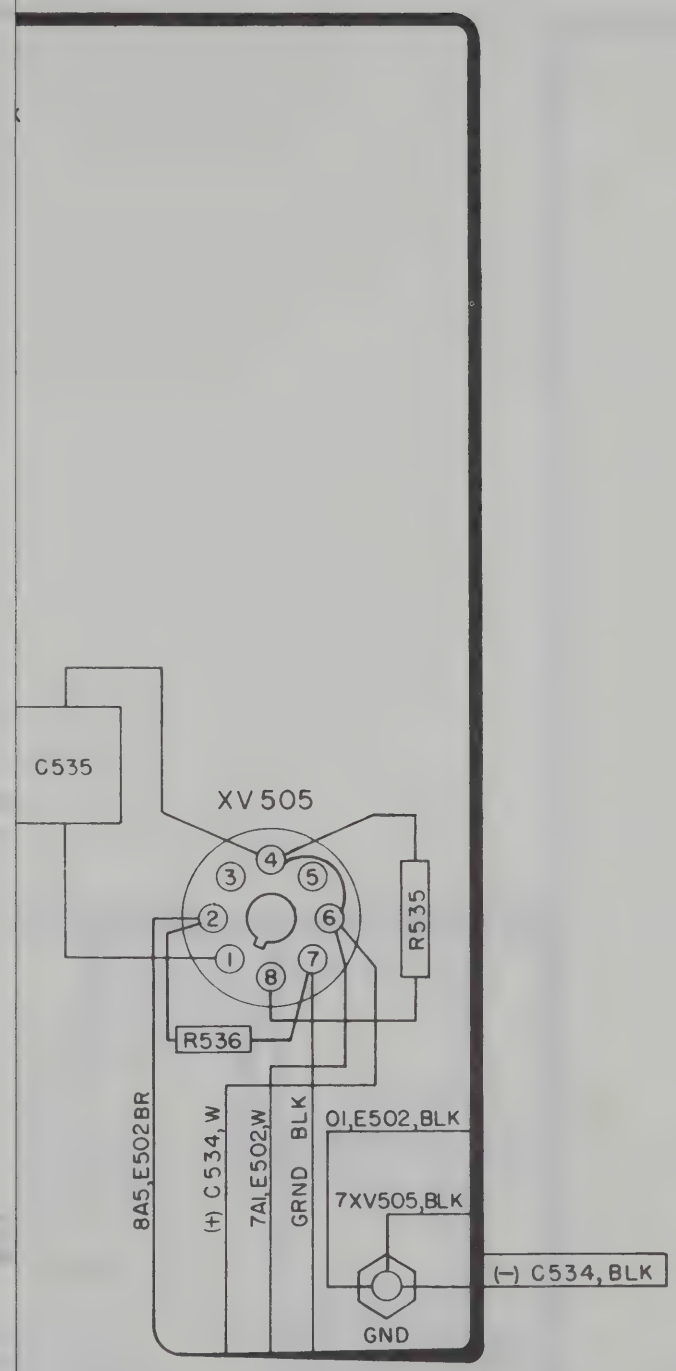

Figure 7—104. Local Oscillator and Control Assembly Practical Wiring Diagram

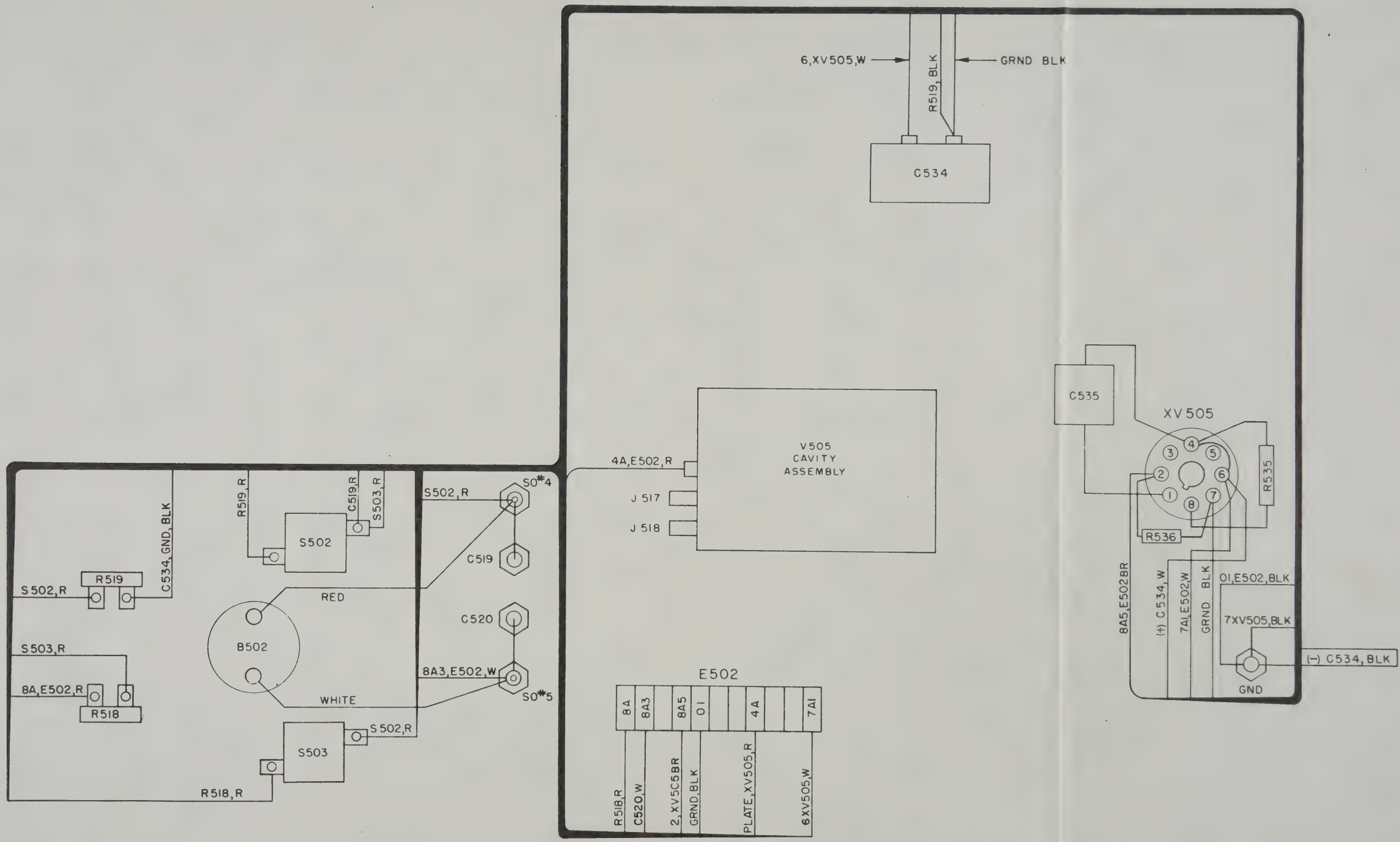

Figure 7—104. Local Oscillator and Control Assembly Practical Wiring Diagram

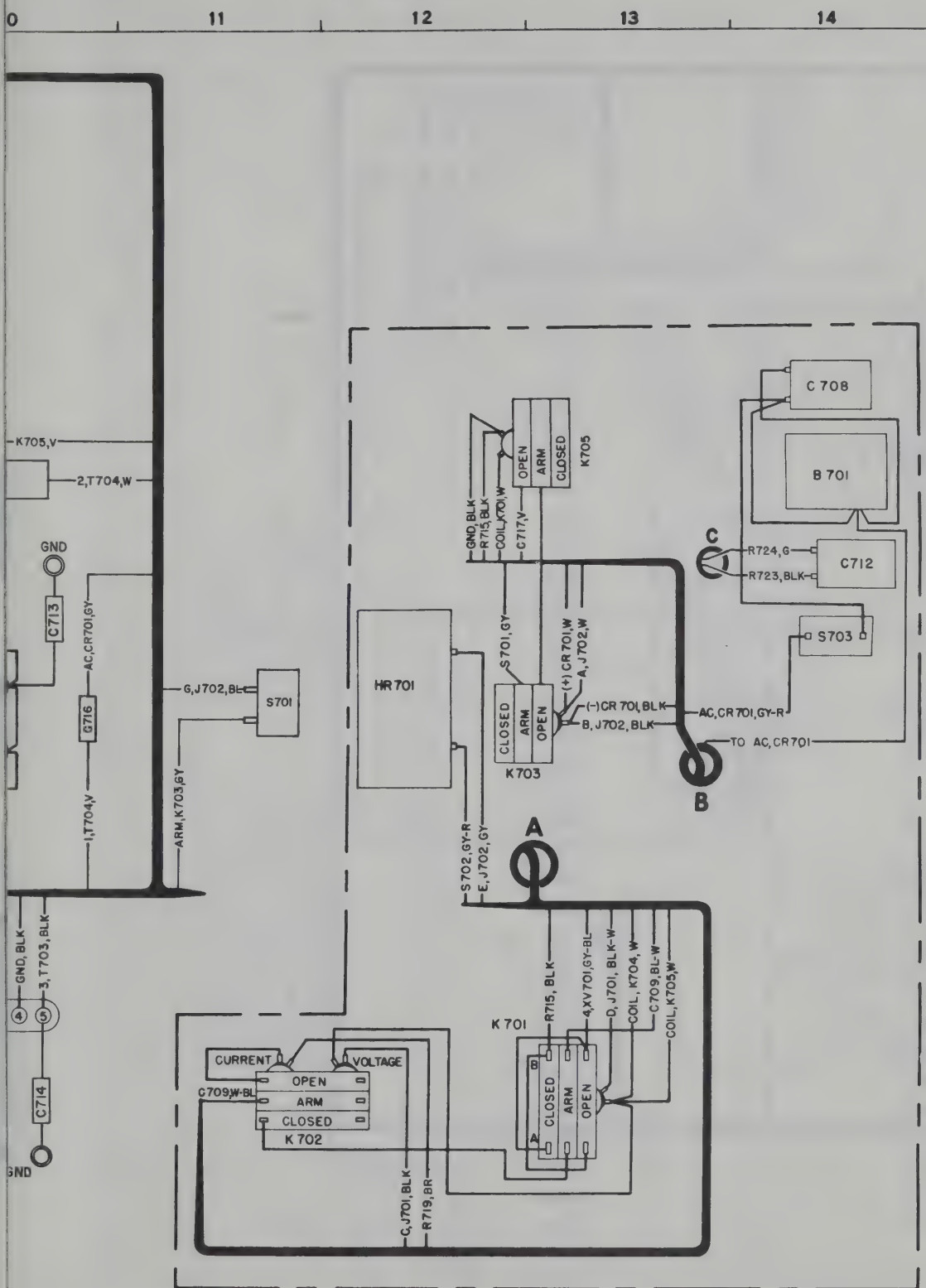

Figure 7—105. Antenna Base Practical Wiring Diagram (Servo Amplifier)

COMPONENT LOCATIONS

SYMBOL	VERT	HORIZ	SYMBOL	VERT	HORIZ
B701	14	C	R710	7	D
C701	10	D	R711	6	A
C702	10	D	R712	5	A
C703	9	E	R713	5	A
C704	8	E	R714	5	A
C705	2	E	R715	5	A
C706	3	G	R716	9	E
C707	2	G	R717	7	C
C708	14	B	R718	8	F
C709	5	C	R719	2	G
C710	7	C	R720	9	E
C711	3	A	R721	7	B
C716	10	D	R722	6	A
C717	10	D	R723	5	A
CR701	6	D	R724	6	A
HR701	12	D	R725	6	A
J701	1	C	R726	6	A
J702	1	D	S701	11	D
K701	13	F	S702	5	B
K702	11	F	S703	14	C
K703	12	D	T701	8	B
K704	4	E	T702	2	A
K705	13	B	T703	6	E
R701	9	F	T704	10	E
R702	8	E	TP701	4	C
R703	9	F	TP702	4	C
R704	8	E	XV701	8	C
R705	8	E	XV702	8	D
R706	8	E	XV703	3	C
R707	7	E	XV704	3	C
R708	8	F	XV705	3	B
R709	8	F	XV706	3	D

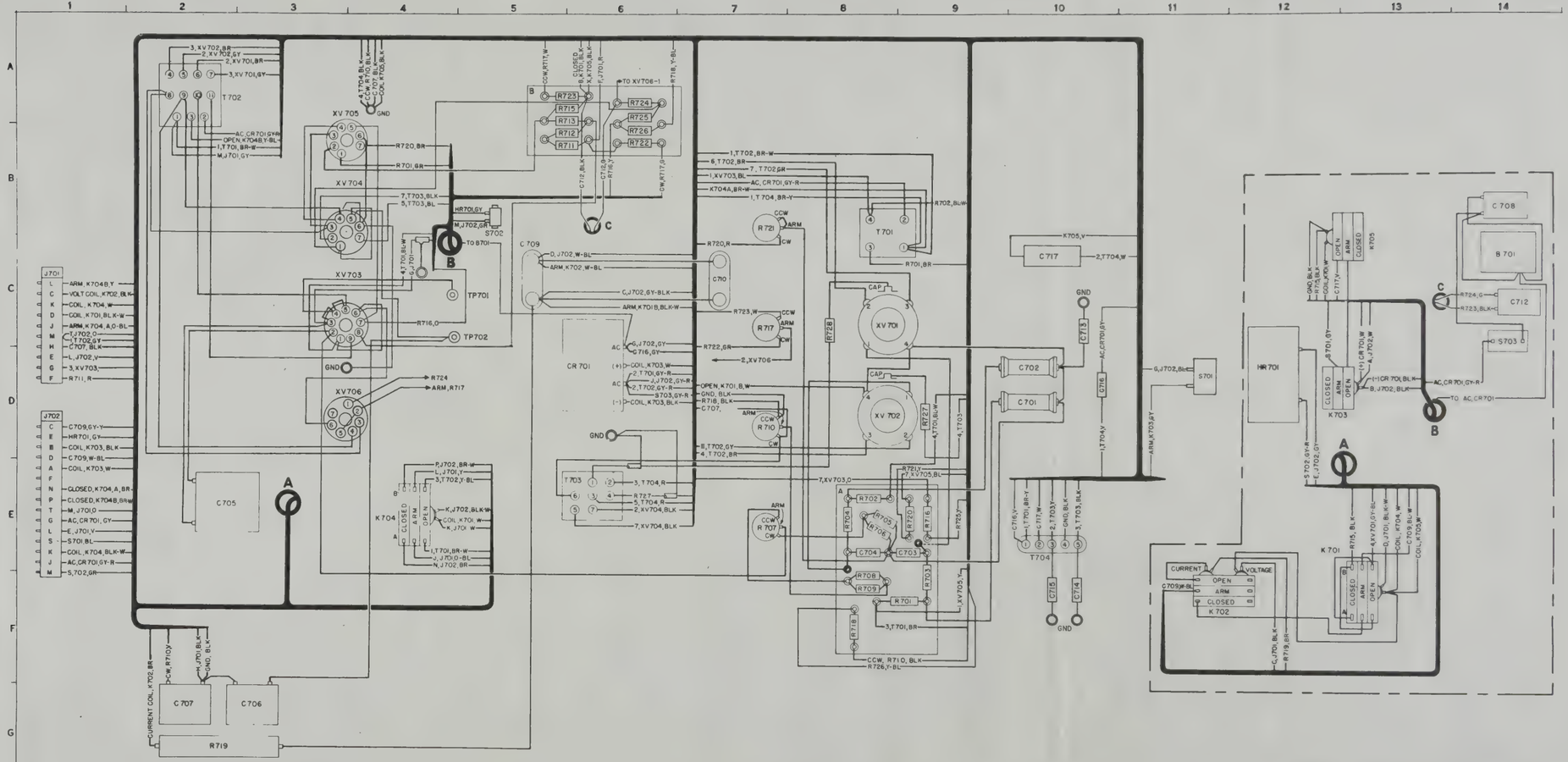

Figure 7—105. Antenna Base Practical Wiring Diagram (Servo Amplifier)

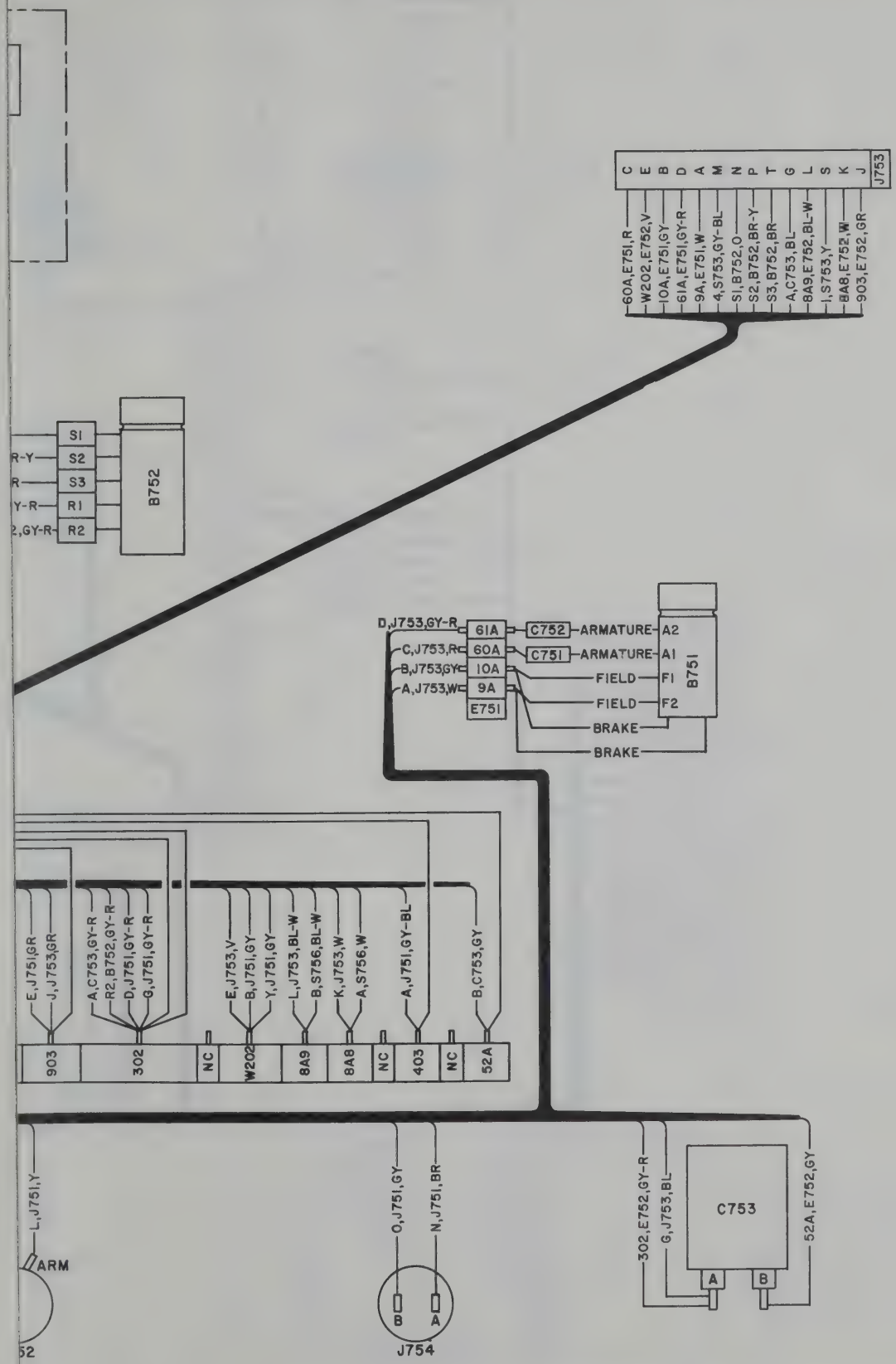

Figure 7—106. Antenna Base Practical Wiring Diagram (Drive Motor)

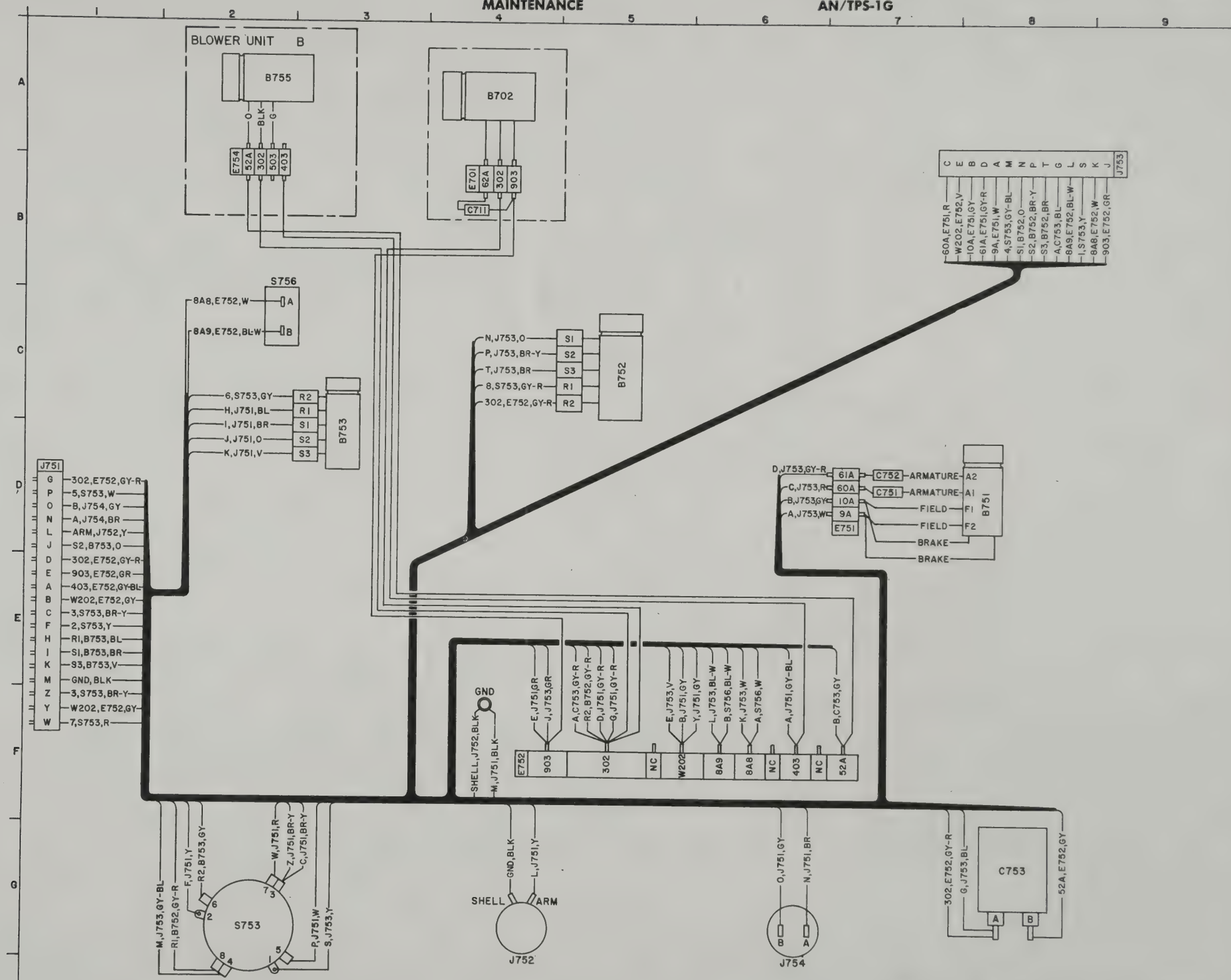

Figure 7–106. Antenna Base Practical Wiring Diagram (Drive Motor)

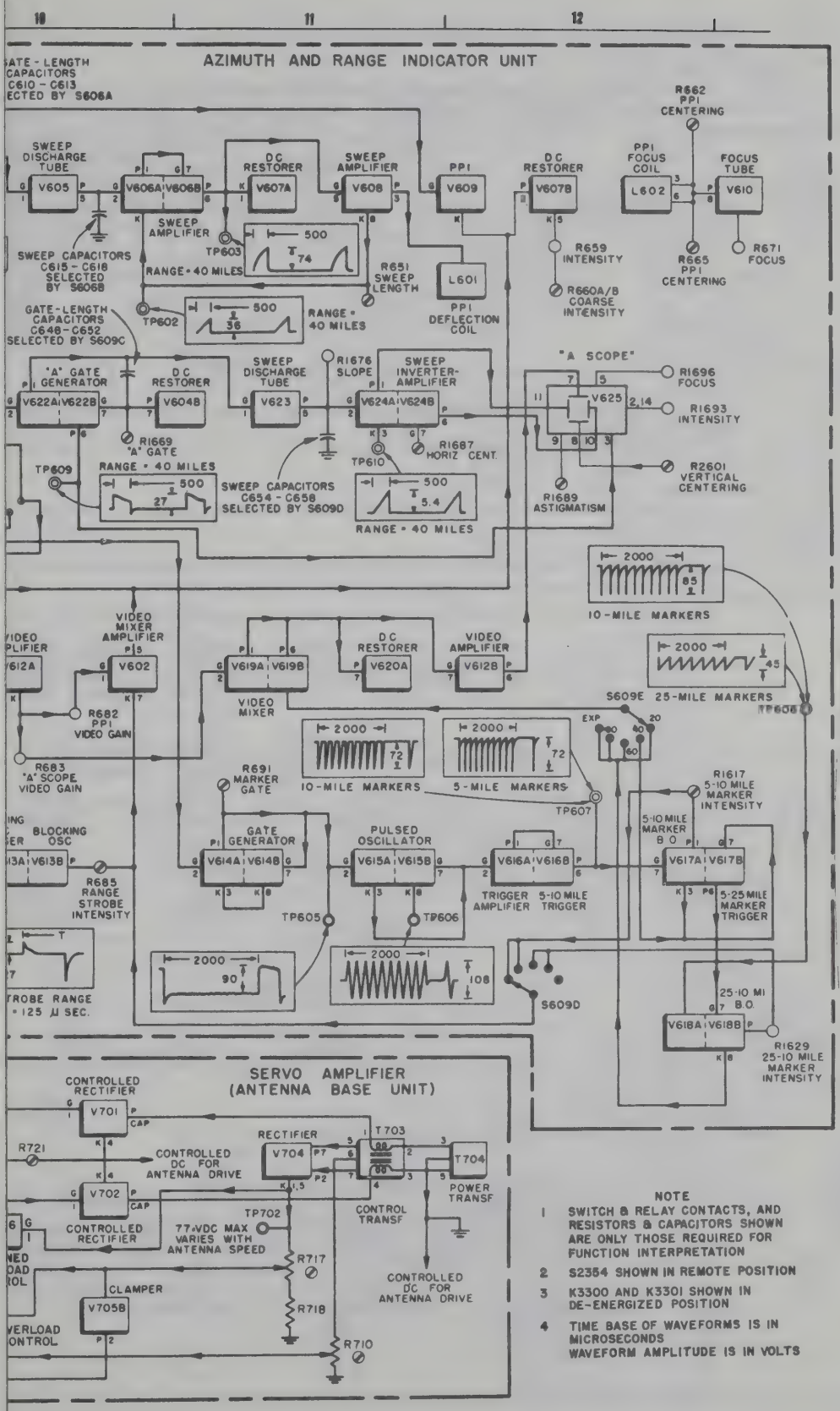

Figure 7—107. Servicing Block Diagram

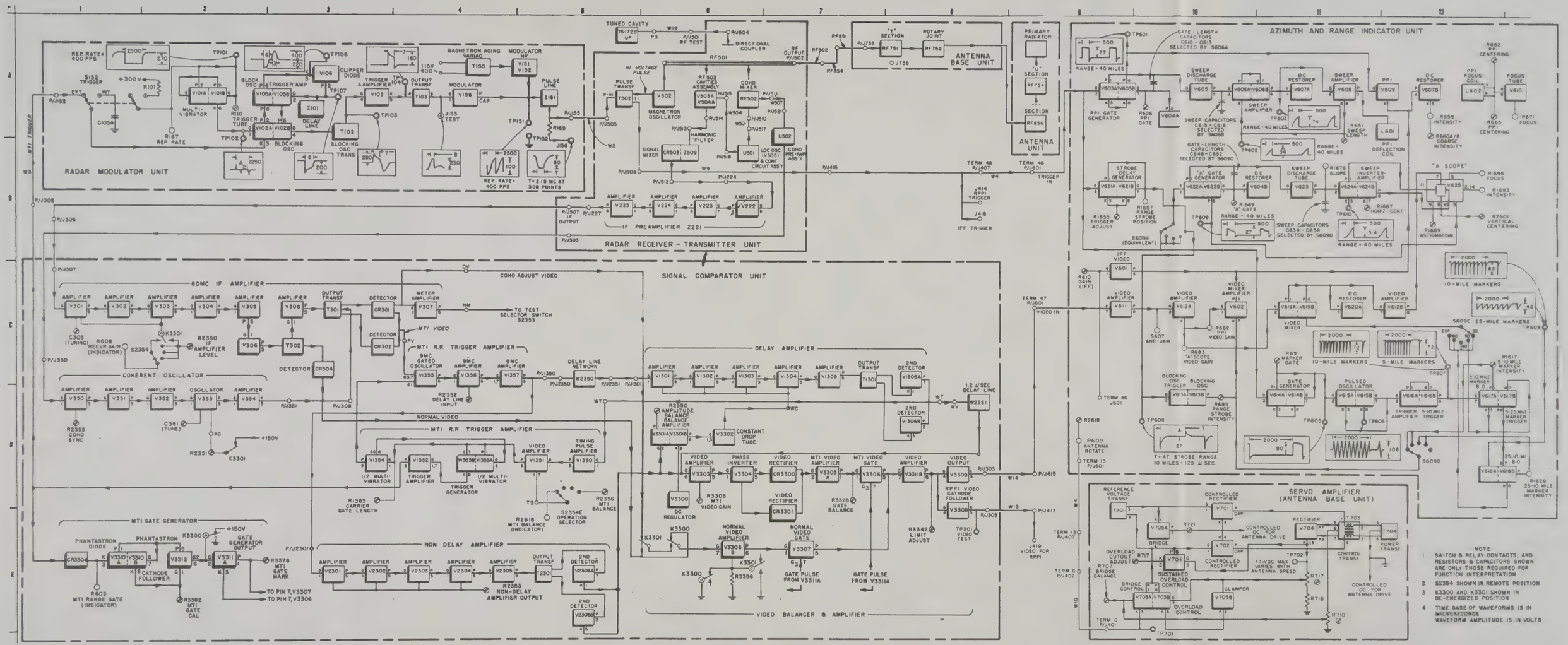
RADAR MODULATOR UNIT
RADAR RECEIVER - TRANSMITTER UNIT
SIGNAL COMPARATOR UNIT
AZIMUTH AND RANGE INDICATOR UNIT
SERVO AMPLIFIER (ANTENNA BASE UNIT)
ANTENNA BASE UNIT
ANTENNA UNIT
PRIMARY RADIATOR
60MC IF AMPLIFIER
COHERENT OSCILLATOR
MTI GATE GENERATOR
MTI R.R. TRIGGER AMPLIFIER
NON DELAY AMPLIFIER
DELAY AMPLIFIER
VIDEO BALANCER & AMPLIFIER
IF PREAMPLIFIER Z221
NOTE
1 SWITCH & RELAY CONTACTS, AND RESISTORS & CAPACITORS SHOWN ARE ONLY THOSE REQUIRED FOR FUNCTION INTERPRETATION
2 S2354 SHOWN IN REMOTE POSITION
3 K3300 AND K3301 SHOWN IN DE-ENERGIZED POSITION
4 TIME BASE OF WAVEFORMS IS IN MICROSECONDS
WAVEFORM AMPLITUDE IS IN VOLTS

Figure 7—107. Servicing Block Diagram

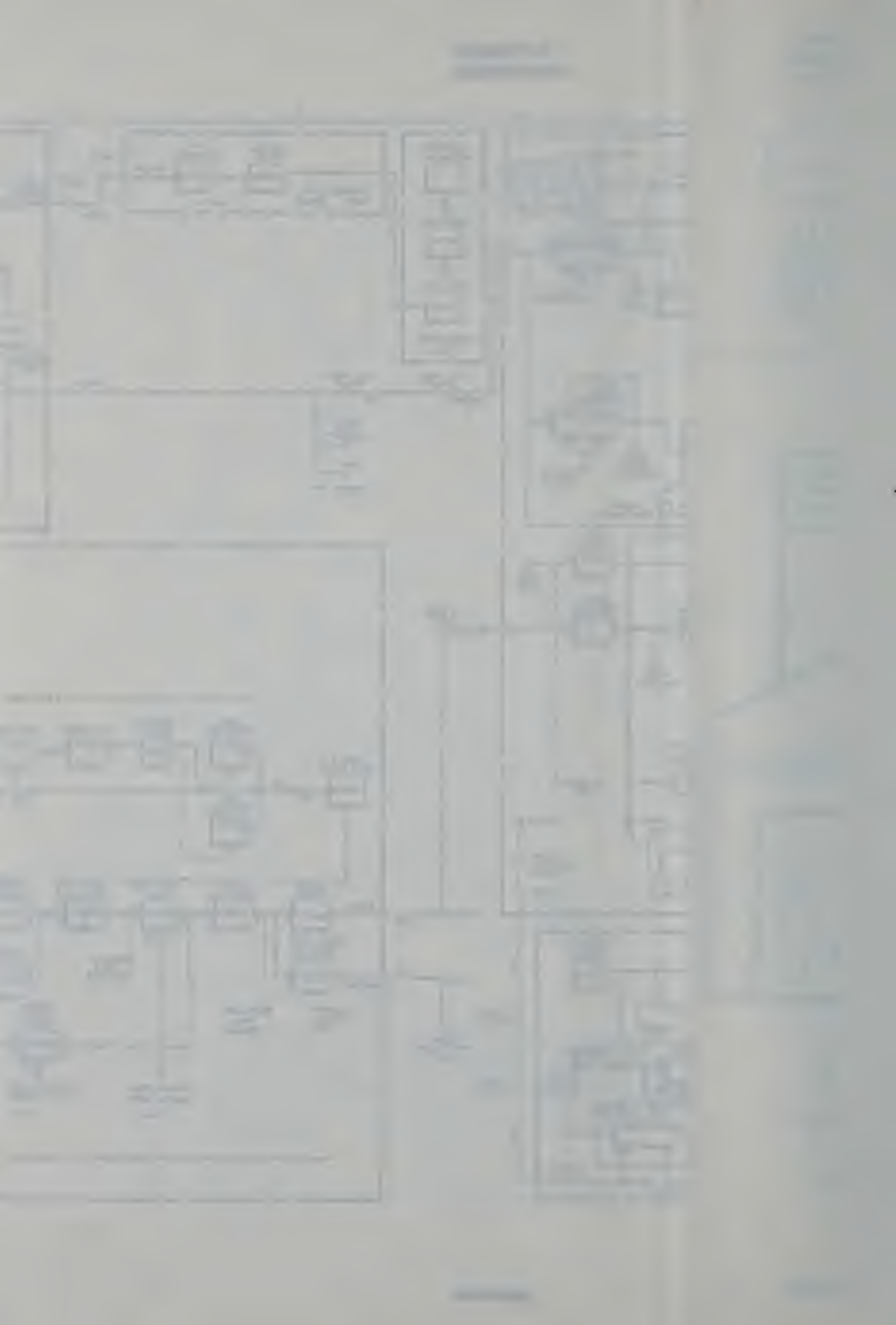

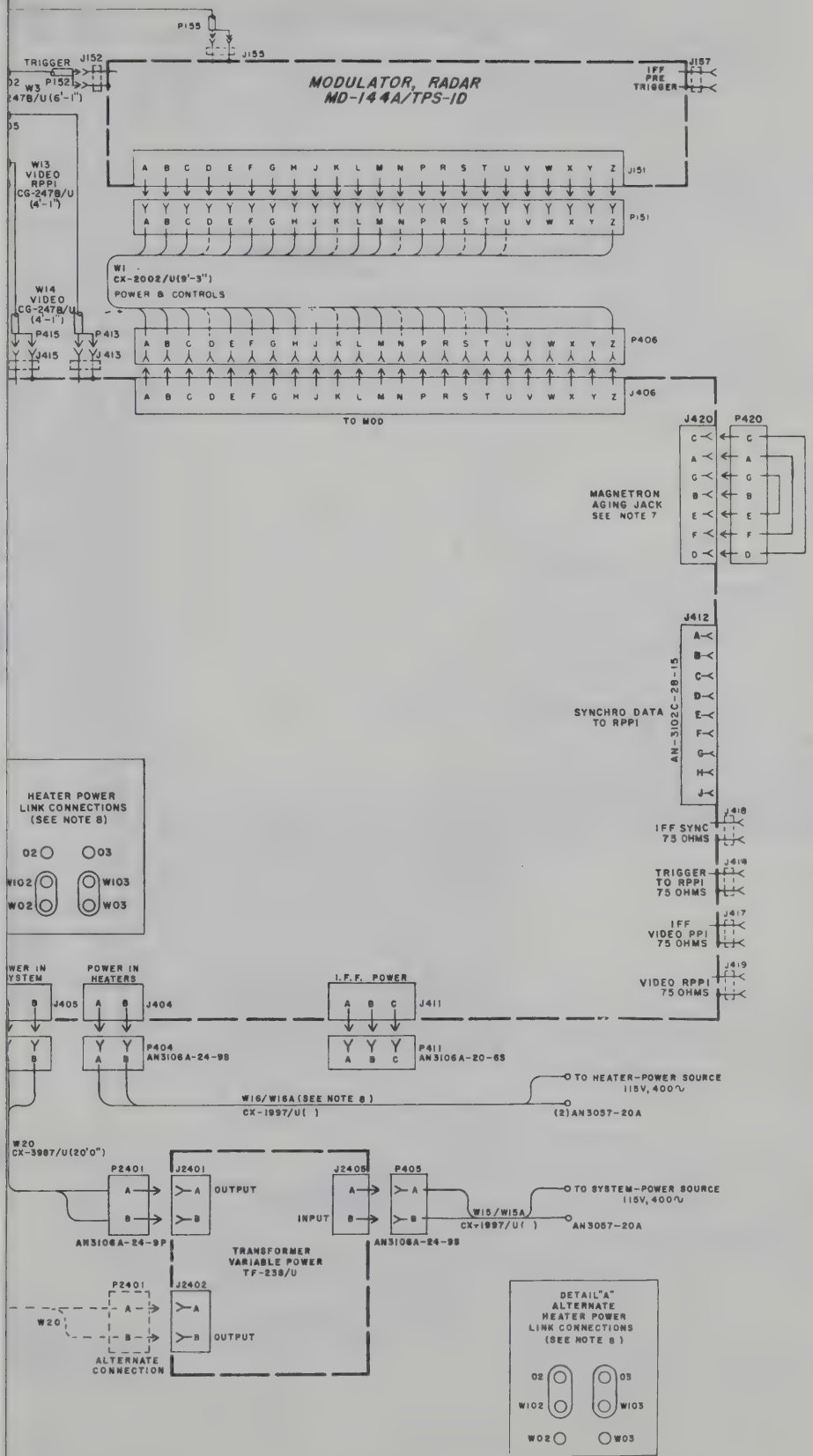

Figure 7—108. External Cabling

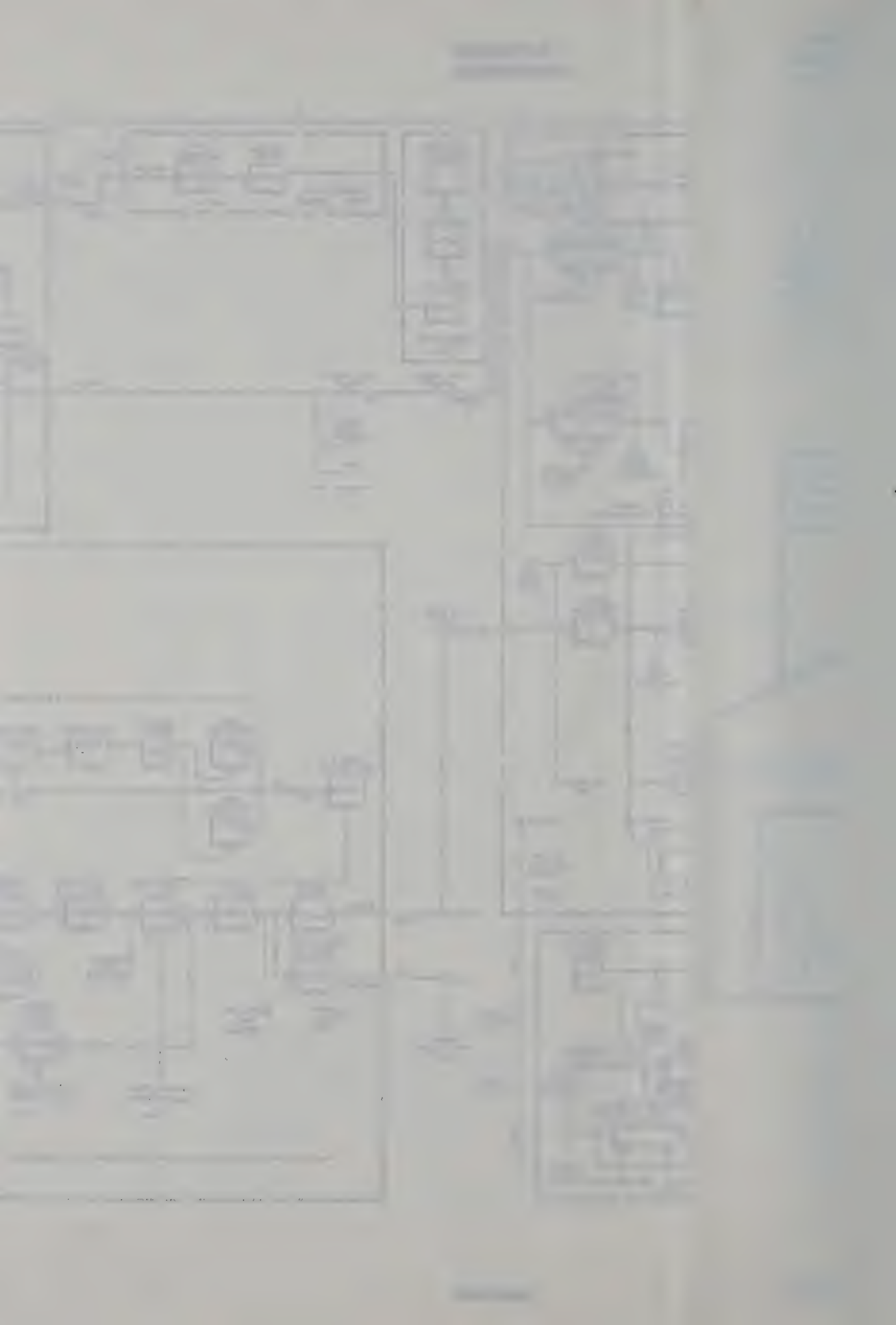

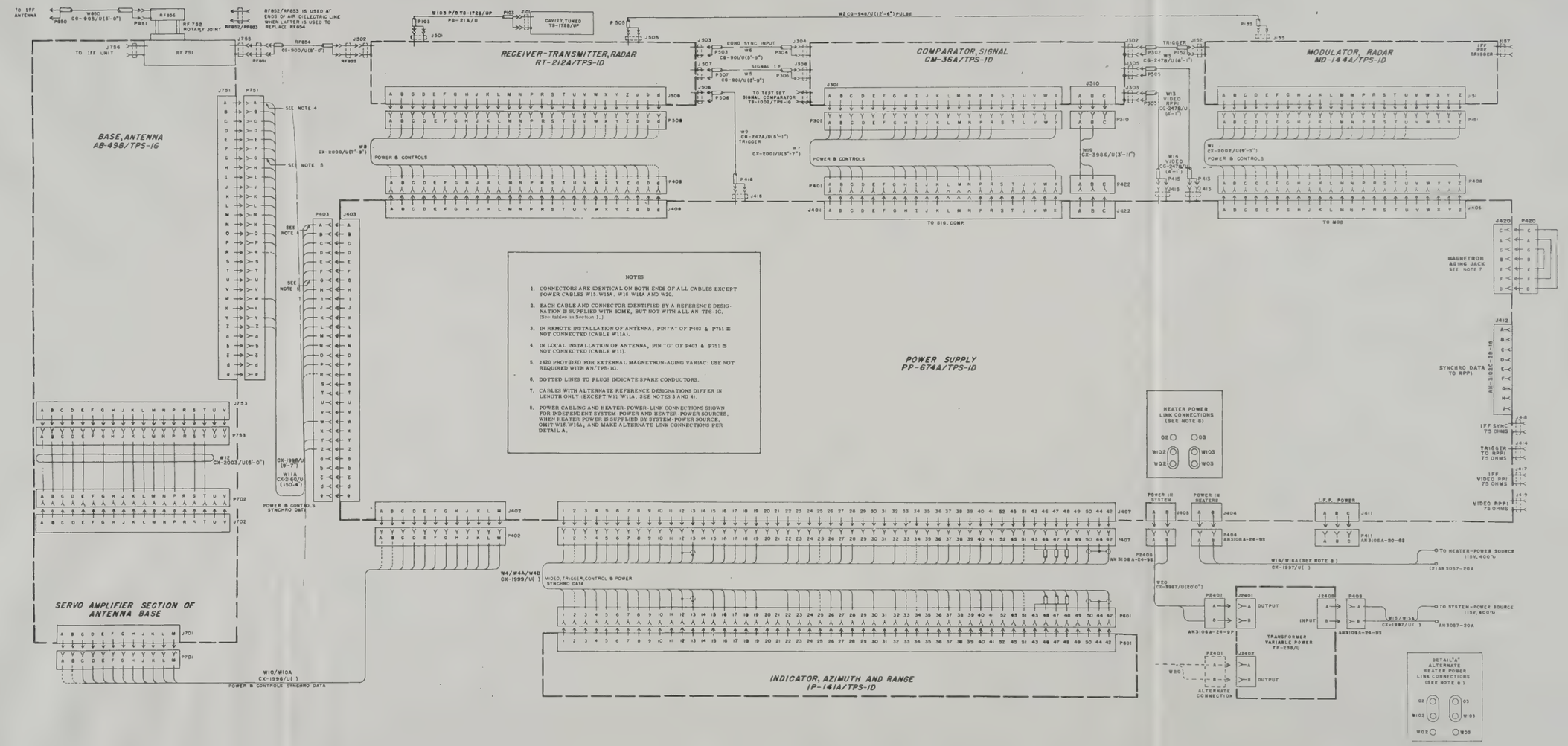
BASE, ANTENNA AB-498/TPS-1G
SERVO AMPLIFIER SECTION OF ANTENNA BASE
RECEIVER-TRANSMITTER, RADAR RT-212A/TPS-1D
COMPARATOR, SIGNAL CM-36A/TPS-1D
MODULATOR, RADAR MD-144A/TPS-1D
POWER SUPPLY PP-674A/TPS-1D
INDICATOR, AZIMUTH AND RANGE IP-141A/TPS-1D
NOTES
1. CONNECTORS ARE IDENTICAL ON BOTH ENDS OF ALL CABLES EXCEPT POWER CABLES W15, W15A, W16, W16A AND W20.
2. EACH CABLE AND CONNECTOR IDENTIFIED BY A REFERENCE DESIGNATION IS SUPPLIED WITH SOME, BUT NOT WITH ALL AN/TPS-1G. (Error taken in Section 1.)
3. IN REMOTE INSTALLATION OF ANTENNA, PIN "A" OF P403 & P751 IS NOT CONNECTED (CABLE W11A).
4. IN LOCAL INSTALLATION OF ANTENNA, PIN "G" OF P403 & P751 IS NOT CONNECTED (CABLE W11).
5. J420 PROVIDED FOR EXTERNAL MAGNETRON-AGING VARIAC; USE NOT REQUIRED WITH AN/TPS-1G.
6. DOTTED LINES TO PLUGS INDICATE SPARE CONDUCTORS.
7. CABLES WITH ALTERNATE REFERENCE DESIGNATIONS DIFFER IN LENGTH ONLY (EXCEPT W11, W11A, SEE NOTES 3 AND 4).
8. POWER CABLING AND HEATER-POWER-LINK CONNECTIONS SHOWN FOR INDEPENDENT SYSTEM-POWER AND HEATER-POWER SOURCES. WHEN HEATER POWER IS SUPPLIED BY SYSTEM-POWER SOURCE, OMIT W15, W15A, AND MAKE ALTERNATE LINK CONNECTIONS PER DETAIL A.
HEATER POWER LINK CONNECTIONS (SEE NOTE 8)
DETAIL "A" ALTERNATE HEATER POWER LINK CONNECTIONS (SEE NOTE 8)
TRANSFORMER VARIABLE POWER TF-238/U
TO SYSTEM-POWER SOURCE (115V, 400~)
TO HEATER-POWER SOURCE (115V, 400~)
MAGNETRON AGING JACK SEE NOTE 7
SYNCHRO DATA TO RPPI
IFF SYNC 75 OHMS
TRIGGER TO RPPI 75 OHMS
IFF VIDEO RPPI 75 OHMS
VIDEO RPPI 75 OHMS

Figure 7—108. External Cabling

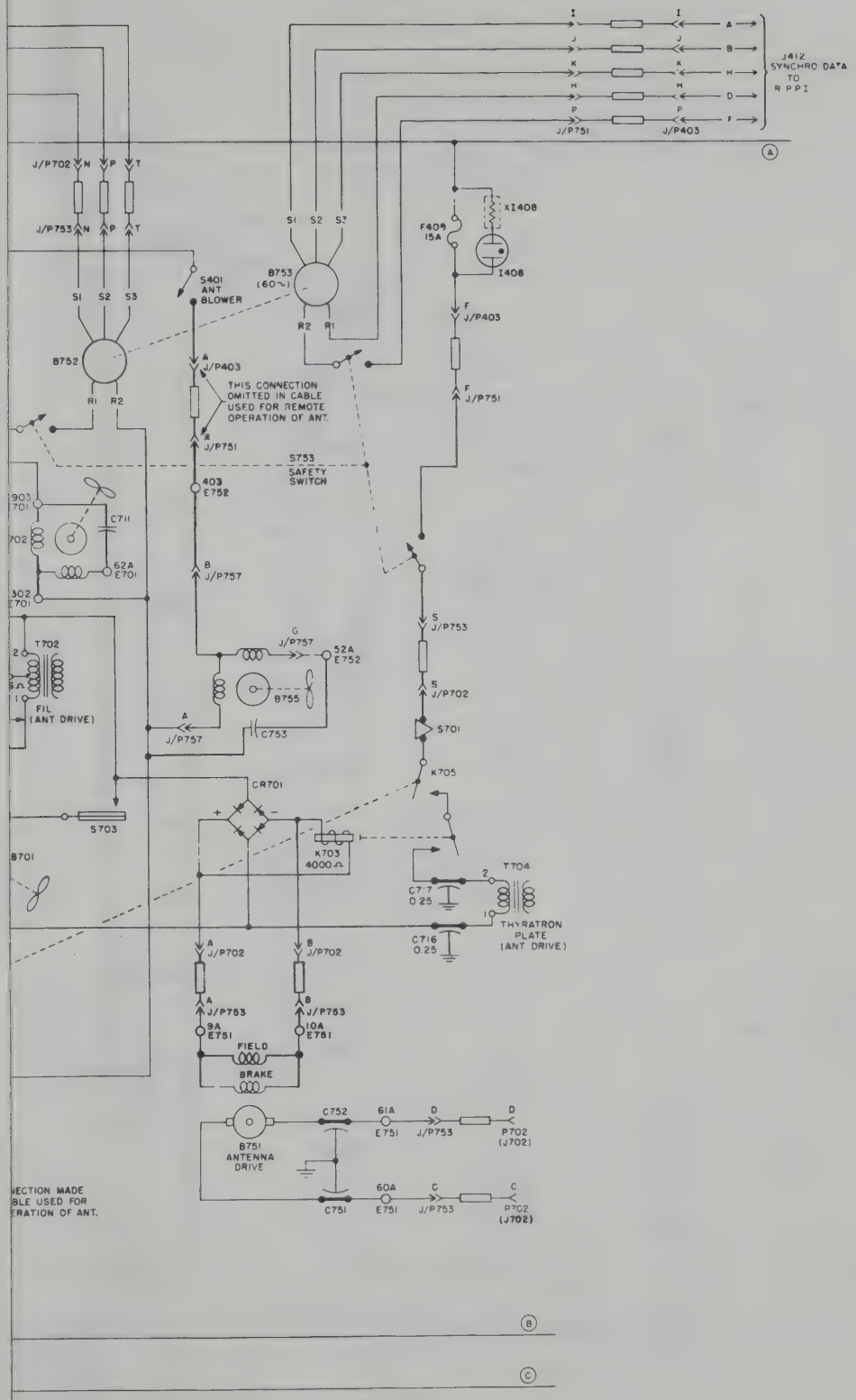

Figure 7—109. Primary Power and DC Control Circuits (Sheet 1 of 2)

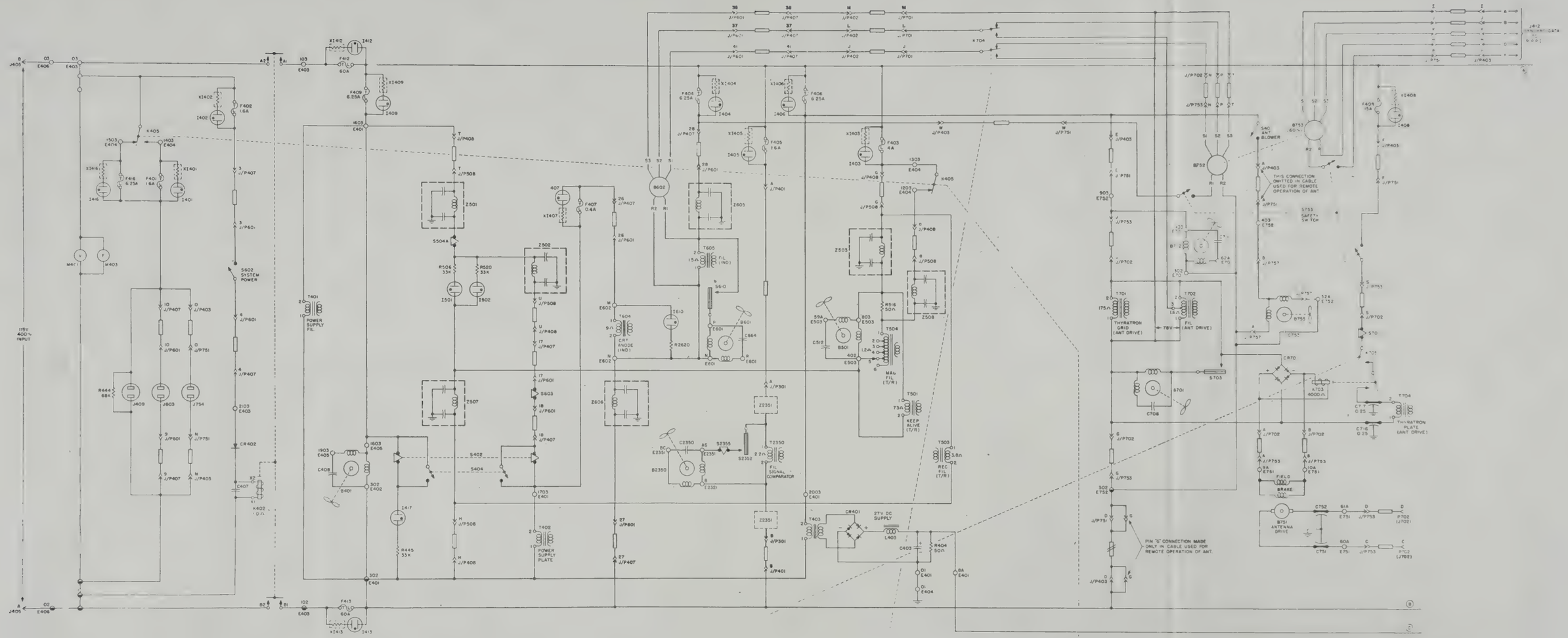

Figure 7–109. Primary Power and DC Control Circuits (Sheet 1 of 2)

LOCATION OF COMPONENTS
BY SYMBOL NUMBER

101-199	MODULATOR	401-499	POWER SUPPLY
201-299	RECEIVER	501-599	TRANSMITTER
301-399		601-699	
1301-1399	SIGNAL	1601-1699	INDICATOR
2301-2399	COMPARATOR	2601-2699	
3301-3399		701-799	ANTENNA BASE

FUNCTION OF COMPONENTS

MOTORS

B151	BLOWER
B401	BLOWER
B501	BLOWER
B502	LO REMOTE TUNING
B601	BLOWER
B602	INDICATOR SYNCHRO
B701	BLOWER
B702	BLOWER MOTOR
B751	ANTENNA
B752	ANT SYNCHRO
B753	ANT SYNCHRO
B755	BLOWER
B2350	BLOWER

CAPACITORS

C158	B151 PHASE SHIFTING
C159	AC LINE FILTER
C160	AC LINE FILTER
C161	AC LINE FILTER
C162	AC LINE FILTER
C163	AC LINE FILTER
C164	AC LINE FILTER
C165	AC LINE FILTER
C166	AC LINE FILTER
C167	DC LINE FILTER
C168	DC LINE FILTER
C170	AC LINE FILTER
C171	AC LINE FILTER
C403	CR401 FILTER
C407	CR402 FILTER
C408	B401 PHASE SHIFTING
C513	B501 PHASE SHIFTING
C516	LINE FILTER
C517	LINE FILTER
C533	ARC SUPPRESSOR
C644	B601 PHASE SHIFTING
C709	B701 PHASE SHIFTING
C711	B702 PHASE SHIFTING
C716	AC LINE FILTER
C717	AC LINE FILTER
C753	B755 PHASE SHIFTING
C2350	B2350 PHASE SHIFTING

RECTIFIERS

CR401	SYSTEM DC SUPPLY
CR402	K402 MAIN CONTACTOR
CR701	751 FIELD SUPPLY

FUSES

F401	SERVICING OUTLETS (RADIATE)
F402	K402 MAIN CONTACTOR
F403	T404, T503, T504, T501
F404	T605, B601, B602, B752
F405	T2350, B2350
F406	T403, T701, B755, CR701
F407	T604
F408	T704
F409	B401, T402
F410	T101, B151, T152, T153
F411	T151
F412	MAIN SYSTEM
F413	MAIN SYSTEM
F414	HEATER BUS
F415	HEATER BUS
F416	SERVICING OUTLETS (STANDBY)

HEATERS

HR151	SPACE HEATER
HR152	SPACE HEATER
HR401	SPACE HEATER
HR501	SPACE HEATER
HR502	SPACE HEATER
HR601	SPACE HEATER
HR701	SPACE HEATER
HR2351	SPACE HEATER

INDICATORS

I151	MODULATOR HV WARNING
I152	MODULATOR HV WARNING
I153	MODULATOR HV WARNING
I401	BLOWN FUSE INDICATOR
THRU	F401 THRU F416
I416	
I417	POWER SUPPLY HV WARNING
I501	REC-TRANS HV WARNING
I502	REC-TRANS HV WARNING
I610	INDICATOR HV WARNING

RECEPTACLES

J409	SERVICING OUTLET POWER SUPPLY
J603	SERVICING OUTLET INDICATOR
J754	SERVICING OUTLET ANTENNA

RELAYS

K153	RADIATE
K401	HV DELAY TIMER
K402	MAIN ON-OFF CONTACTOR
K403	K401 SLAVE RELAY
K406	RADIATE INTERLOCKING
K601	CRYSTAL SHUTTER ACTUATOR
K701	ANTENNA REVERSING
K702	ANTENNA REVERSING
K703	T704 PROTECTIVE

INDUCTORS

L403	CR401 FILTER
L501	LO FILAMENT FILTER

METERS

M401	AC LINE VOLTAGE
M402	OPERATING HOURS
M403	AC FREQUENCY

RESISTORS

R171	CURRENT LIMITING FOR I151
R172	CURRENT LIMITING FOR I152
R173	CURRENT LIMITING FOR I153
R404	CR401 FILTER
R443	K401 CURRENT LIMITING
R444	BLOWN FUSE INDICATOR LOAD
R445	CURRENT LIMITING FOR I417
R506	CURRENT LIMITING FOR I501
R507	LO FILAMENT CURRENT LIMITING
R516	MAG. FILAMENT VOLTAGE DROPPING
R518	B502 CURRENT LIMITING
R519	B502 CURRENT LIMITING
R520	CURRENT LIMITING FOR I502
R526	ARC SUPPRESSOR
R620	CURRENT LIMITING FOR I610

SWITCHES

S151	HIGH VOLTAGE GROUNDING
S153	INTERLOCK
S154	FOR B151
S155	FOR HR151 AND 152
S156	MAG. AGING VARIAC
S401	B755 ON-OFF
S402	INTERLOCK
S403	FOR HR401
S404	INTERLOCK
S501	REC-TRANS OVER TEMP
S502	B502 LIMIT
S504	INTERLOCK
S505	FOR HR501 AND 502
S506	B502 LIMIT
S601	MTI NORMAL
S602	SYSTEM ON-OFF
S610	FOR B601
S611	FOR HR601
S612	INDICATOR SYNCHRO
S613	LO MOTOR TUNE
S615	RADIATE OFF
S616	RADIATE ON
S617	ANTENNA ROTATION
S618	ANTENNA ROTATION
S701	INTERLOCK
S702	FOR HR701
S703	FOR B701
S753	ANTENNA SAFETY
S756	ANTENNA SYNCHRO
S2351	FOR HR2351
S2352	FOR B2350
S2354	MTI NORMAL
S2355	INTERLOCK

SURGE ELIMINATORS

TY501	LO FILAMENT

TRANSFORMERS

T101	FILAMENT
T151	HIGH VOLTAGE
T152	FILAMENT
T153	FILAMENT
T155	MAG. AGING VARIAC
T401	FILAMENT
T402	PLATE
T403	SYSTEM DC SUPPLY
T501	KEEP ALIVE
T503	FILAMENT
T504	MAGNETRON FIL
T604	CRT ANODE HV
T605	FILAMENT
T701	V701 & V702 REFERENCE
T702	FILAMENT
T704	V701 & V702 PLATE
T2350	FILAMENT

LINE FILTERS

Z151	MODULATOR
Z152	MODULATOR
Z153	MODULATOR
Z154	MODULATOR
Z155	MODULATOR
Z156	MODULATOR
Z158	MODULATOR
Z159	MODULATOR
Z501	REC-TRANS
Z502	REC-TRANS
Z503	REC-TRANS
Z507	REC-TRANS
Z508	REC-TRANS
Z605	INDICATOR
Z606	INDICATOR
Z607	INDICATOR
Z2351	SIGNAL COMPARATOR

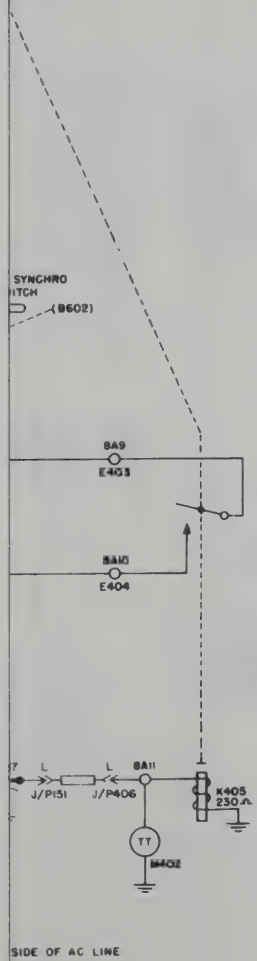

Figure 7—109. Primary Power and DC Control Circuits (Sheet 2 of 2)

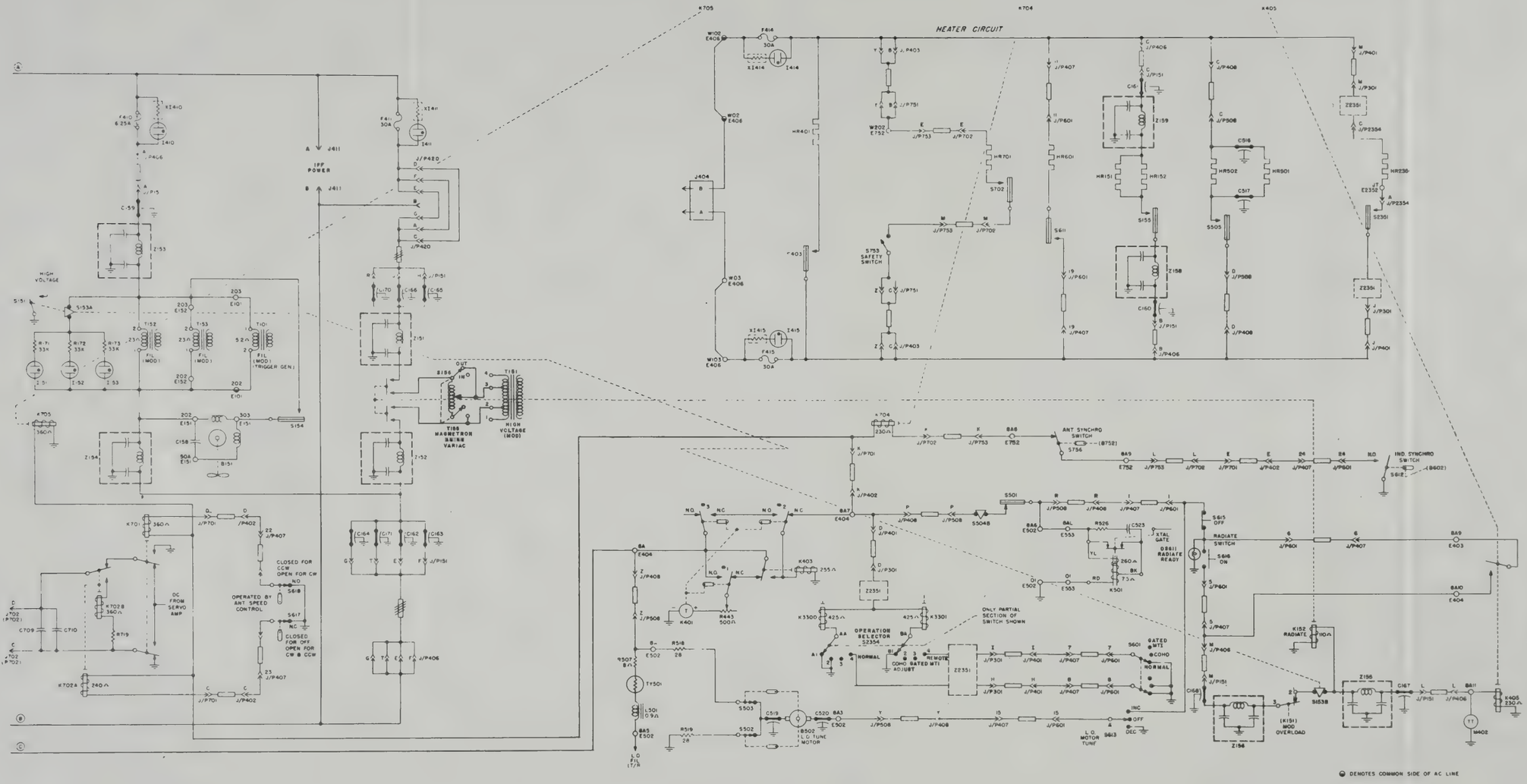

LOCATION OF COMPONENTS
BY SYMBOL NUMBER

101-199	MODULATOR	401-499	POWER SUPPLY
201-299	RECEIVER	501-599	TRANSMITTER
301-399		601-699	
1301-1399	SIGNAL	1401-1499	INDICATOR
2301-2399	COMPARATOR	2401-2499	
3301-3399		701-799	ANTENNA BASE

FUNCTION OF COMPONENTS

MOTORS

B151	BLOWER
B401	BLOWER
B501	BLOWER
B502	LO REMOTE TUNING
B601	BLOWER
B602	INDICATOR SYNCHRO
B701	BLOWER
B702	BLOWER MOTOR
B751	ANTENNA
B752	ANT SYNCHRO
B753	ANT SYNCHRO
B756	BLOWER
B2350	BLOWER

CAPACITORS

C158	B151 PHASE SHIFTING
C159	AC LINE FILTER
C160	AC LINE FILTER
C161	AC LINE FILTER
C163	AC LINE FILTER
C165	AC LINE FILTER
C166	AC LINE FILTER
C169	AC LINE FILTER
C170	AC LINE FILTER
C171	DC LINE FILTER
C400	DC LINE FILTER
C401	CR401 FILTER
C402	CR402 FILTER
C403	B401 PHASE SHIFTING
C502	B501 PHASE SHIFTING
C516	LINE FILTER
C517	LINE FILTER
C583	ARC SUPPRESSOR
C684	B681 PHASE SHIFTING
C708	B701 PHASE SHIFTING
C711	B703 PHASE SHIFTING
C718	AC LINE FILTER
C717	AC LINE FILTER
C783	B753 PHASE SHIFTING
C2350	B2350 PHASE SHIFTING

RECTIFIERS

CR401	SYSTEM DC SUPPLY
CR402	K402 MAIN CONTACTOR
CR701	761 FIELD SUPPLY

FUSES

F401	SERVICING OUTLETS (RADIATE)
F402	K402 MAIN CONTACTOR
F403	T404, T502, T504, T701
F404	T705, B602, B603, B753
F405	T2350, B2350
F406	T403, T701, B756, CR701
F407	T704
F408	T704
F409	B401, T402
F410	T101, B151, T152, T153
F411	T151
F412	MAIN SYSTEM
F413	MAIN SYSTEM
F414	HEATER BUS
F415	HEATER BUS
F416	SERVICING OUTLETS (STANDBY)

HEATERS

HR151	SPACE HEATER
HR152	SPACE HEATER
HR401	SPACE HEATER
HR402	SPACE HEATER
HR501	SPACE HEATER
HR502	SPACE HEATER
HR701	SPACE HEATER
HR2351	SPACE HEATER

INDICATORS

I151	MODULATOR RF WARNING
I152	MODULATOR RF WARNING
I153	MODULATOR RF WARNING
I401	BLOWN FUSE INDICATOR
TB2B2	F401 THRU F418
I416	
I417	POWER SUPPLY RF WARNING
I501	REC-TRANS RF WARNING
I502	REC-TRANS RF WARNING
I503	INDICATOR RF WARNING

RECEPTACLES

J402	SERVICING OUTLET POWER SUPPLY
J403	SERVICING OUTLET INDICATOR
J704	SERVICING OUTLET ANTENNA

RELAYS

K152	RADIATE
K401	RF DELAY TIMER
K402	MAIN ON-OFF CONTACTOR
K403	K401 SLAVE RELAY
K405	RADIATE INTERLOCKING
K501	CRYSTAL SHUTTER ACTUATOR
K701	ANTENNA REVERSING
K702	ANTENNA REVERSING
K705	TVM PROTECTIVE

INDUCTORS

L402	CR401 FILTER
L501	LO FILAMENT CHOKE

METERS

M401	AC LINE VOLTAGE
M402	OPERATING HOURS
M403	AC FREQUENCY

RESISTORS

R171	CURRENT LIMITING FOR 1151
R172	CURRENT LIMITING FOR 1153
R173	CURRENT LIMITING FOR 1153
R404	CR401 FILTER
R442	B401 CURRENT LIMITING
R444	BLOWN FUSE INDICATOR LOAD
R460	CURRENT LIMITING FOR 1417
R508	CURRENT LIMITING FOR 1501
R507	LO FILAMENT CURRENT LIMITING
R516	MAG. FILAMENT VOLTAGE DROPPING
R518	B502 CURRENT LIMITING
R519	B502 CURRENT LIMITING
R520	CURRENT LIMITING FOR B502
R530	ARC SUPPRESSOR
R830	CURRENT LIMITING FOR 1810

SWITCHES

S151	HIGH VOLTAGE GROUNDING
S153	INTERLOCK
S154	FOR B151
S155	FOR HR151 AND 152
S156	MAG. AGING VARIAC
S401	B753 ON-OFF
S402	INTERLOCK
S403	FOR HR401
S404	INTERLOCK
S501	REC-TRANS OVER TEMP
S503	B502 LIMIT
S504	INTERLOCK
S505	FOR HR501 AND 502
S508	B502 LIMIT
S601	MTI NORMAL
S602	SYSTEM ON-OFF
S610	FUSE B602
S611	FOR HR601
S612	INDICATOR SYNCHRO
S613	LO MOTOR TUNE
S615	RADIATE OFF
S616	RESET IN ON
S617	ANTENNA ROTATION
S618	ANTENNA ROTATION
S701	INTERLOCK
S708	FOR HR701
S709	FOR B701
S753	ANTENNA SAFETY
S-58	ANTENNA SYNCHRO
S2351	FOR HR2351
S2352	FOR B2350
S2354	MTI NORMAL
S2356	INTERLOCK

SURGE ELIMINATORS

TT501	LO FILAMENT

TRANSFORMERS

T101	FILAMENT
T151	HIGH VOLTAGE
T152	FILAMENT
T153	FILAMENT
T155	MAG. AGING VARIAC
T401	FILAMENT
T402	PLATE
T403	SYSTEM DC SUPPLY
T501	KEEP ALIVE
T502	FILAMENT
T504	MAGNETRON FIL
T504	CRT ANODE RV
T505	FILAMENT
T701	T701 & VTSE REFERENCE
T702	FILAMENT
T704	T701 & VTSE PLATE
T2350	FILAMENT

LINE FILTERS

Z151	MODULATOR
Z152	MODULATOR
Z153	MODULATOR
Z154	MODULATOR
Z155	MODULATOR
Z156	MODULATOR
Z157	MODULATOR
Z158	MODULATOR
Z159	MODULATOR
Z301	REC-TRANS
Z302	REC-TRANS
Z303	REC-TRANS
Z307	REC-TRANS
Z308	REC-TRANS
Z401	INDICATOR
Z402	INDICATOR
Z407	INDICATOR
Z2351	SIGNAL COMPARATOR

Figure 7–109. Primary Power and DC Control Circuits (Sheet 2 of 2)

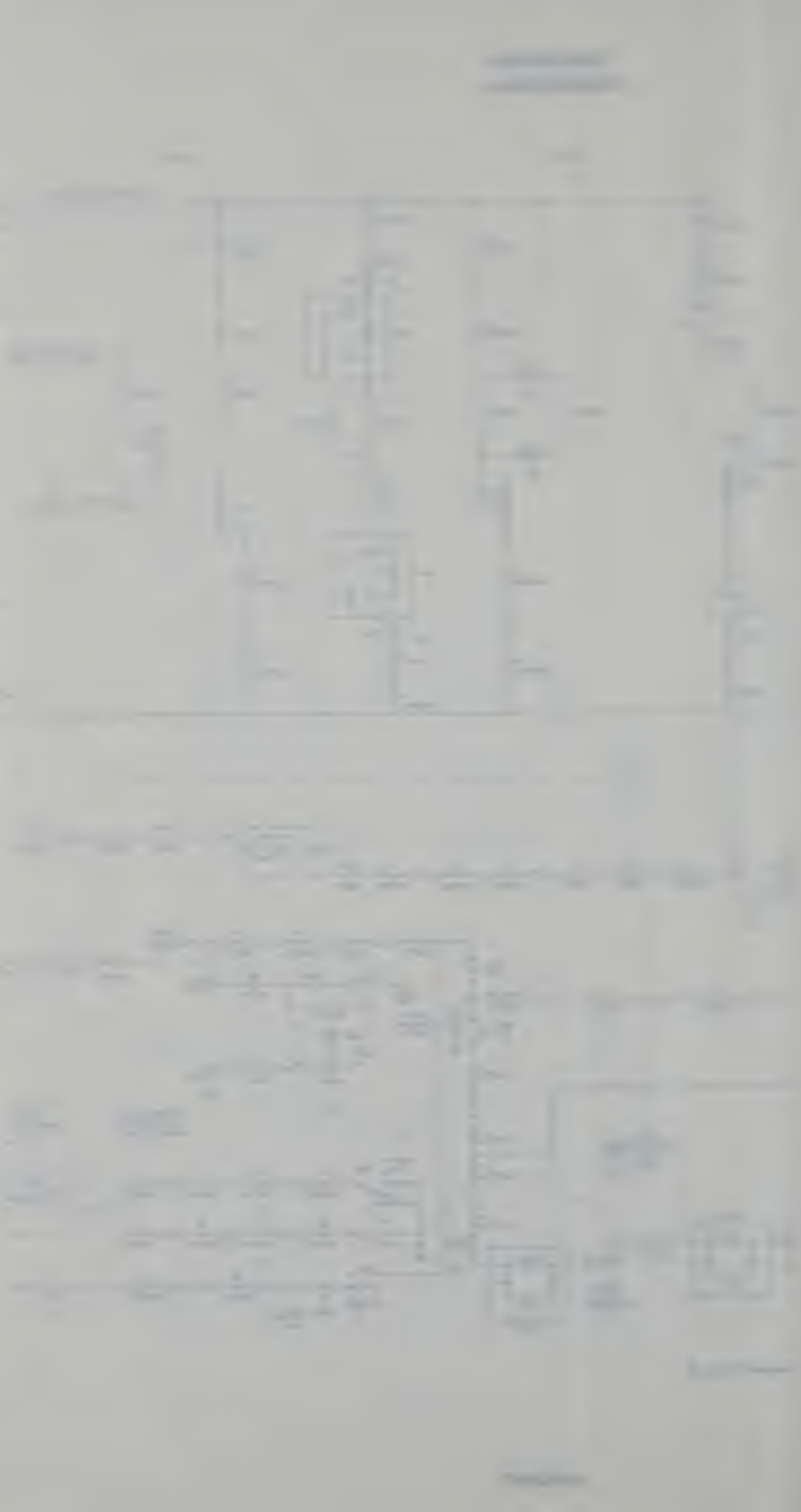

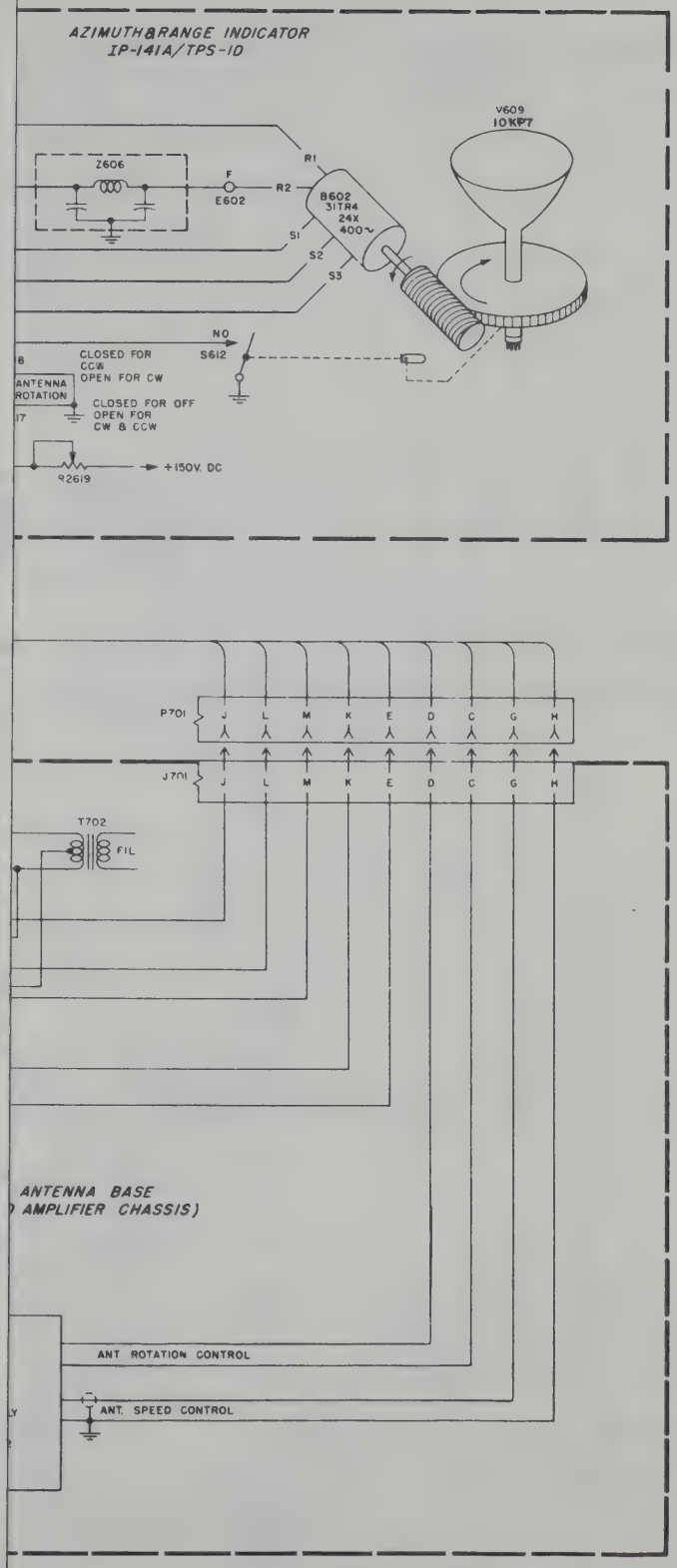

Figure 7—110. Synchro Diagram

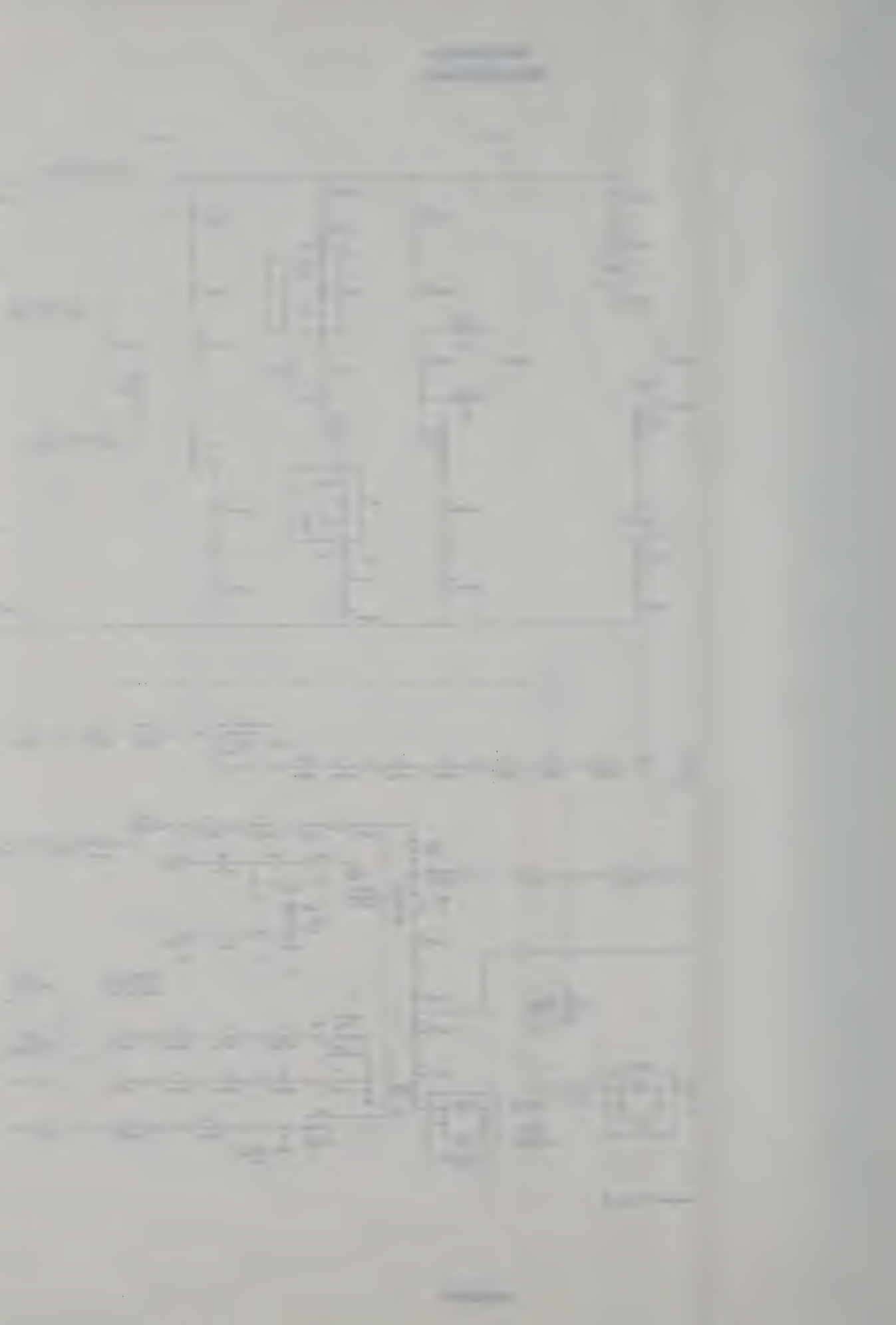

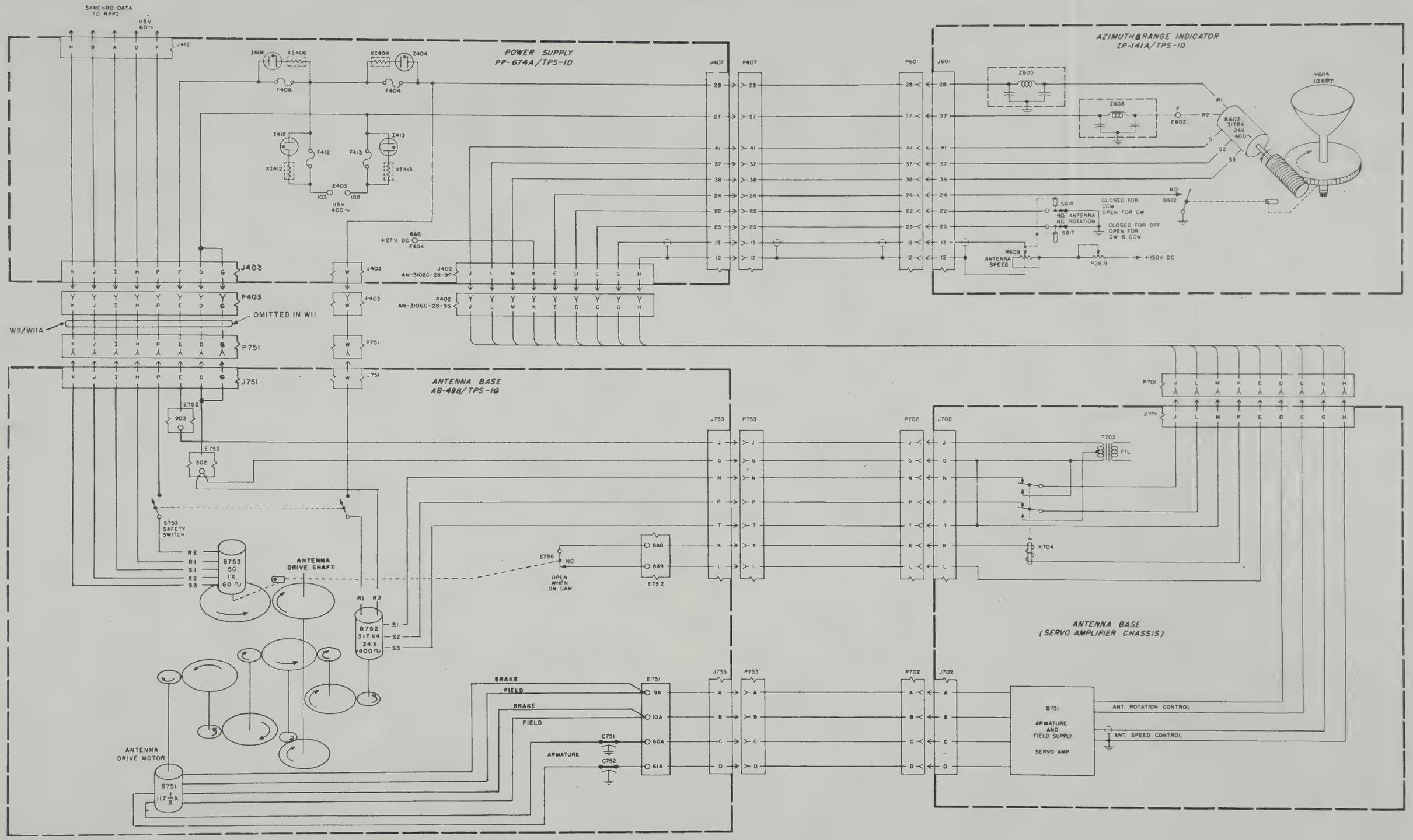

Figure 7—110. Synchro Diagram

J151
AN-3102C-32-13P

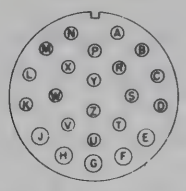

FACE VIEW OF PIN INSERT
AS VIEWED FROM ENGAGING END

18 ● 16 CONDUCTORS
5 ● 12 CONDUCTORS

LSE OUTPUT
TRANSMITTER

100 VOLT PULSE

UNLESS OTHERWISE NOTED:

1. THE VALUE OF CAPACITORS IS EXPRESSED IN MICRO-MICROFARADS WHEN REPRESENTED BY WHOLE NUMBERS AND IS EXPRESSED IN MICROFARADS WHEN REPRESENTED BY DECIMALS
2. RESISTOR WATTAGE RATINGS ARE 1/2 WATT UNLESS OTHERWISE NOTED.

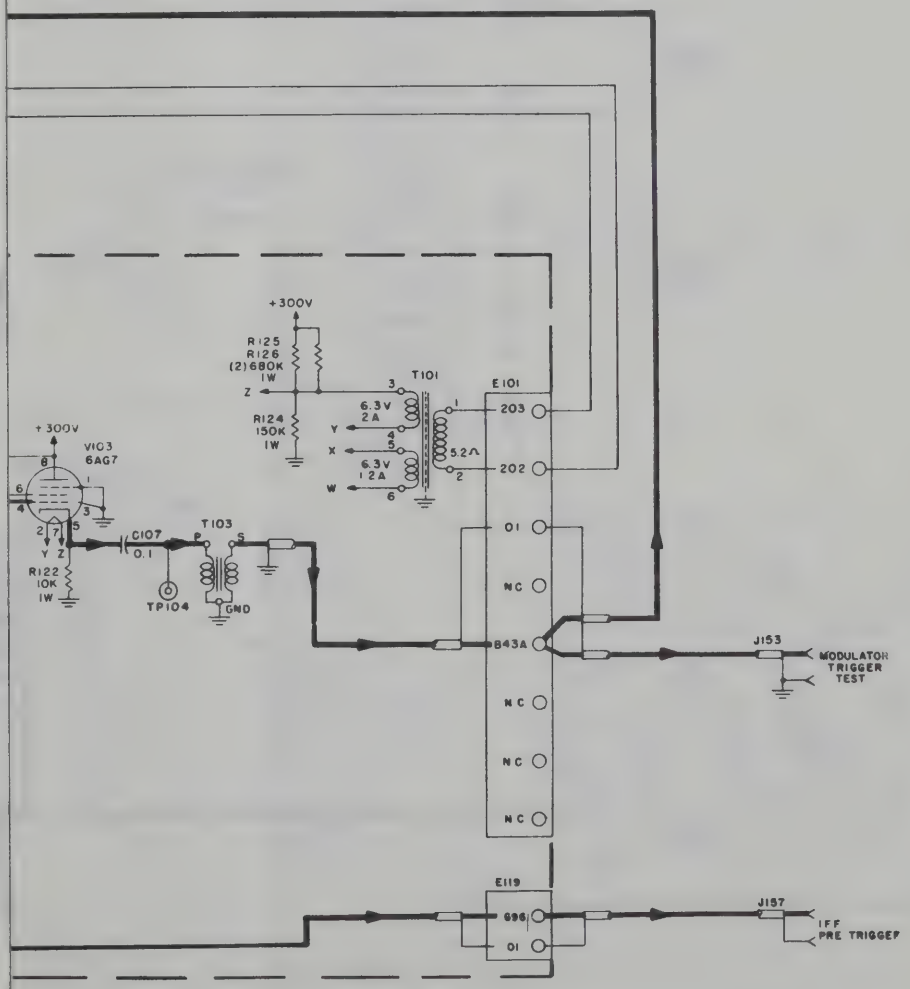

Figure 7—111. Radar Modulator Schematic

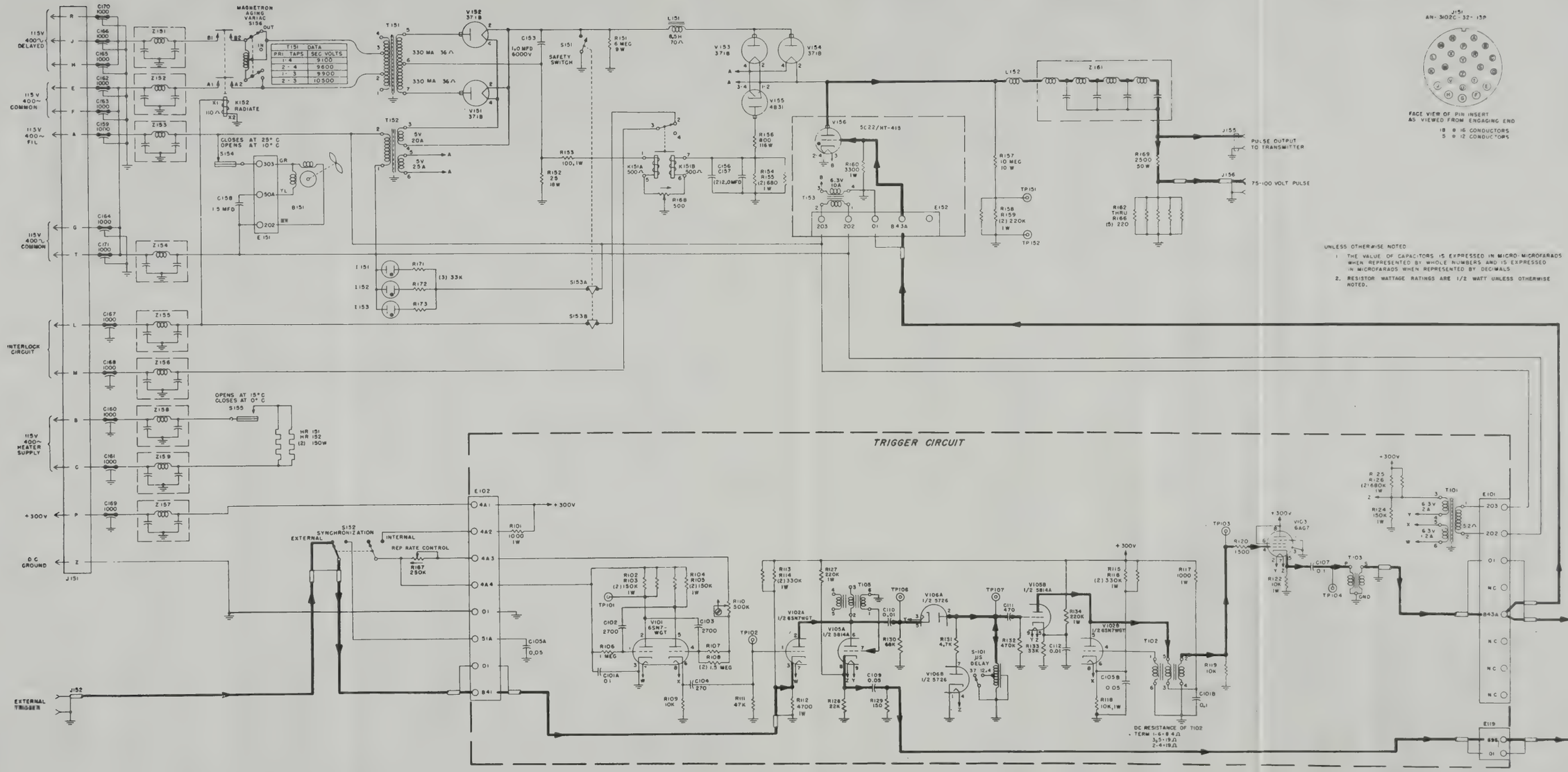
TRIGGER CIRCUIT
T151 DATA
PRI TAPS | SEC VOLTS
1-4 | 9100
2-4 | 9600
1-3 | 9900
2-3 | 10300
FACE VIEW OF PIN INSERT AS VIEWED FROM ENGAGING END
18 @ 16 CONDUCTORS
5 @ 12 CONDUCTORS
UNLESS OTHERWISE NOTED
1. THE VALUE OF CAPACITORS IS EXPRESSED IN MICRO-MICROFARADS WHEN REPRESENTED BY WHOLE NUMBERS AND IS EXPRESSED IN MICROFARADS WHEN REPRESENTED BY DECIMALS
2. RESISTOR WATTAGE RATINGS ARE 1/2 WATT UNLESS OTHERWISE NOTED.
DC RESISTANCE OF T102
TERM 1-6=8.4Ω
3-5=19.2Ω
2-4=19.2Ω

Figure 7—111. Radar Modulator Schematic

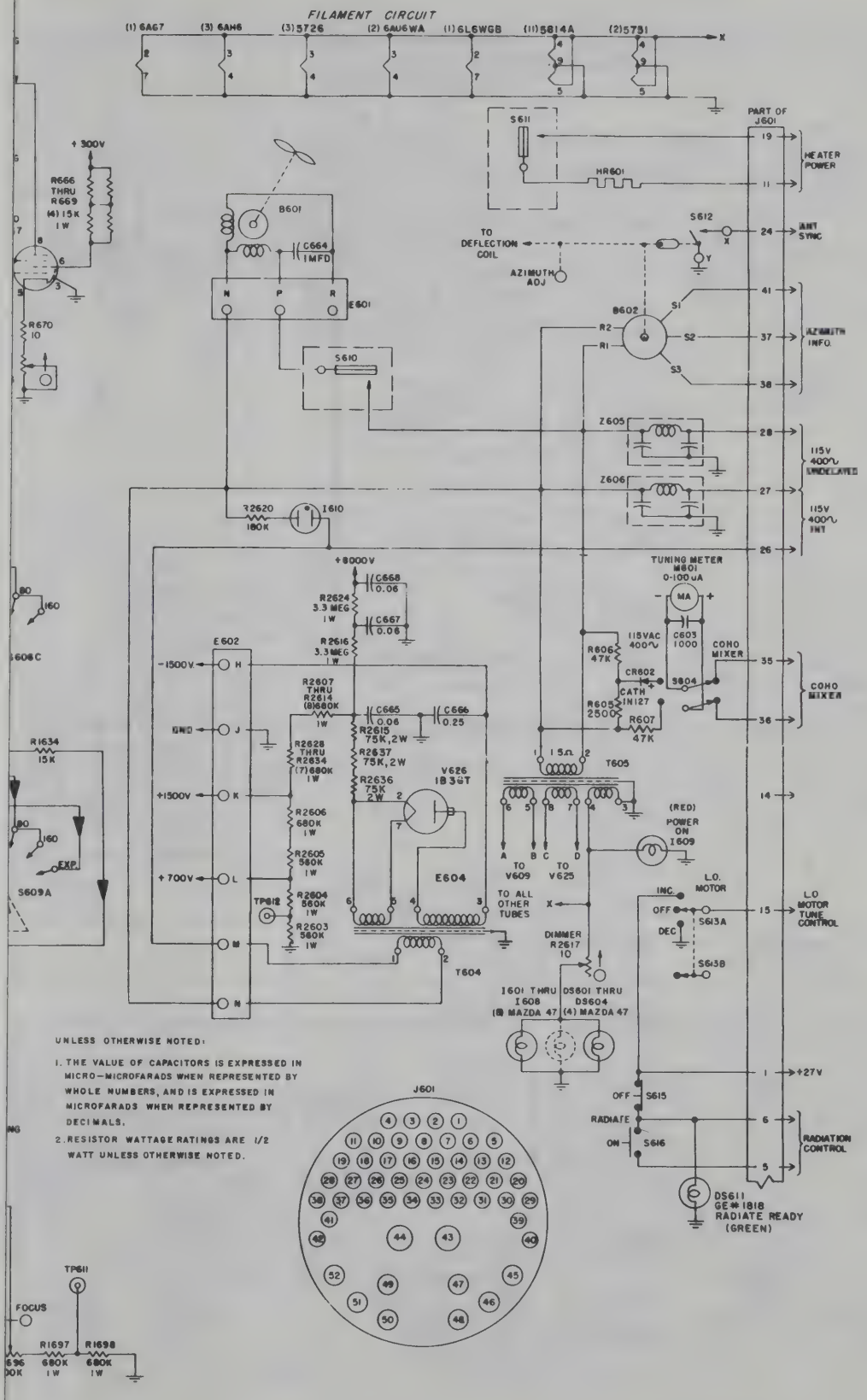

Figure 7—112. Azimuth and Range Indicator Schematic

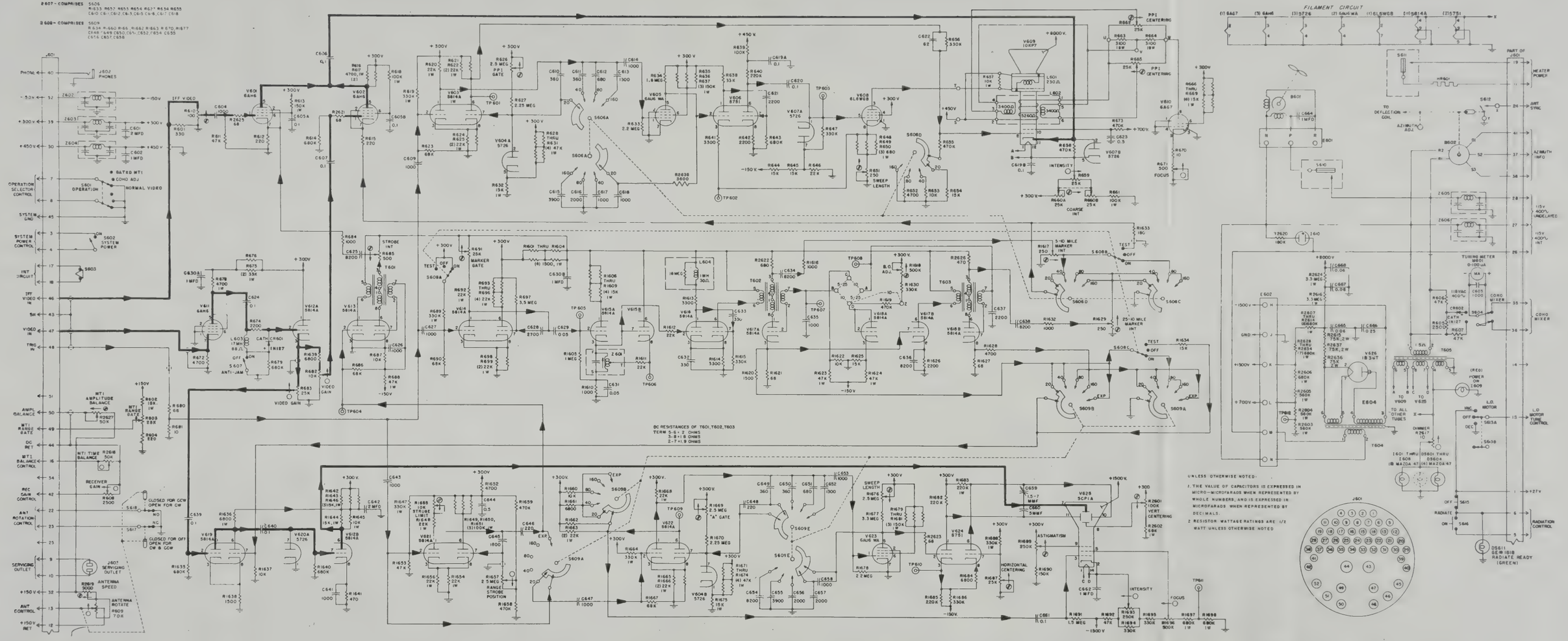
2607 - COMPRISES S606 R633 R652 R653 R654 R627 R634 R635 C640 C581 C582 C583 C585 C586 C587 C588
3608 - COMPRISES S609 R634 R660 R665 R666 R662 R663 R670 R677 C646 C649 C650 C654 C652 C654 C655 C616 C657 C658
J601
J602 PHONES
Z602
Z603
Z604
C601 2 MFD
C602 1 MFD
+150V
+300V
+450V
IFF VIDEO
S601 OPERATION
GATED MTI
ECHO ADJ
NORMAL VIDEO
S602 SYSTEM POWER
S603
OPERATION SELECTOR CONTROL
SYSTEM GND
SYSTEM POWER CONTROL
INT CIRCUIT
IFF VIDEO IN
SH
VIDEO IN
TRIG IN
AMPL BALANCE
MTI RANGE GATE
DC RET
MTI BALANCE CONTROL
REC GAIN CONTROL
ANT ROTATION CONTROL
SERVICING OUTLET
ANT CONTROL
+150V RET
MTI AMPLITUDE BALANCE R2627 50K
MTI RANGE GATE R2604 250
MTI TIME BALANCE R2618 50K
RECEIVER GAIN R608 2500
CLOSED FOR CCW OPEN FOR CW
CLOSED FOR OFF OPEN FOR CW & CCW
J607 SERVICING OUTLET
ANTENNA SPEED R2619 3000
ANTENNA ROTATE R609 70K
V601 6AH6
V602 6AH6
V603 5814A
V604 A 5726
V605 6AU6 WA
V606 6SN7 GTB
V607 A 5726
V608 6LW8B
V609 10KP7
V610 6AG7
V611 6AH6
V612 A 5814A
V613 5814A
V614 5814A
V615 A 5814A
V615 B 5814A
V616 5814A
V617 A 5814A
V617 B 5814A
V618 5814A
V619 5814A
V620 A 5726
V621 5814A
V622 5814A
V623 6AU6 WA
V624 6T8
V625 5CP1A
V626 1B34T
V627 B 5726
V628 5814A
V629 6AL5
V630 6AL5
V631 6AL5
V632 6AL5
V633 6AL5
V634 6AL5
V635 6AL5
V636 6AL5
V637 6AL5
V638 6AL5
V639 6AL5
V640 6AL5
V641 6AL5
V642 6AL5
V643 6AL5
V644 6AL5
V645 6AL5
V646 6AL5
V647 6AL5
V648 6AL5

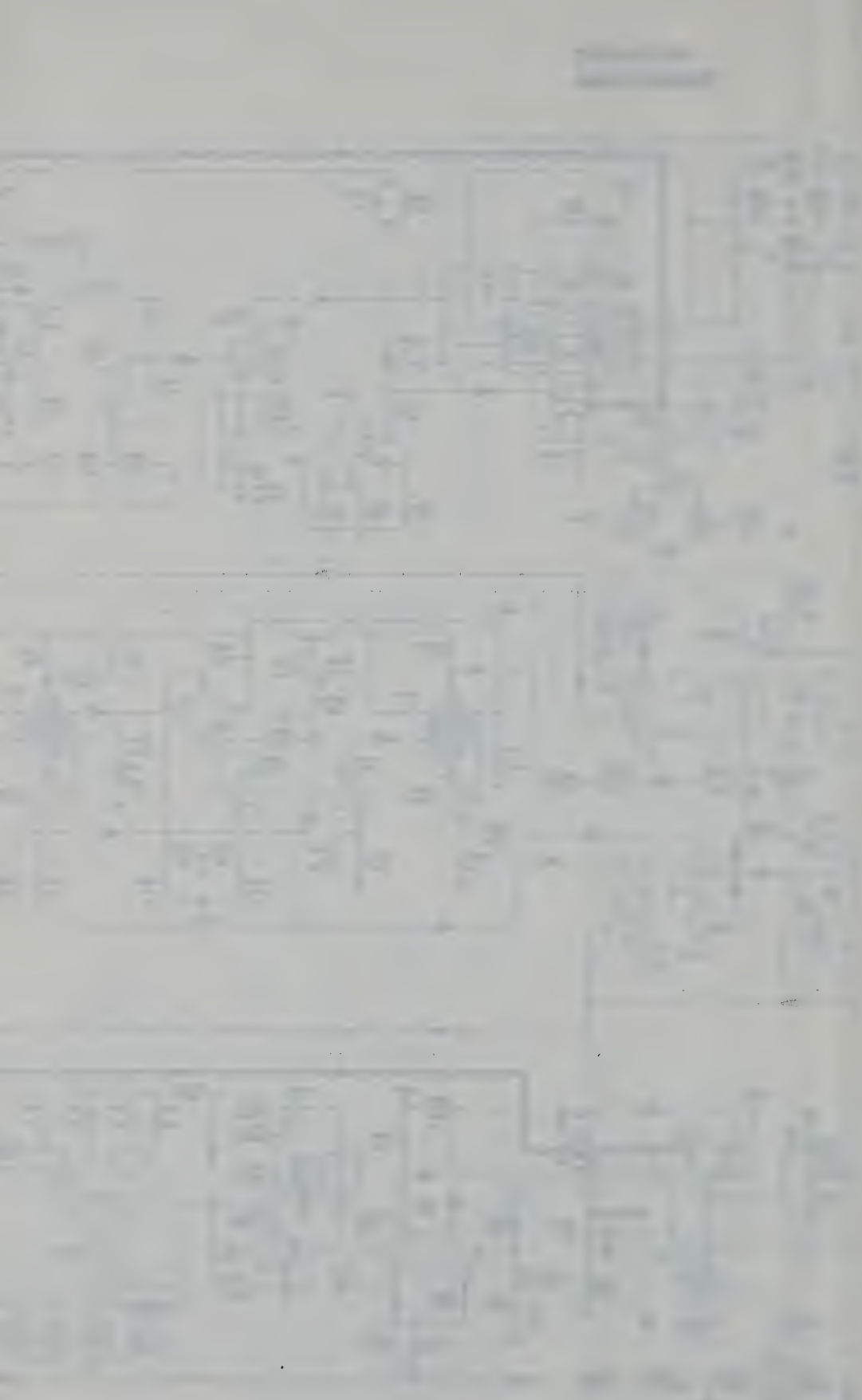

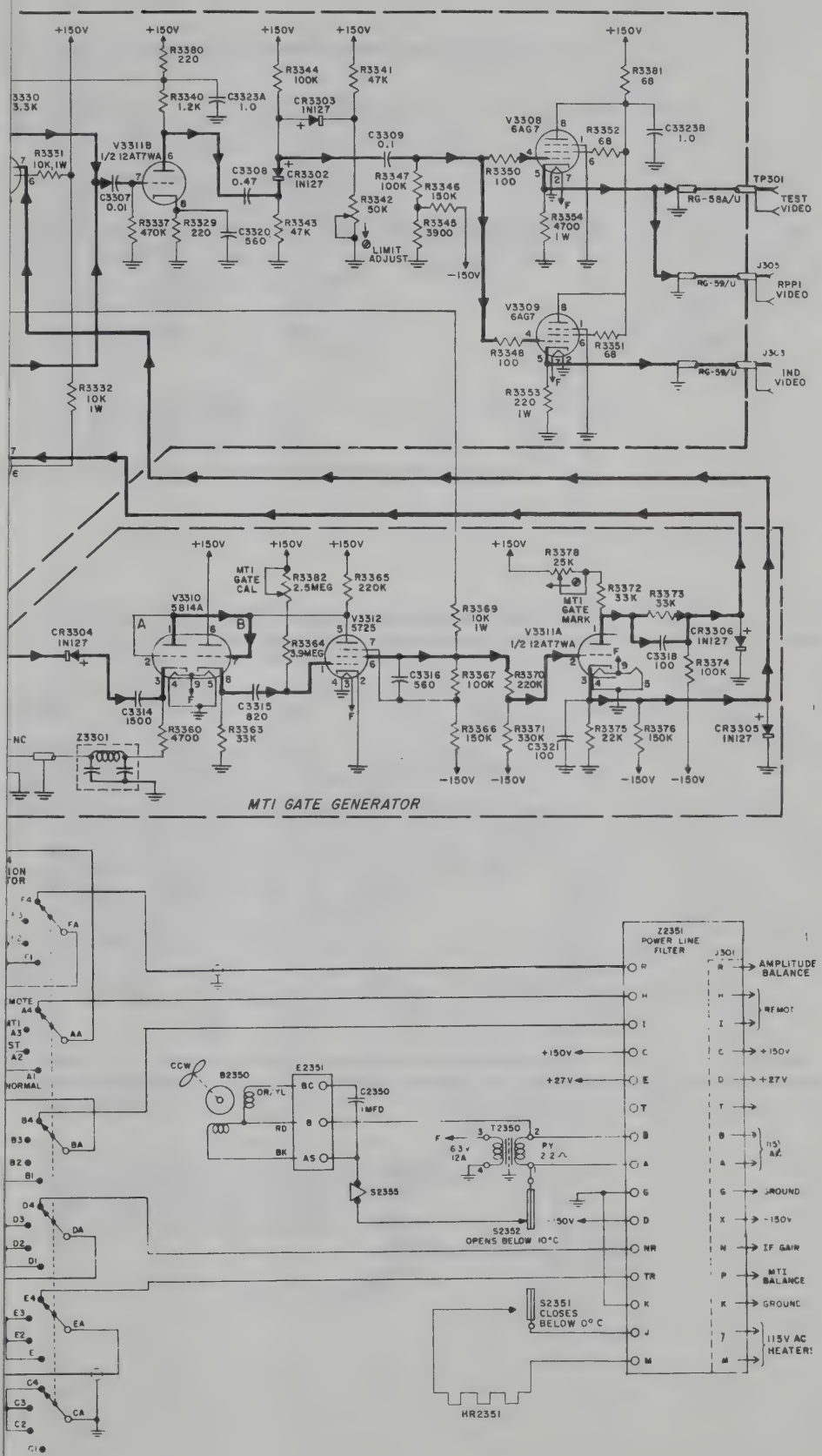

Figure 7—113. Signal Comparator Schematic (Sheet 1 of 2)

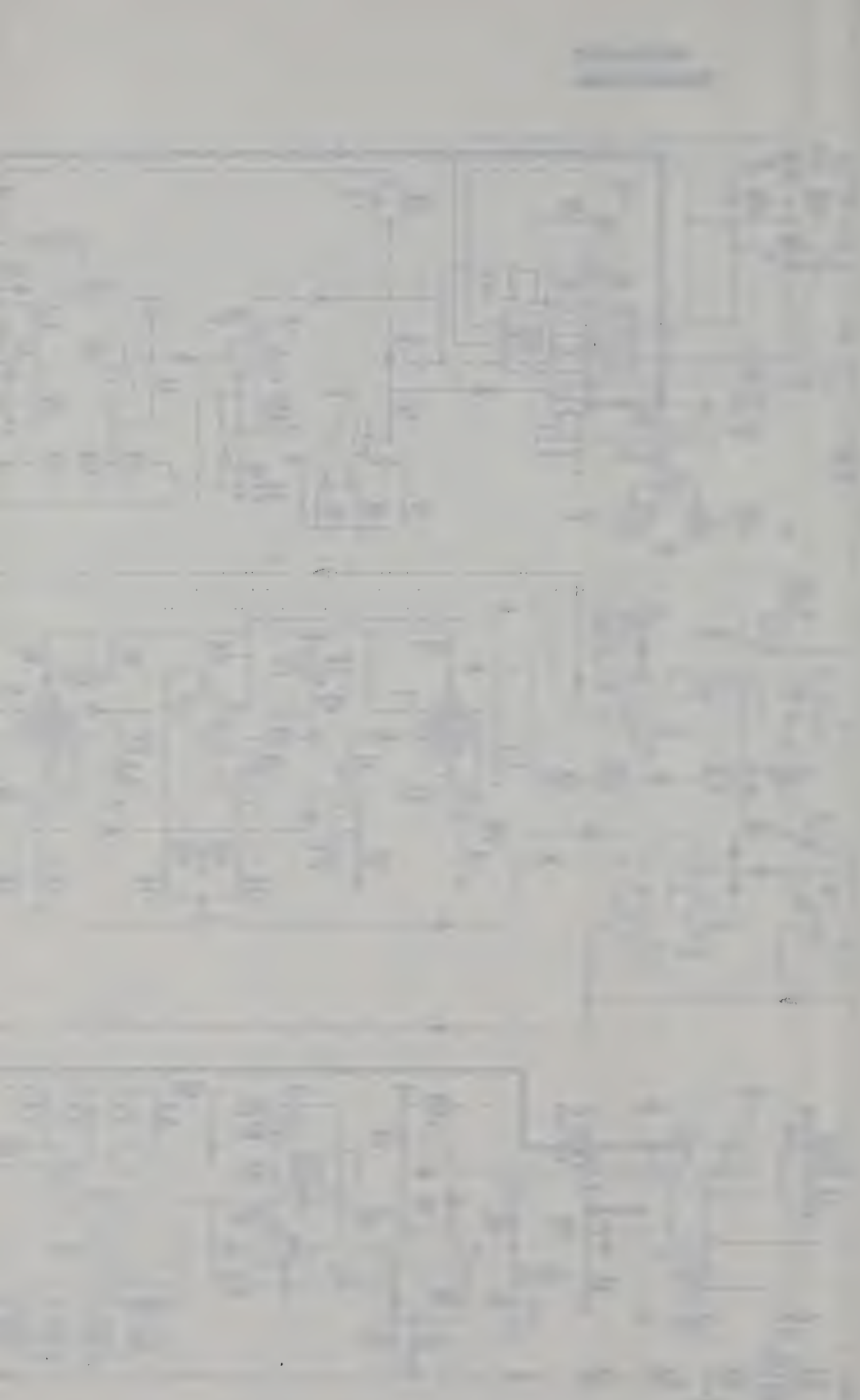

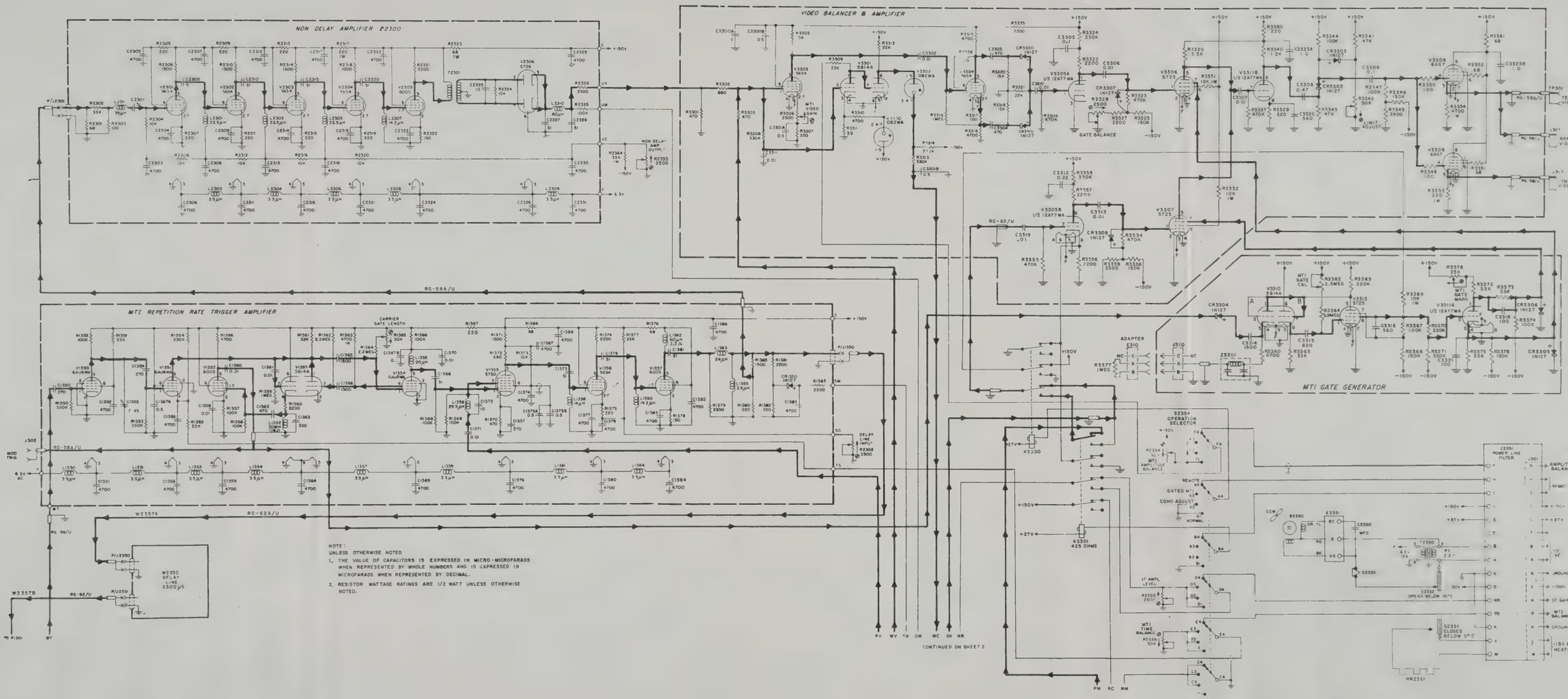

Figure 7–113. Signal Comparator Schematic (Sheet 1 of 2)

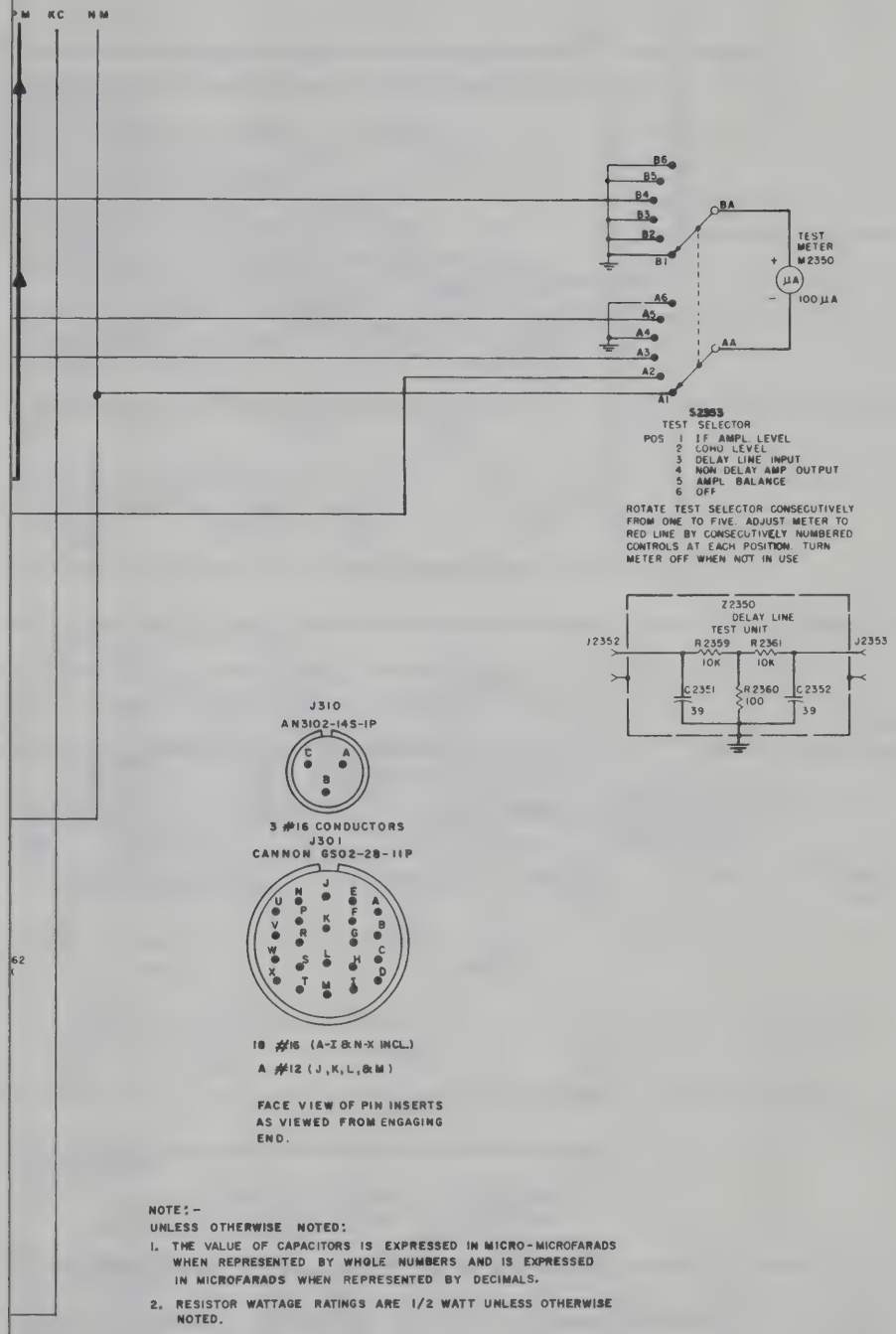

NOTE:-
UNLESS OTHERWISE NOTED:

1. THE VALUE OF CAPACITORS IS EXPRESSED IN MICRO-MICROFARADS WHEN REPRESENTED BY WHOLE NUMBERS AND IS EXPRESSED IN MICROFARADS WHEN REPRESENTED BY DECIMALS.
2. RESISTOR WATTAGE RATINGS ARE 1/2 WATT UNLESS OTHERWISE NOTED.

Figure 7—113. Signal Comparator Schematic (Sheet 2 of 2)

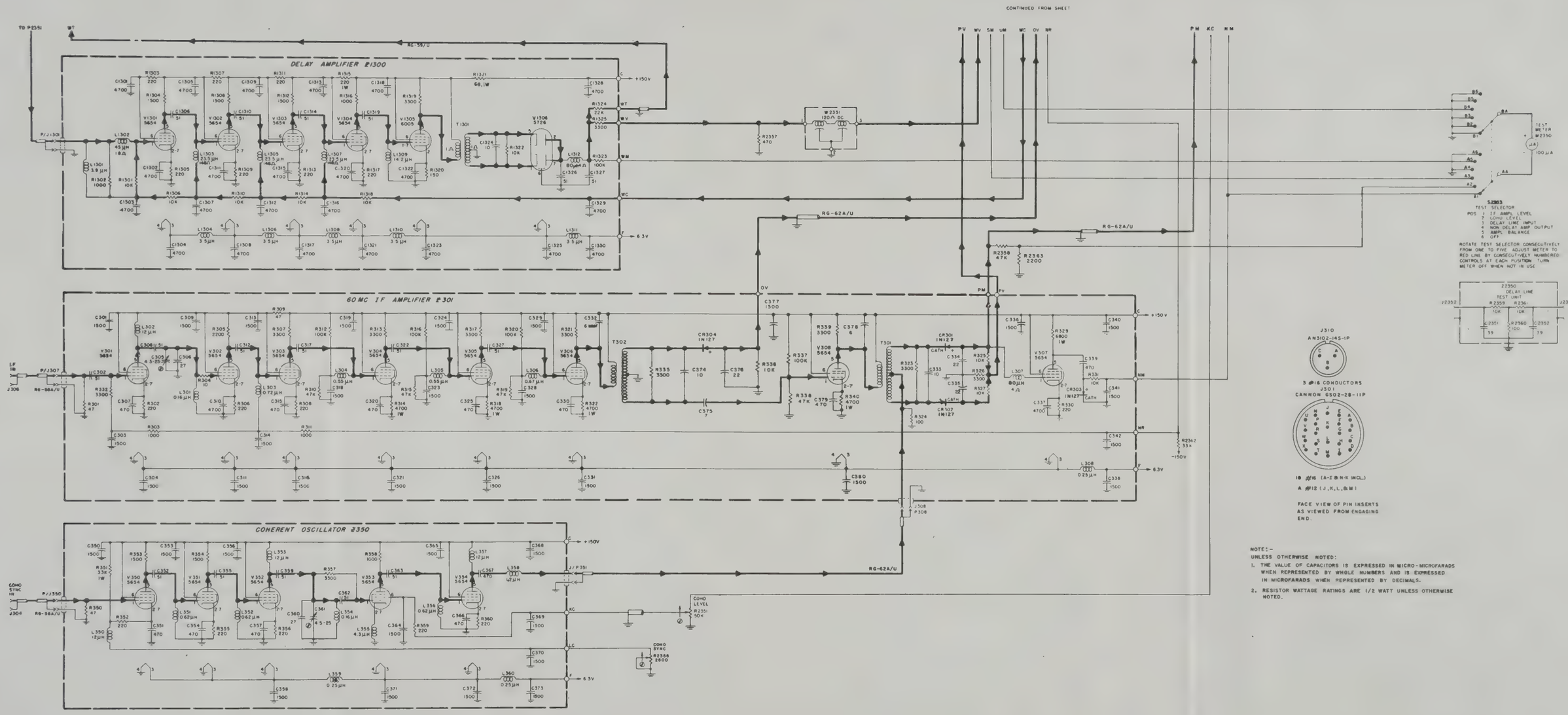
DELAY AMPLIFIER A1300
60 MC IF AMPLIFIER A1301
COHERENT OSCILLATOR A1350
CONTINUED FROM SHEET
TO P2351
RG-59/U
RG-62A/U
RG-88A/U
+150V
+6.3V
-150V
TEST METER M2350
S2363
TEST SELECTOR
POS 1 IF AMPL LEVEL
2 COHO LEVEL
3 DELAY LINE INPUT
4 NON-DELAY AMP OUTPUT
5 AMPL BALANCE
6 OFF
ROTATE TEST SELECTOR CONSECUTIVELY FROM ONE TO FIVE ADJUST METER TO RED LINE BY CONSECUTIVELY NUMBERED CONTROLS AT EACH PUSITION TURN METER OFF WHEN NOT IN USE
A2350
DELAY LINE TEST UNIT
J2310
AN3102-14S-1P
3 #16 CONDUCTORS
J301
CANNON 6S02-28-11P
18 #16 (A-I & N-X INCL.)
A #12 (J,K,L,& M)
FACE VIEW OF PIN INSERTS AS VIEWED FROM ENGAGING END.
NOTE:-
UNLESS OTHERWISE NOTED:
1. THE VALUE OF CAPACITORS IS EXPRESSED IN MICRO-MICROFARADS WHEN REPRESENTED BY WHOLE NUMBERS AND IS EXPRESSED IN MICROFARADS WHEN REPRESENTED BY DECIMALS.
2. RESISTOR WATTAGE RATINGS ARE 1/2 WATT UNLESS OTHERWISE NOTED.

Figure 7—113. Signal Comparator Schematic (Sheet 2 of 2)

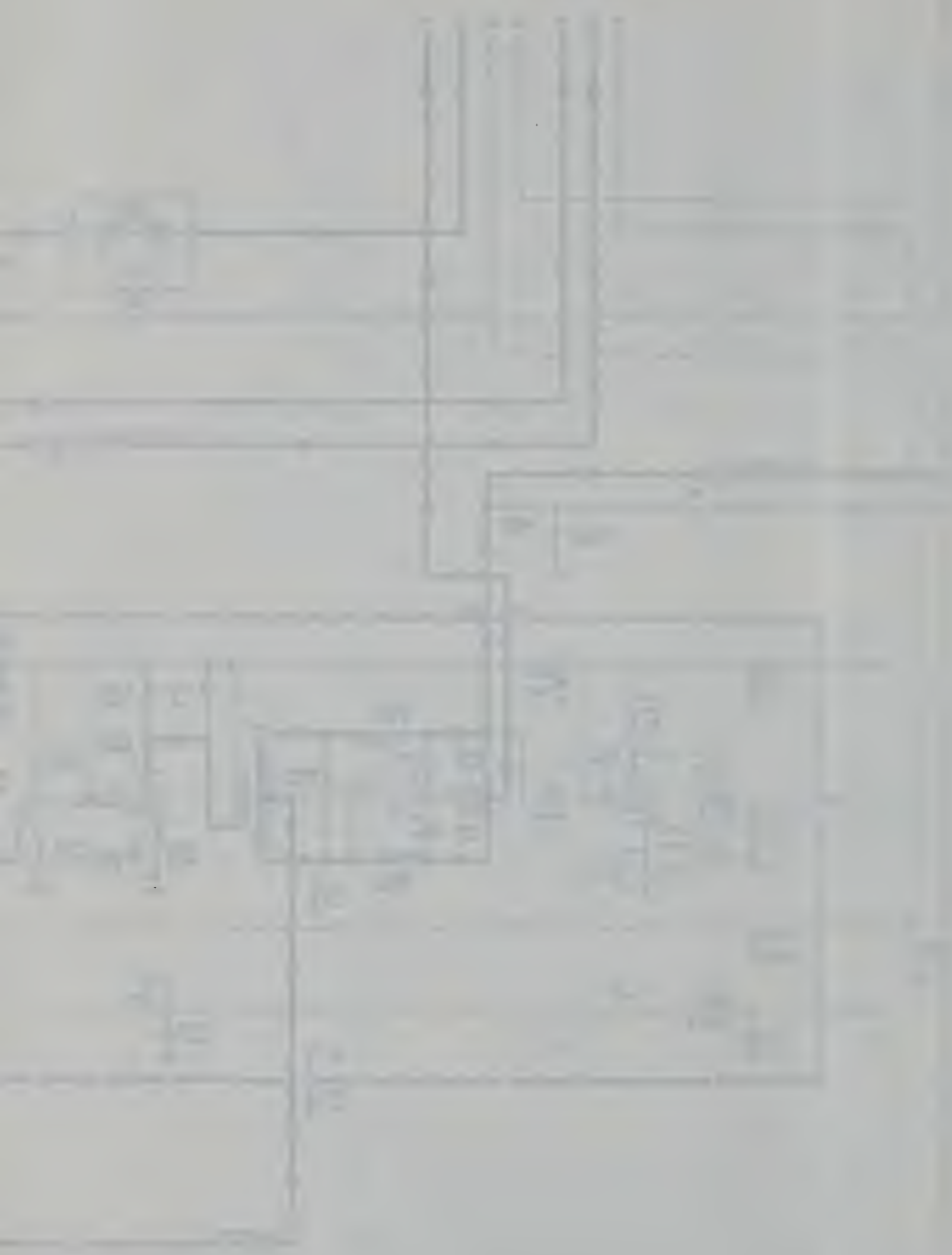

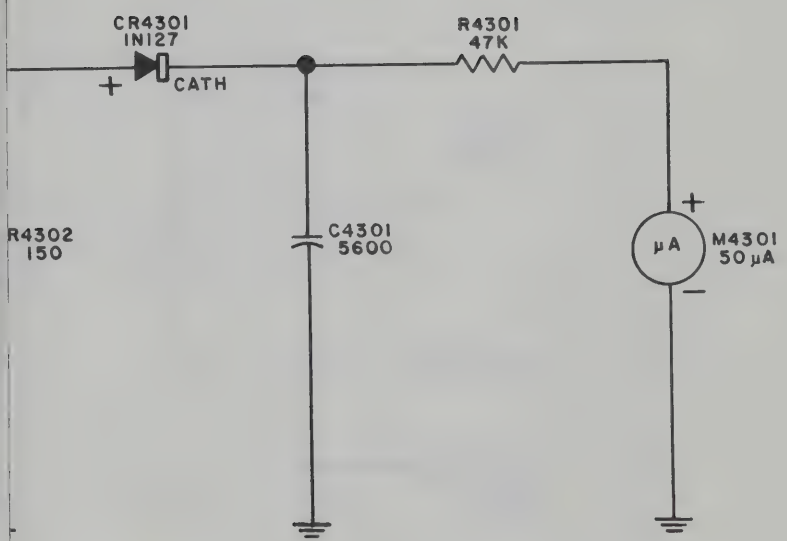

Figure 7—114. Signal Comparator Test Set Schematic

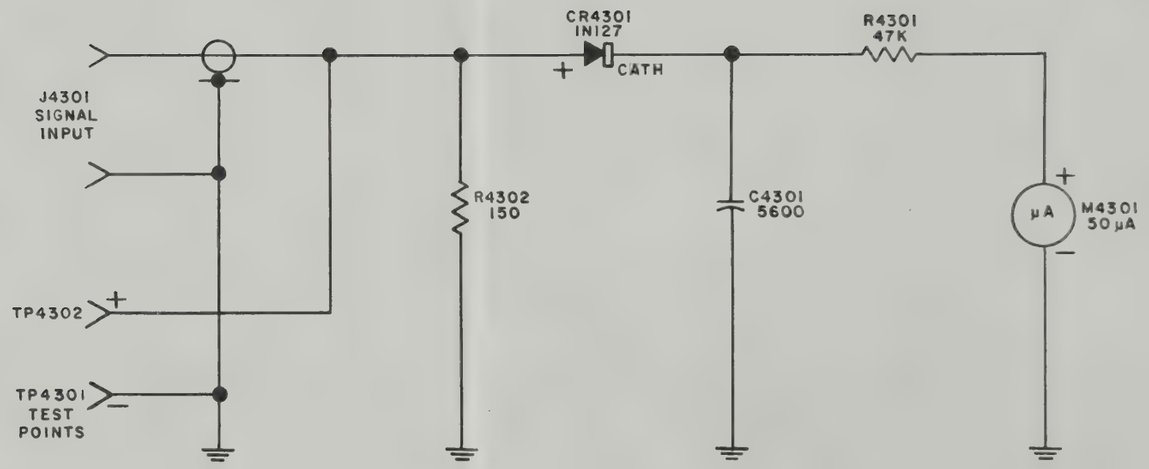

Figure 7—114. Signal Comparator Test Set Schematic

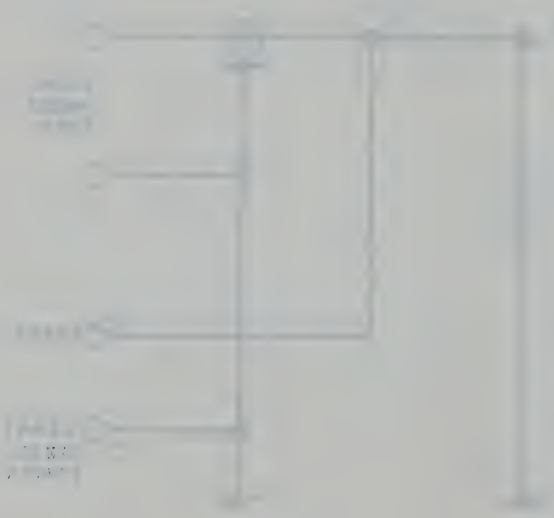

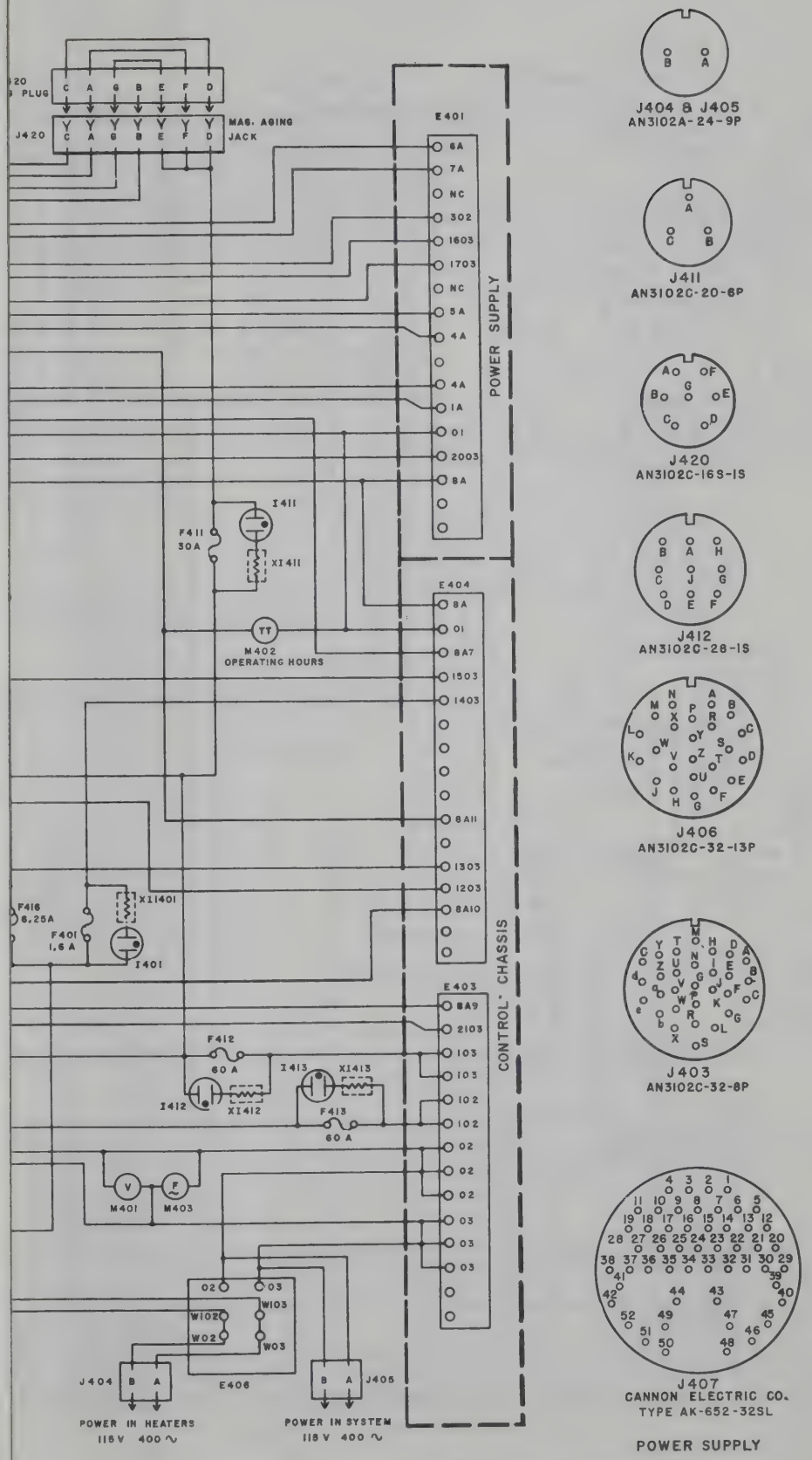

Figure 7—115. Power Supply Schematic (Sheet 1 of 2)

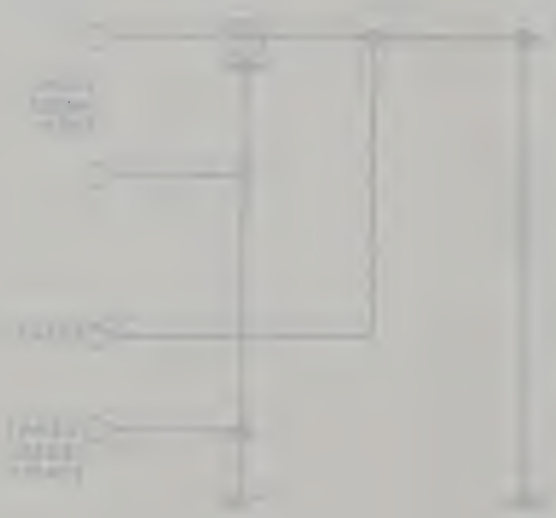

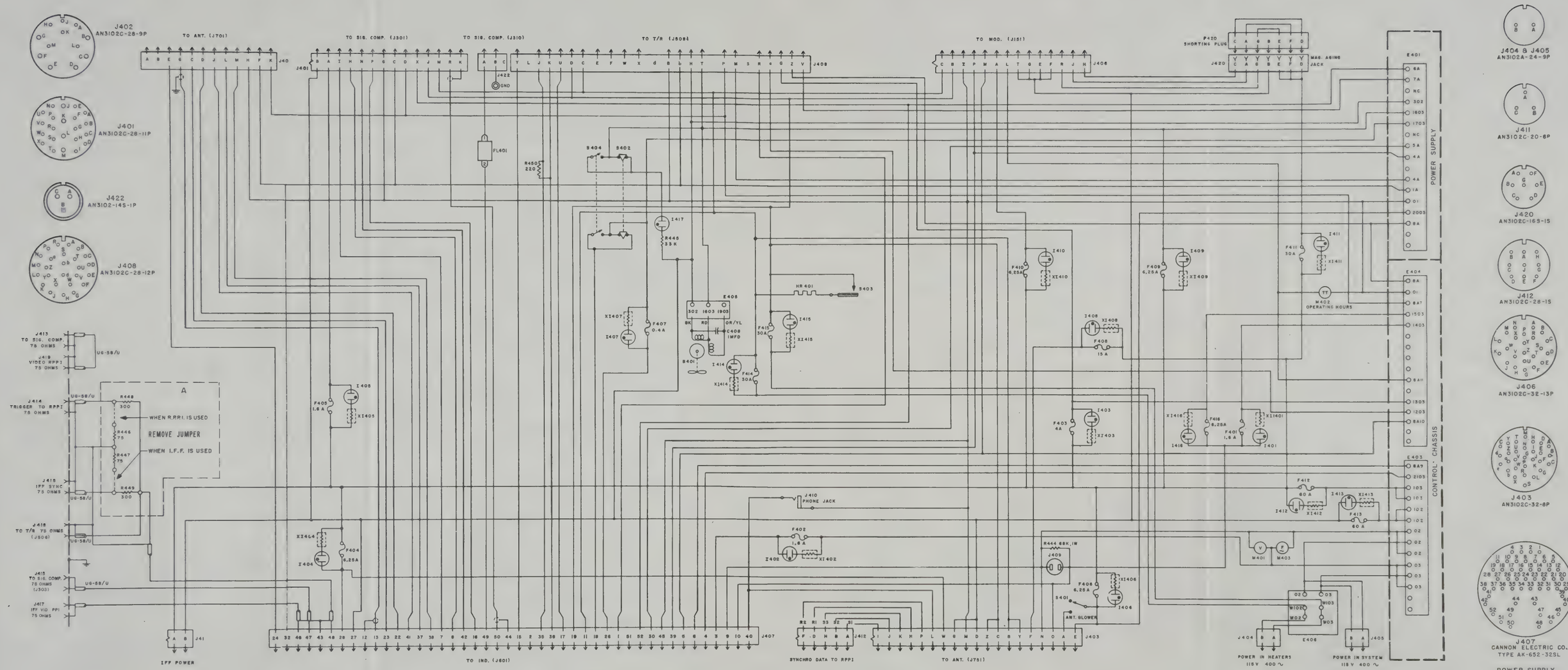

Figure 7—115. Power Supply Schematic (Sheet 1 of 2)

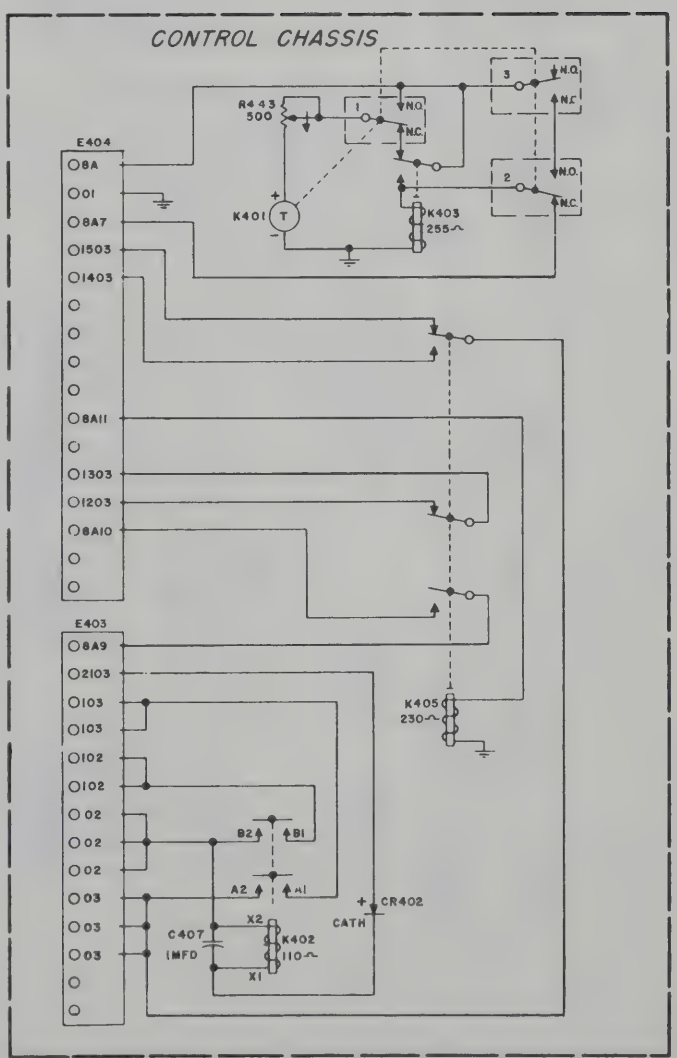

Figure 7—115. Power Supply Schematic (Sheet 2 of 2)

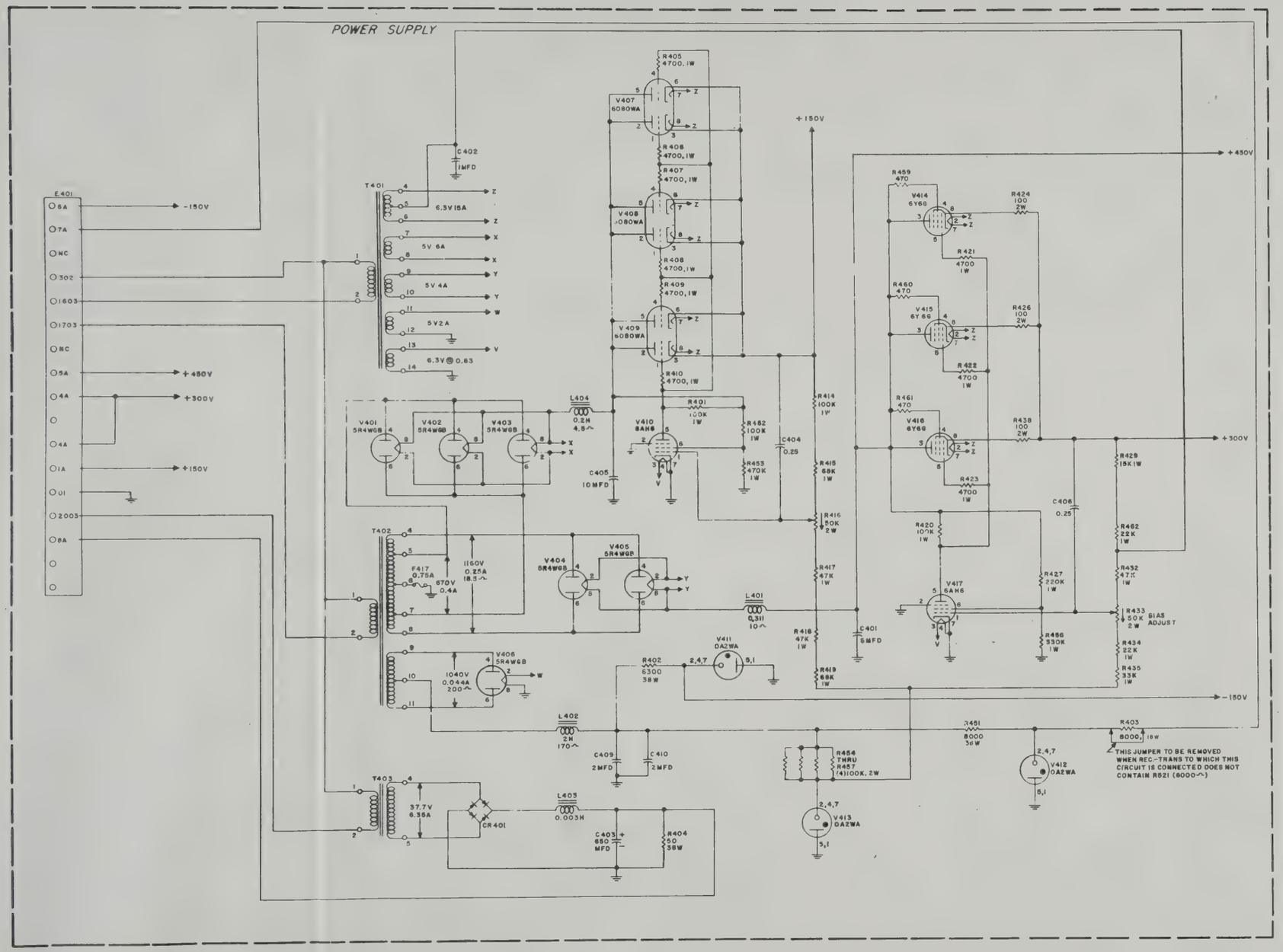

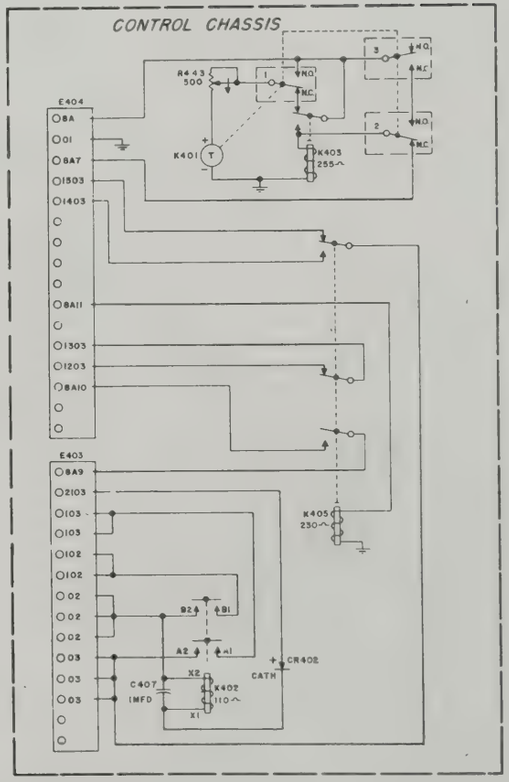

Figure 7–115. Power Supply Schematic (Sheet 2 of 2)

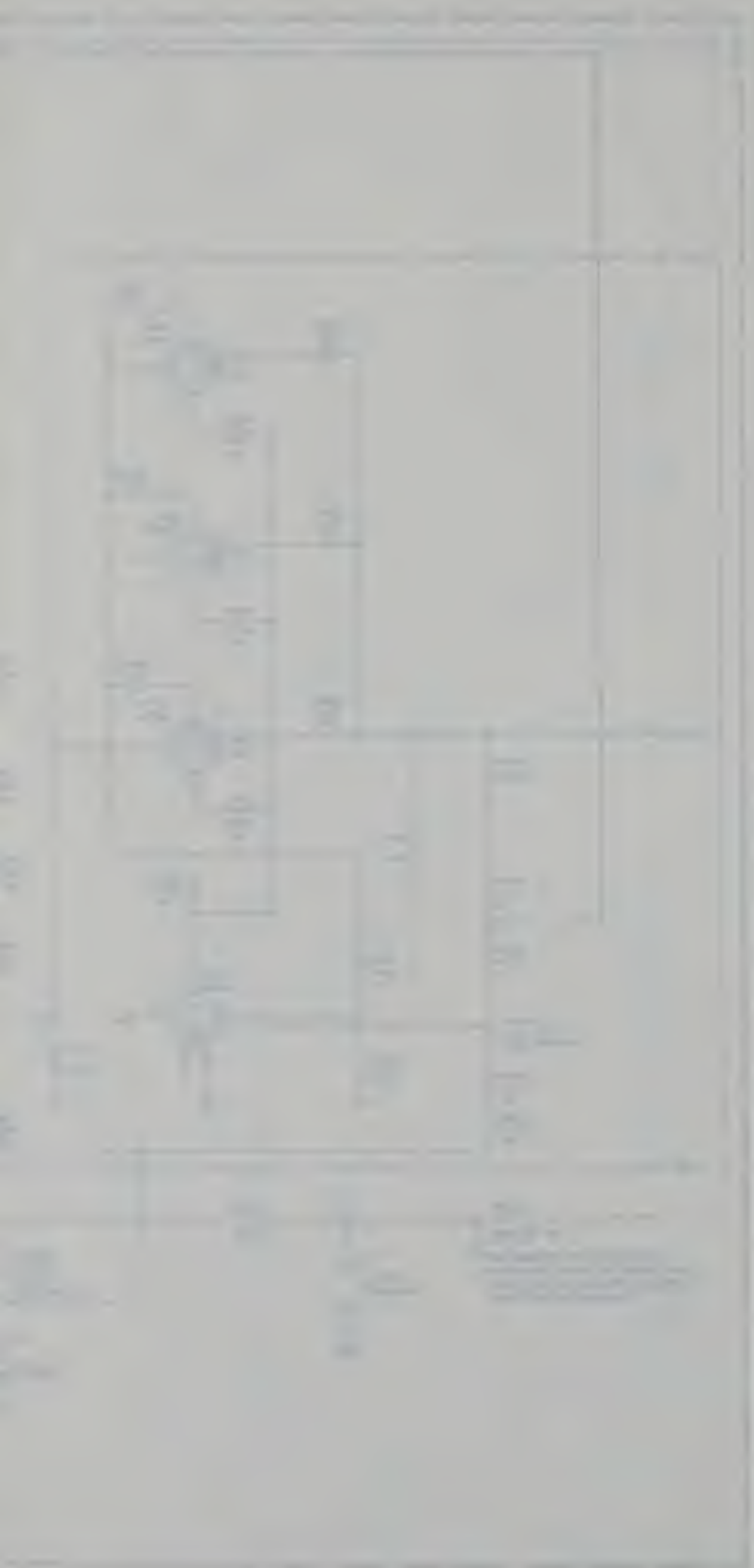

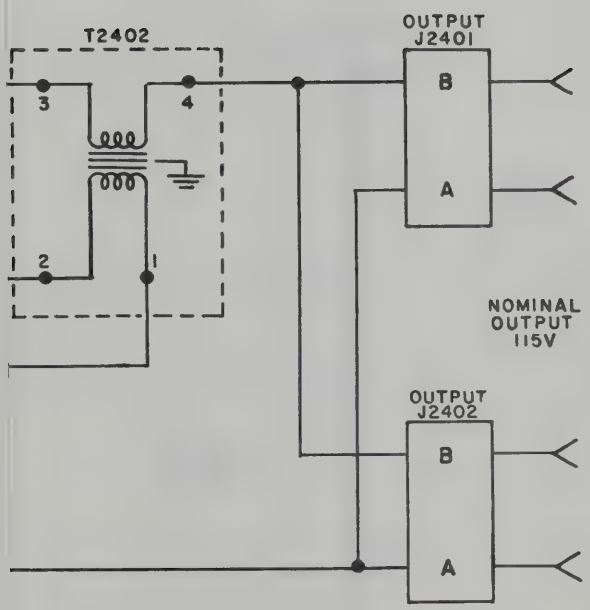

e 7—116. Variable Power Transformer Schematic

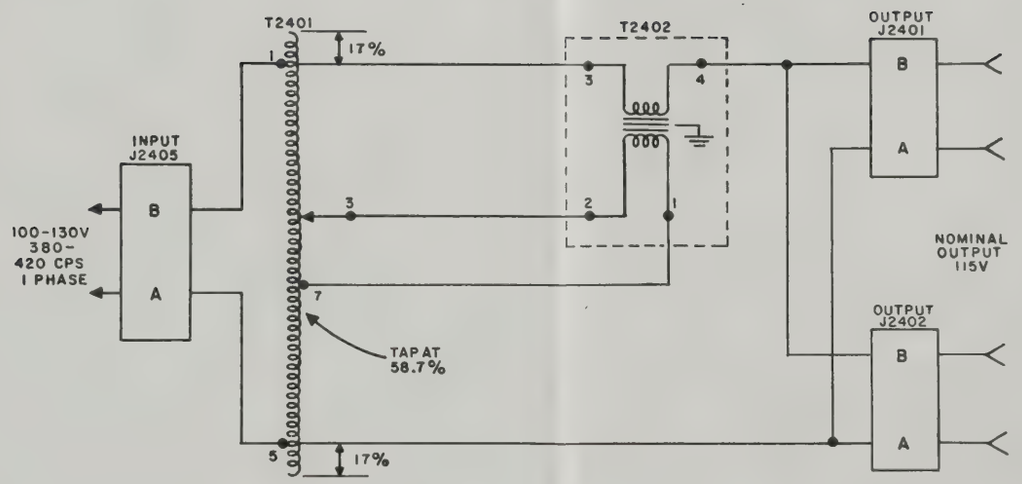

Figure 7—116. Variable Power Transformer Schematic

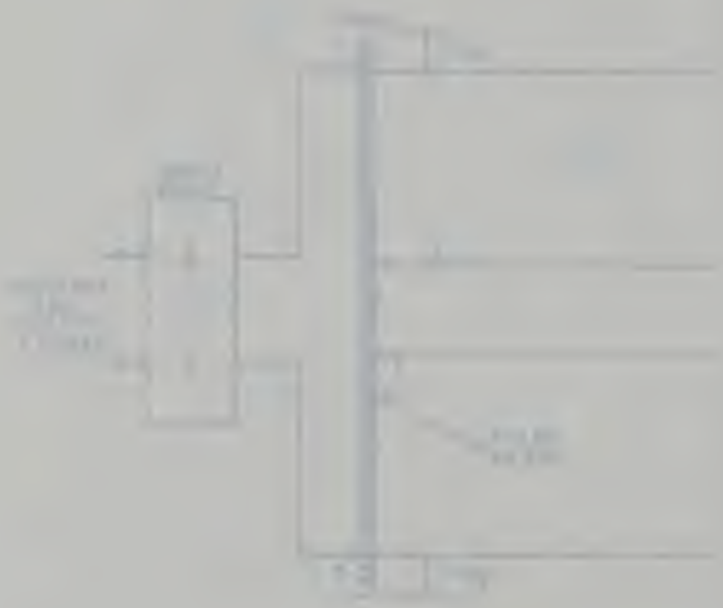

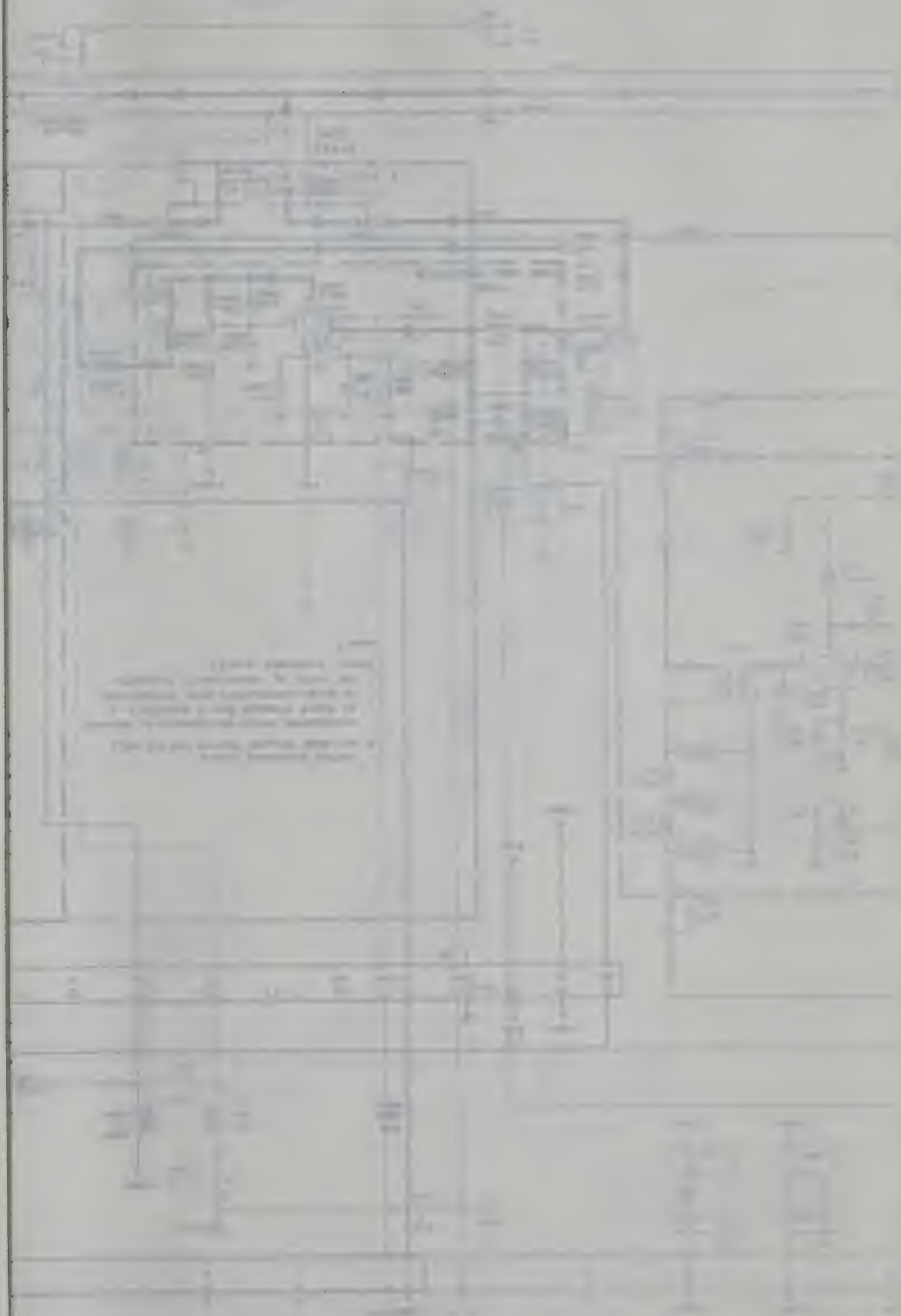

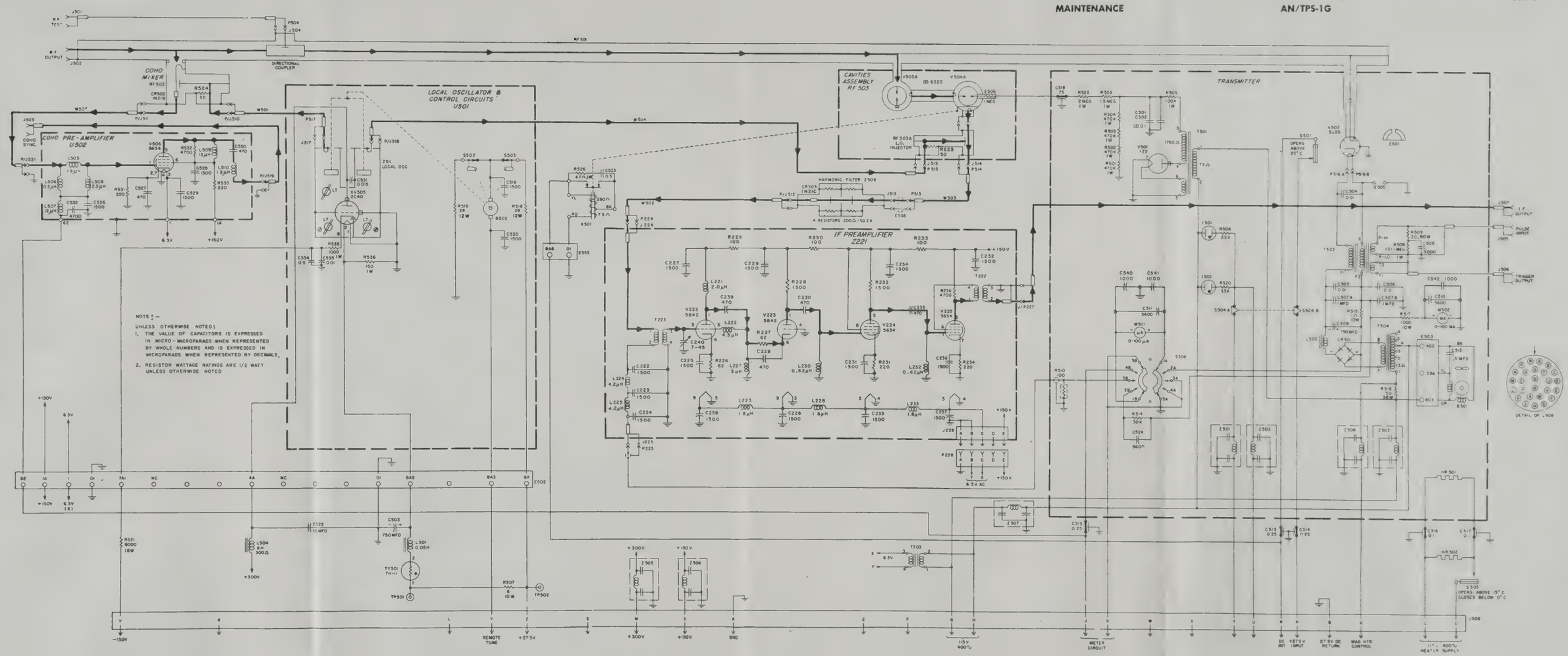
COHO MIXER RF 502
COHO PRE-AMPLIFIER U502
LOCAL OSCILLATOR & CONTROL CIRCUITS U501
CAVITIES ASSEMBLY RF 503
IF PREAMPLIFIER 2221
TRANSMITTER
DIRECTIONAL COUPLER
HARMONIC FILTER Z509
NOTE ± —
UNLESS OTHERWISE NOTED:
1, THE VALUE OF CAPACITORS IS EXPRESSED IN MICRO-MICROFARADS WHEN REPRESENTED BY WHOLE NUMBERS AND IS EXPRESSED IN MICROFARADS WHEN REPRESENTED BY DECIMALS.
2, RESISTOR WATTAGE RATINGS ARE 1/2 WATT UNLESS OTHERWISE NOTED
REMOTE TUNE
METER CIRCUIT
DETAIL OF J508

Figure 7—117. Radar Receiver-Transmitter Schematic

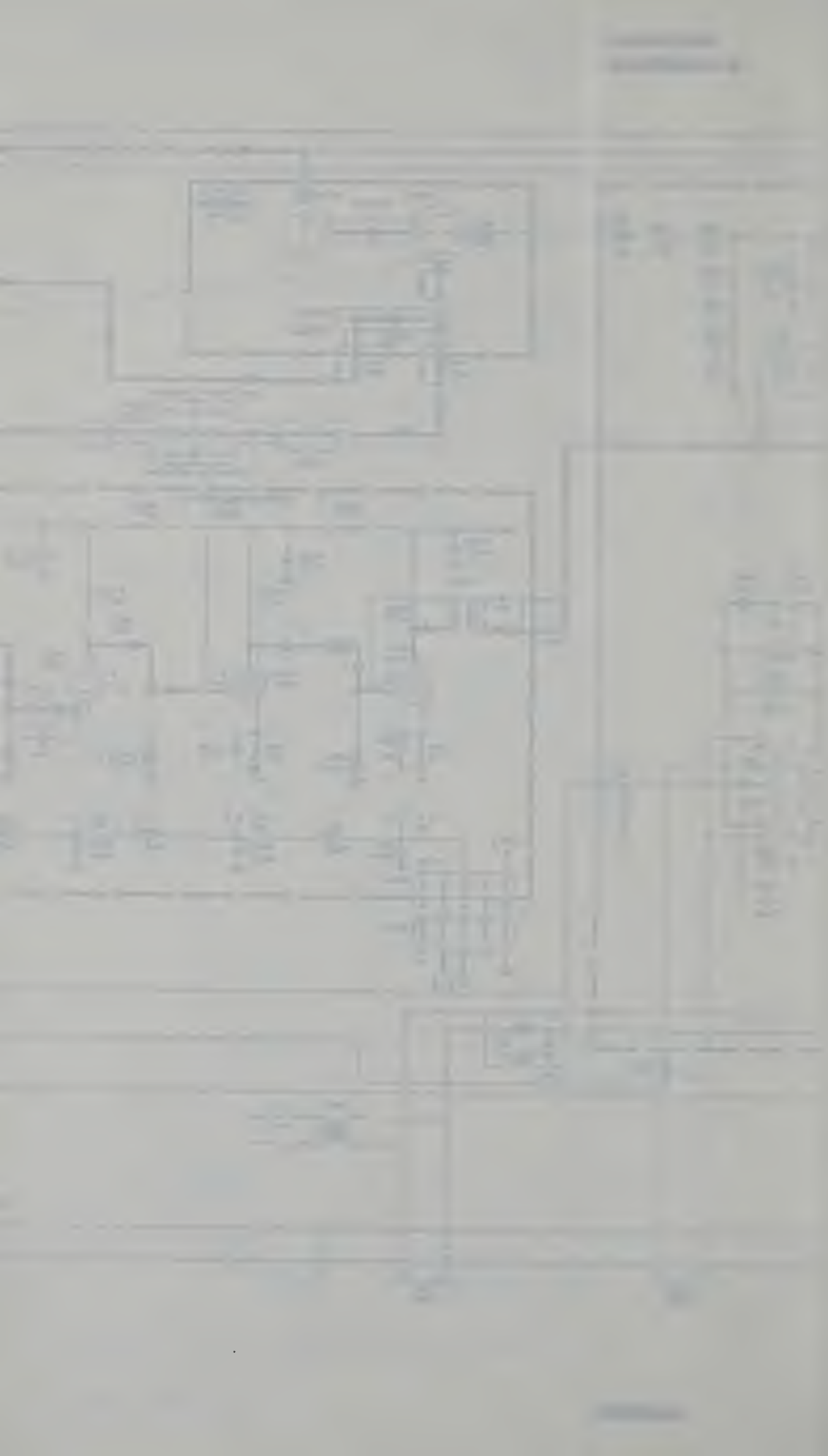

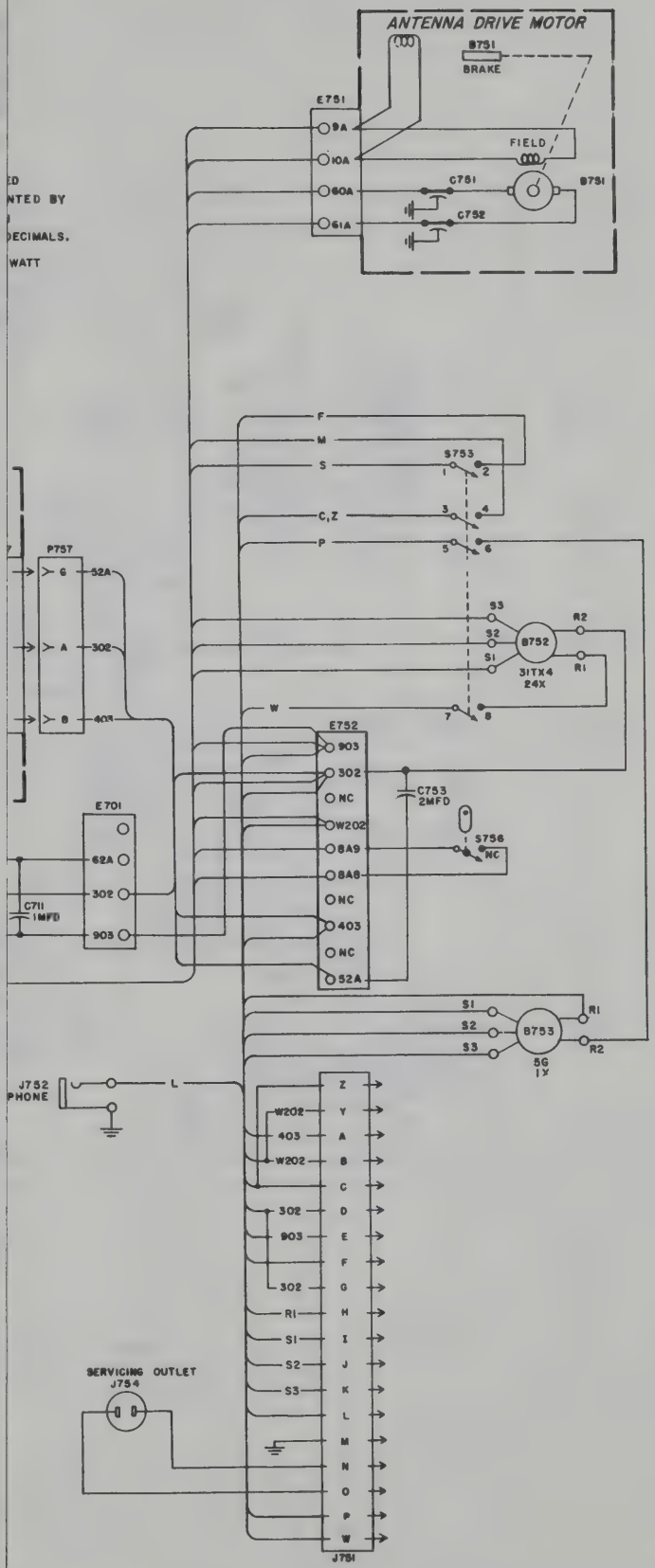

Figue 7—118. Antenna Base Schematic

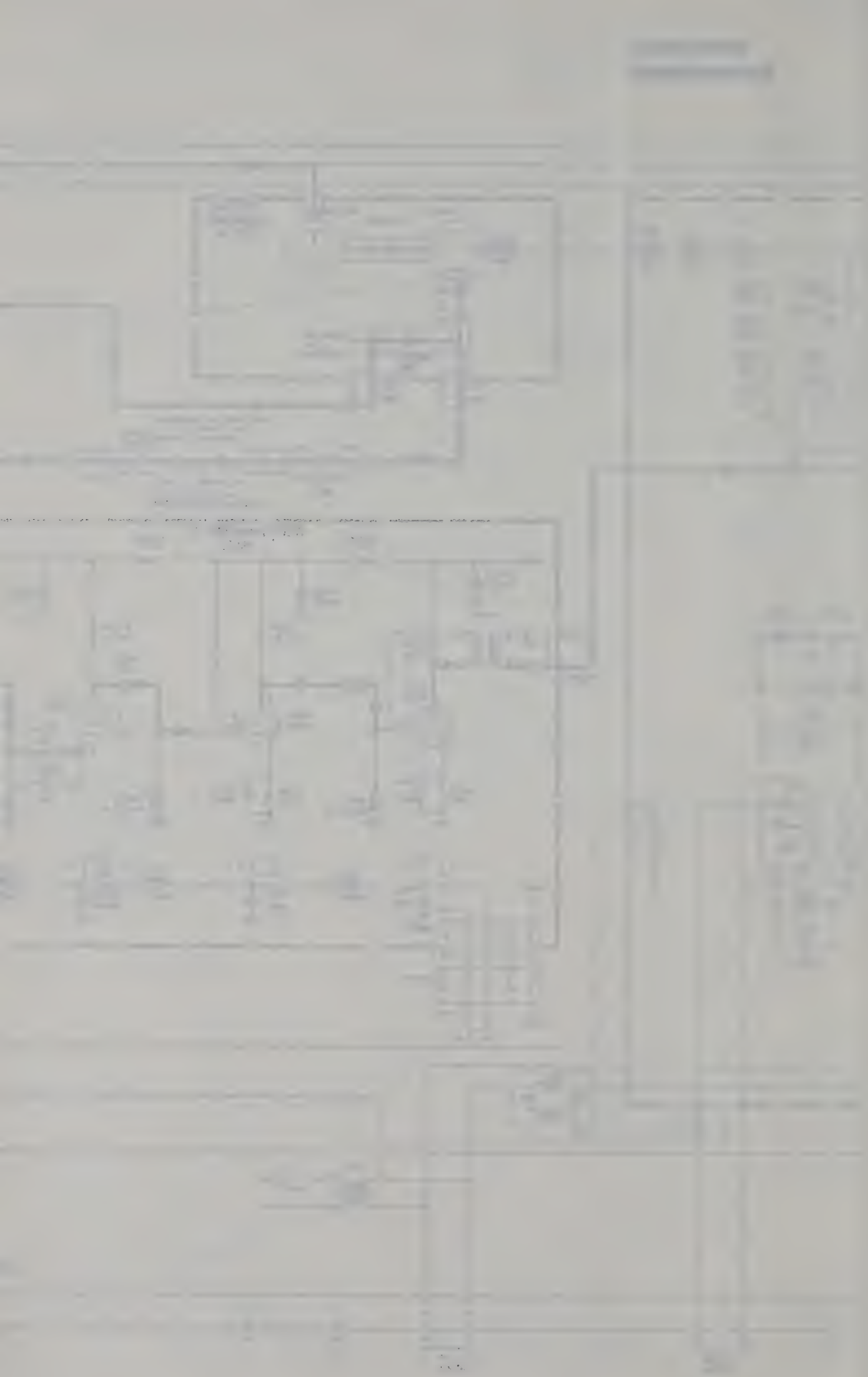

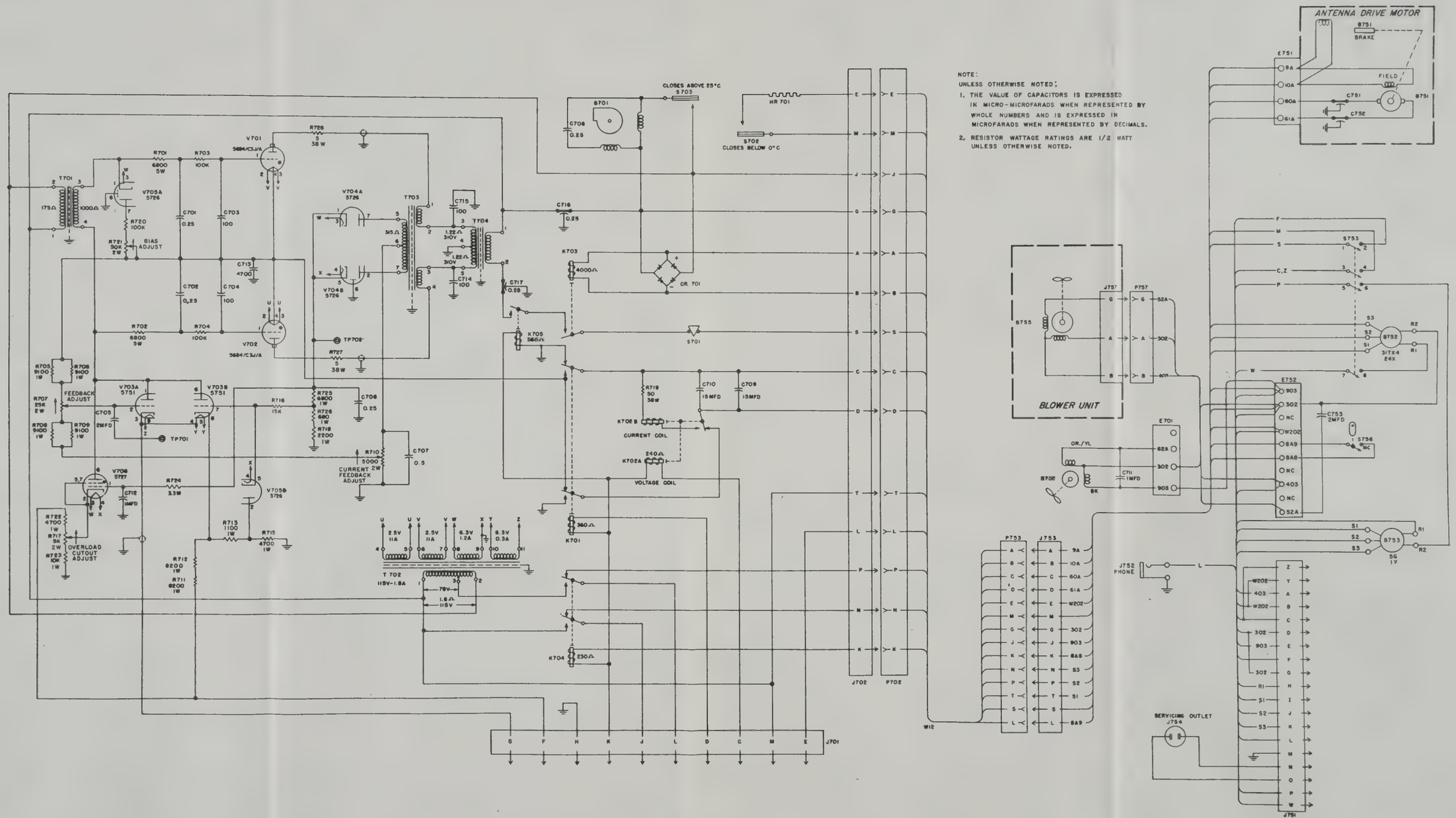

Figure 7—118. Antenna Base Schematic

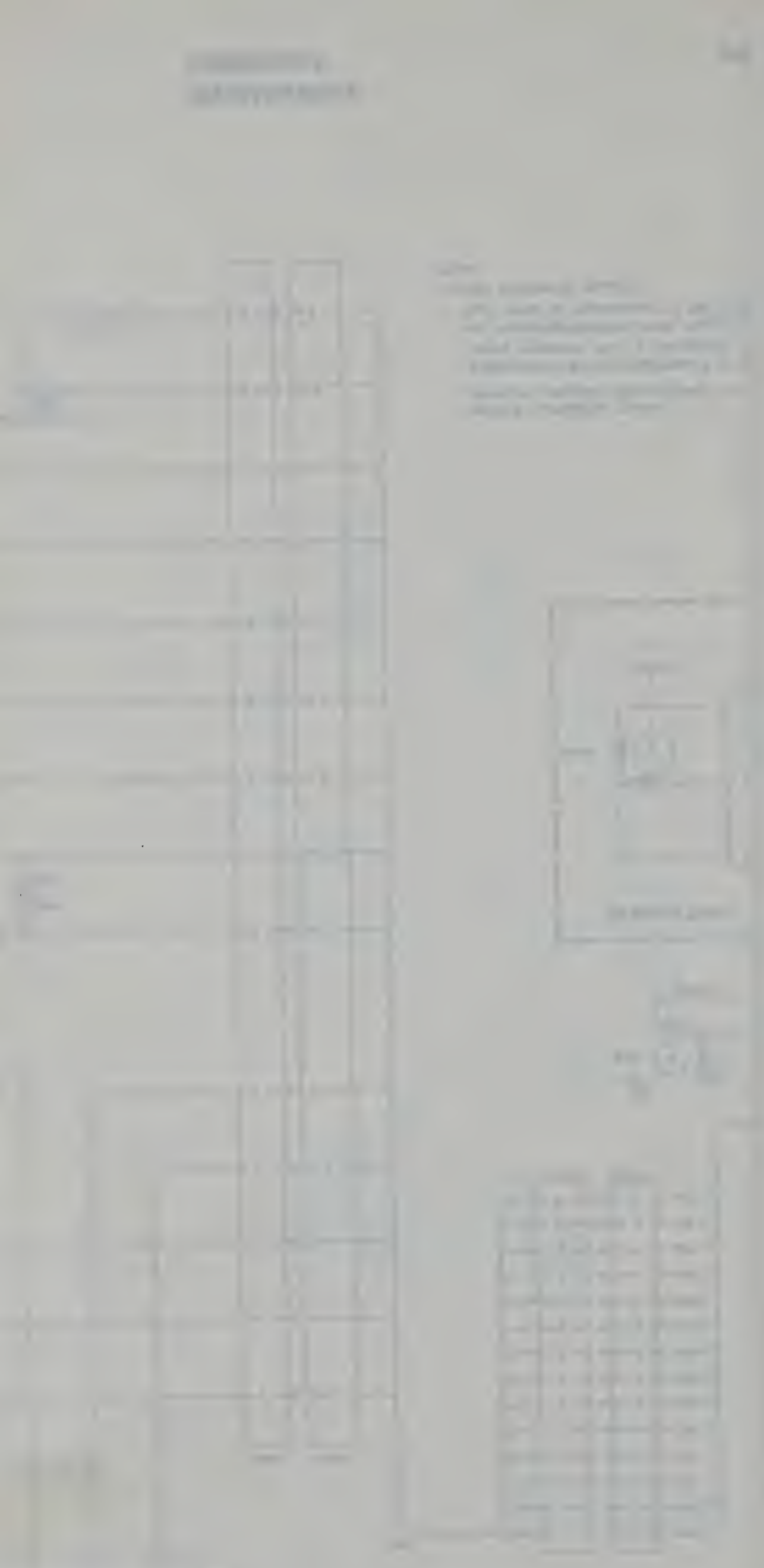

TEMPORARY CORRECTION T-1 TO TECHNICAL MANUAL FOR
RADIO SET AN/TPS-1G (NAVSHIPS 92951)

Make the following pen and ink corrections in the Technical Manual:

Page 1-6 Figure 1-11 - Correct the illustration as follows:
Delete call-out "RF754", substitute "RF855"
Delete existing call-out "RF855", substitute "RF754"

Page 1-17 Table 1-3 - Add the following item to Shipping Box No. 14:
1 Rod Assembly, Ground

Page 2-6 Figure 2-6 - Change the connections to T155, S156 and T151 in accordance with the sketch given below:

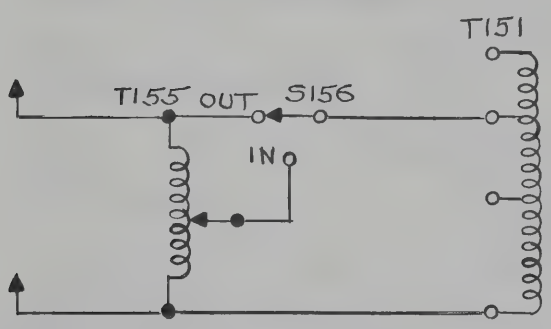

Page 2-8 Paragraph 2.d. - Delete the fifth sentence "In the IN position, T155, the magnetron aging variac, etc..", substitute the following sentence: "In the IN position, the output of magnetron aging variac T155 is applied to the primary of T151."

Page 2-10 Figure 2-7 - Change the indicated value of resistor R522 from "2.2 MEG" to "1.2 MEG"

Page 2-37 Figure 2-29 - Change the indicated value of resistor R4301 from "47K" to "33K"

Page 2-44 Figure 2-33 - Connect the junction of capacitors C645 and C646 to the plate (pin 1) of V621A, as shown in sketch below, instead of to the junction of resistors R1655 and R1648

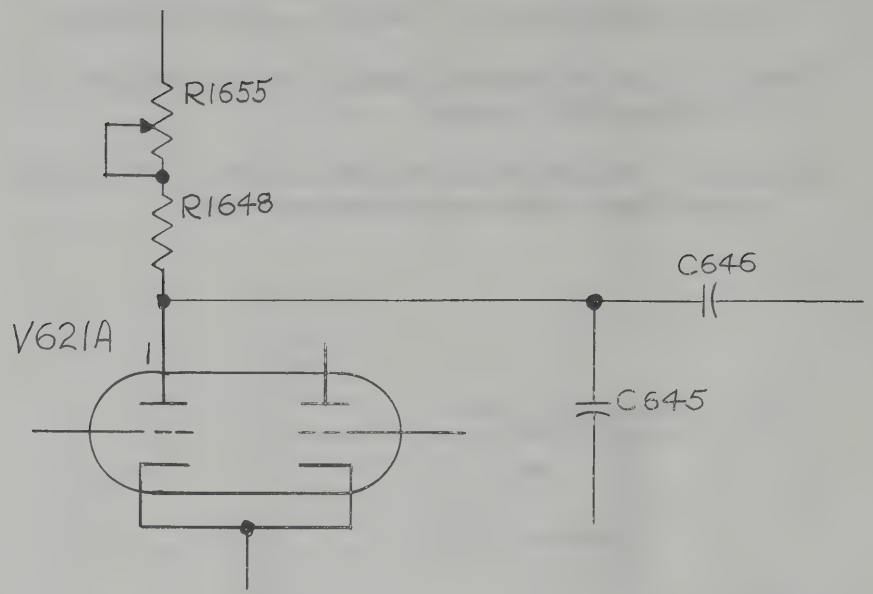

Page 2-55 Paragraph 9.c. - Second line of third paragraph in right-hand column - change from "which is operated by S618 and S619" to "which is operated by S618 and S617"

Page 3-8 Paragraph 2.b.(12) - Add the following CAUTION, preceding the Note:

"CAUTION

To prevent damage to the sighting device, carefully remove the antenna horn and boom assembly from Case CY-2072/TPS-1G before removing the center and outer sections of the reflector assembly."

Page 3-11 Figure 3-12 - Delete call-out "RAIN SHIELD"

Page 3-13 Figure 3-15 - Correct the illustration as follows:
Delete call-out "RF754", substitute "RF855"
Delete existing call-out "RF855", substitute "RF754"

Page 3-17 Paragraph 6.c.(1) - Add the following sentence to the CAUTION: "To prolong the life of MAGNETRON AGING VARIAC switch S156, the switch setting should not be changed to either position until the RADIATE OFF button on the front panel of the indicator has first been depressed."

Page 4-4 Paragraph 2.b.(2) - Add the following sentence to the CAUTION: "To prolong the life of MAGNETRON AGING VARIAC switch S156, the switch setting should not be changed to either position until the RADIATE OFF button on the front panel of the indicator has first been depressed."

Page 6-9 Paragraph 7.e.(3) - Delete "W503", substitute "the crystal holder assembly (part of harmonic filter Z509)"

Paragraph 7.e.(4), (5) and (7) - Delete "W503", substitute "the crystal holder assembly"

Page 6-16 Paragraph 12 - Delete the existing paragraph and substitute the following:

"12. LUBRICATION.

The only lubrication required for Radio Set AN/TPS-1G is lubrication of Antenna Base AB-498/TPS-1G, in two places. Two hydraulic fittings are provided, one for lubricating the upper bearing support (shaft ball bearing) and the other for lubricating the antenna drive gears.

To lubricate the shaft ball bearing, remove the cap on the hydraulic fitting (see table 6-4 for the location of the fitting). Apply type 14-G-10 bearing grease to the fitting using three strokes of the grease gun. Replace the cap on the fitting. Lubricate the shaft ball-bearing semi-annually.

To lubricate the antenna drive gears, remove the cap on the hydraulic fitting which is located on the front of the antenna drive gear housing, beneath service outlet J754. Remove the drain plug on the bottom of the antenna drive gear housing. Apply type MIL-G-7118 aircraft grease to the fitting using ten strokes of the grease gun. While applying the grease, rotate the antenna continuously at 15 RPM, either clockwise or counter-clockwise. Replace the drain plug and cap. Lubricate the antenna drive gears quarterly, or each 600 hours of operation."

Page 7-55 Paragraph 7.b.(5)(b) - Third sentence - Delete "UG-260/U", substitute "UG-290/U"

Page 7-87 Figure 7-71 - The existing illustration is incorrect and is replaced by the illustration on page 5 of this temporary correction

Page 7-88 Paragraph 9.b.(3)(b)10. - Insert the following sentence between the first and second sentences of 10: "Depress the RADIATE OFF button on the front panel of the azimuth and range indicator"
Add the following sentence to the CAUTION:
"To prolong the life of MAGNETRON AGING VARIAC switch S156, the switch should not be set to either position until the RADIATE OFF button on the indicator has first been depressed"

Page 7-100 Figure 7-83 - Correct the illustration as follows:
Delete call-out "B753", substitute "B752"
Delete existing call-out "B752", substitute "B753"
Change call-out "B752 CLAMP SCREW (4)" to "B753 CLAMP SCREW (4)"

Page 7-105 Paragraph 10.d. - Add the following sentence to the first paragraph: "If any of the gears are damaged or worn so that replacement is necessary, the whole set of gears should be replaced as a unit."

Figure 7-88 - Correct the illustration as follows:
Delete call-out "B752", substitute "B753"
Delete existing call-out "B753", substitute "B752"

Page 7-107 Paragraph 10.d.(13) - Delete the existing paragraph, substitute the following:
"(13) To separate the intermediate housing, item 75, from the base, item 53, remove all the bolts fastening the two castings. Remove the three bolts fastening the shaft collar, item 69. Remove item 69 and the gasket, item 70. Insert three bolts into the tapped holes X, Y, and Z. (Use bolts that are approximately 1/2" longer than the bolts used to hold the intermediate and base housing together.) These bolts are to be used as jacks to separate the castings. Turn each of the bolts one half turn at a time until the castings are separated slightly (1/16"). Using a small soft metal cylinder approximately 1/4" in diameter, tap the shaft centers of items 49 and 51 as the jack screws

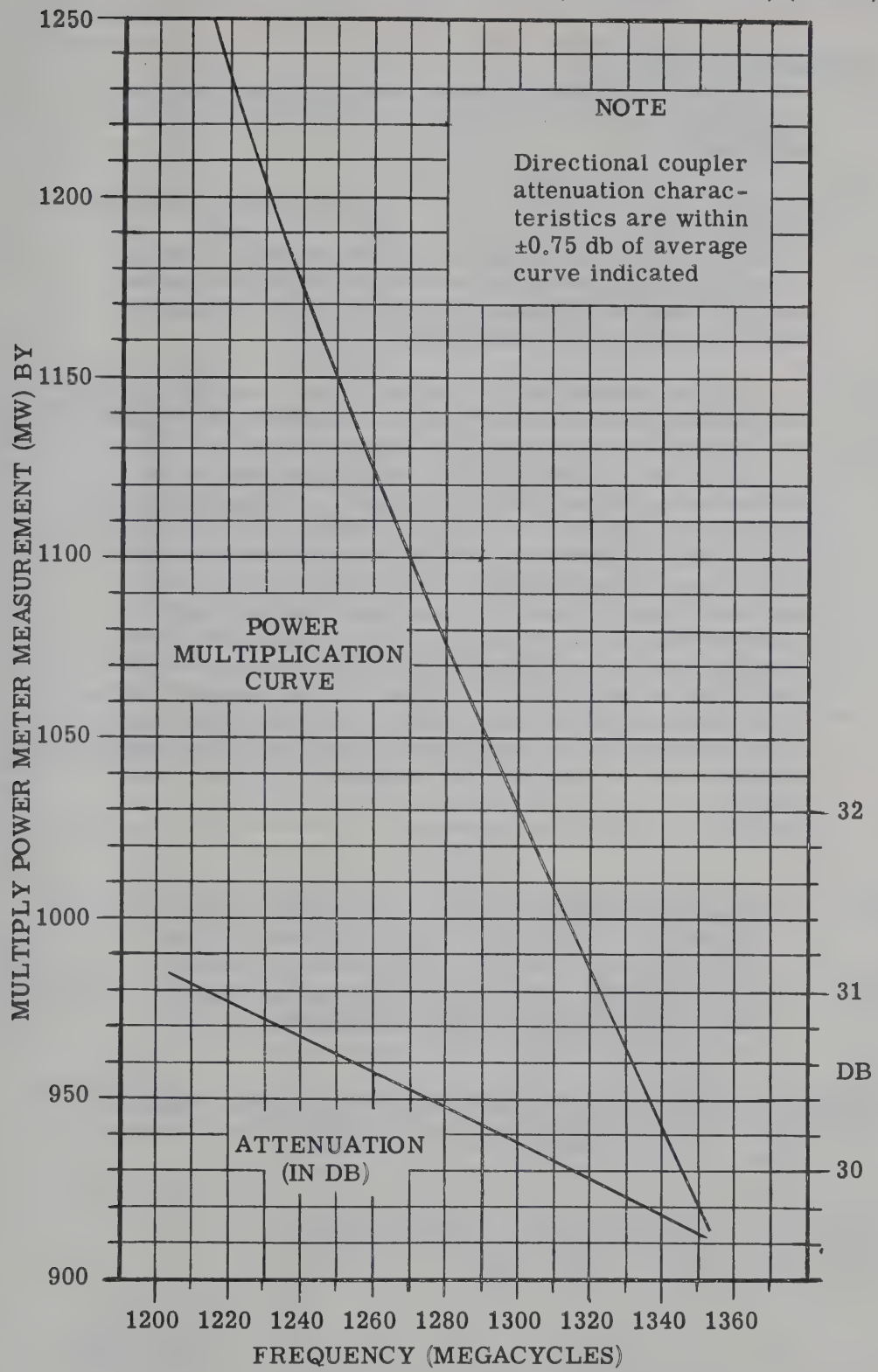

Figure 7-71. Directional Coupler Output Characteristics

Page 7-107 (Cont'd) Paragraph (13) (Cont'd)

are gradually tightened. Repeat this procedure until the bearings, items 73, 50 and 35 are free from the intermediate housing."

Paragraph 10.d.(14) - Delete the existing paragraph, substitute the following:

"(14) To remove the spindle assembly, item 81, first remove the eight screws and lockwashers which secure the housing, item 88. Remove the housing, item 88, packing, item 87, nut, item 86, and washer, item 85.

Tip the base on its side (the side away from the spindle) and support the spindle along its full length on a soft material to prevent scratching. The spindle should be in a horizontal position. Place a block of soft metal against the bottom end of the spindle and tap gently. At the same time lift gently on the gear assemblies, items 49 and 51. Continue this procedure until item 51 is free to be removed with its associated bearings. Continue to tap the base of the spindle and lift gently on item 49 until it is free to be removed with its associated bearings. Holding the base, item 53, continue to tap the bottom of the spindle until it is free. Use normal caution to remove any of the other items in this assembly. Lay the parts on a clean bench in an orderly fashion and note the relative position of the respective parts so that they may be reassembled in the proper manner.

CAUTION

Do not disassemble the gear assemblies, items 49 and 51. Do not remove the hub, item 47 from the spur gear, item 46. Do not remove the spur gear, item 83, from the spindle assembly, item 81. Removal of these items will destroy the inherent concentricity of the mating parts."

Page 7-111 Figure 7-91 - Change the connections to K152, S156, T155 and T151 in accordance with the sketch given on the following page:

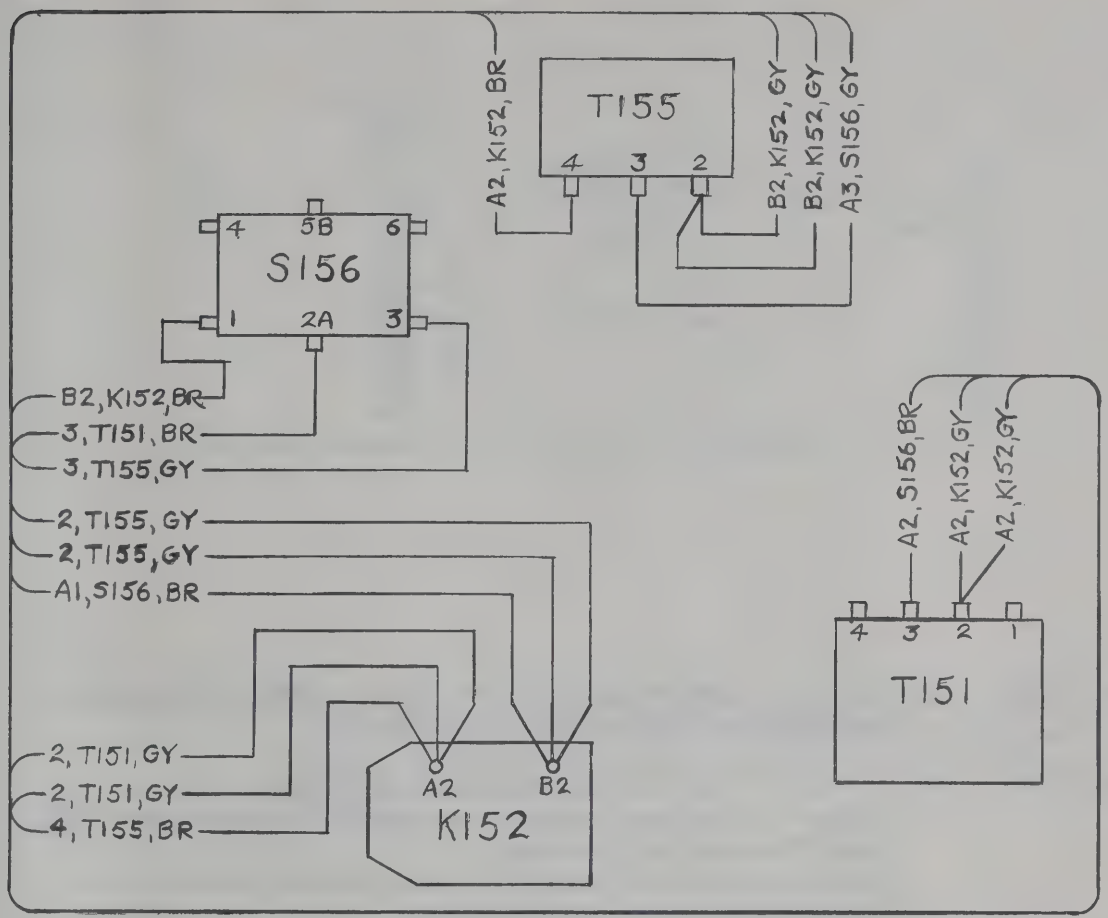

Page 7-117 Figure 7-94 - Connect the left-hand terminal of capacitor C664 (locating coordinates 16 G) to E601-P instead of E601-N

Page 7-143 Figure 7-107 - Delete the note under the waveform observed at J156 (locating coordinates 5 B), substitute the following: "T = 2.2 usec at 67% voltage points"

Page 7-145 Figure 7-108 - Change the note under MAGNETRON AGING JACK J420 (near the right-hand margin) to read "SEE NOTE 5" instead of "SEE NOTE 7"

Page 7-149 Figure 7-109 (Sheet 2) - Change the connections to MAGNETRON AGING VARIAC T155 and associated switch S156 in accordance with the sketch given on the following page:

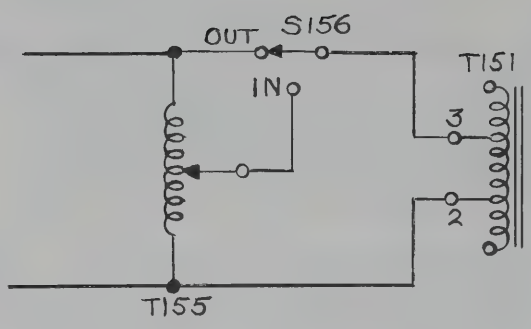

Page 7-151 Figure 7-110 - Change the indicated type number of P402 from "AN-3106C-28-9S" to "AN-3106A-28-9S"

Page 7-153 Figure 7-111 - Correct the illustration as follows:

Change the indicated primary resistance of transformer T103 from "78 ohms" to "23 ohms"

Change the indicated secondary resistance of transformer T103 from "23 ohms" to "36 ohms"

Add the reference designation "Z101" to the delay line which is adjacent to V106B

Add a connection from terminal 3 of transformer T105 to the +300V line

Change the connections to MAGNETRON AGING VARIAC T155 and associated switch S156 in accordance with the sketch given on the following page:

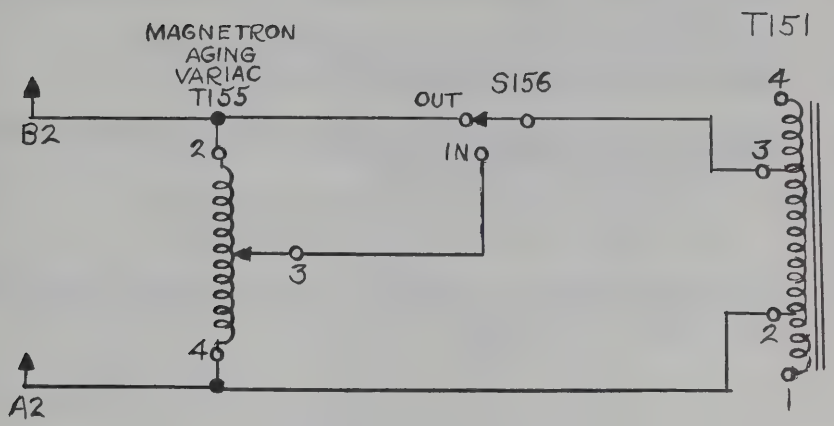

Page 7-155 Figure 7-112 - Connect the junction of capacitors C645 and C646 to the plate (pin 1) of V621A, as shown in the sketch below, instead of to the junction of resistors R1655 and R1648

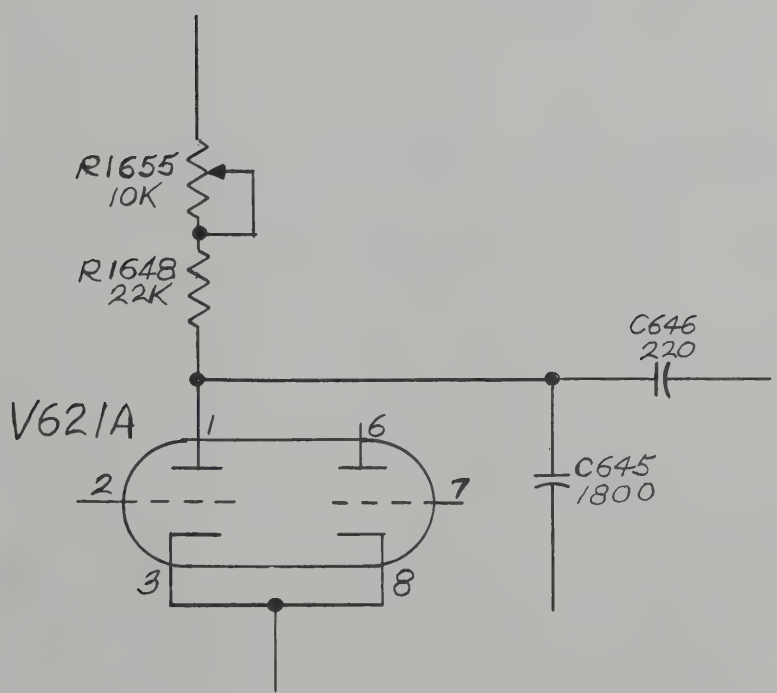

Page 7-161 Figure 7-114 - Change the indicated value of resistor R4301 from "47K" to "33K"

Page 7-163 Figure 7-115 - Change "XI1401" to "XI401"

Page 7-169 Figure 7-117 - Change the indicated value of resistor R522 from "2.2 MEG" to "1.2 MEG"

Insert this temporary correction in the technical manual immediately after the front cover.

TEMPORARY CORRECTION T-2 TO TECHNICAL MANUAL FOR
RADIO SET AN/TPS-1G (NAVSHIPS 92951)

Make the following pen and ink corrections in the Technical Manual:

Page 1-17 — Table 1-3 - Change the tube type in Shipping Box No. 11 (reserve parts) from 1B3GT to 1K3/1J3.

Page 1-18 — Table 1-4 - Change tube type 1B3GT to 1K3/1J3.

Page 2-46 — Figure 2-35 - Change the +8000V portion of the illustration in accordance with the sketch given below:

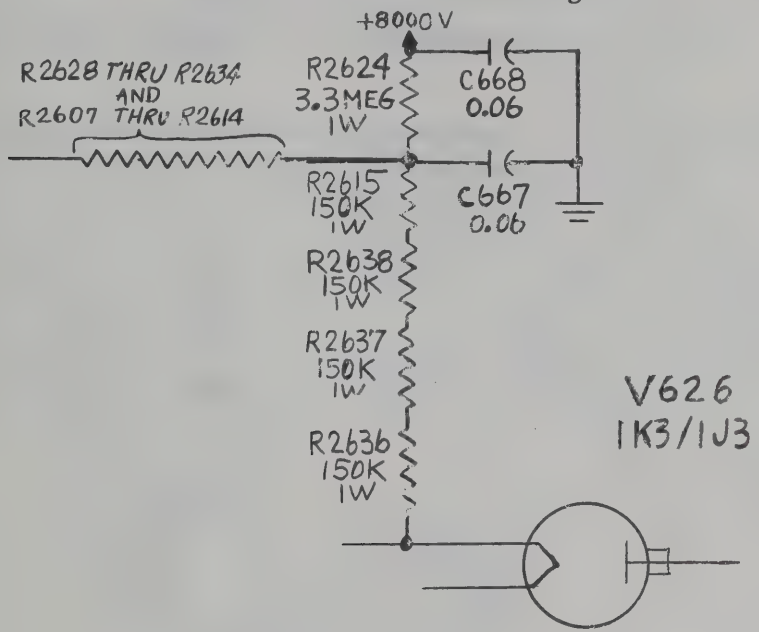

Page 5-7 — Table 5-2 - Change the tube type of tube V626 from 1B3GT to 1K3/1J3.

Page 5-11 — Figure 5-10 - Delete call-out "1B3GT", substitute "1K3/1J3".

Page 6-14 Table 6-3 - Change tube type 1B3GT to 1K3/1J3.

Page 7-28 Paragraph 6.d. - Fourth line from bottom - change "C665" to "C666".

Page 7-39 Figure 7-29 - Correct the illustration as follows:
Delete call-out "C665"
Delete call-out "R2616"
Add call-out "R2638" directly beneath call-out "R2637".

Page 7-45 Figure 7-34 - Change tube type of V626 from 1B3GT to 1K3/1J3.

Page 7-117/7-118 Figure 7-94 - Change the high-voltage portion of the wiring diagram (locating coordinates 12 & E) in accordance with the sketch given below:

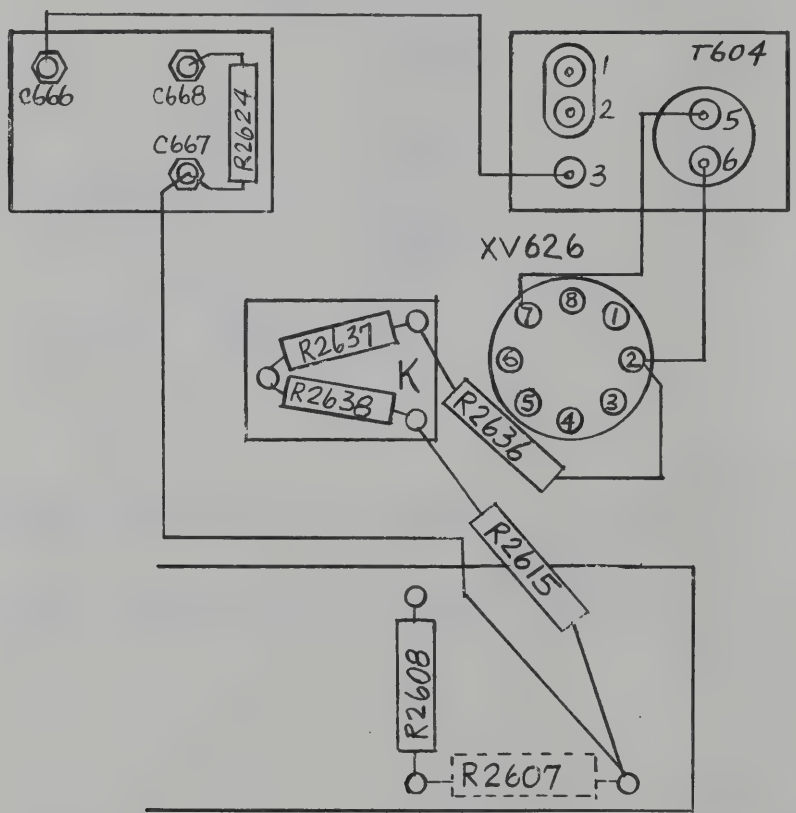

Page 7-155/7-156 Figure 7-112 - Change the +8000V portion of the high-voltage supply (center of page on right-hand margin) in accordance with the sketch given below:

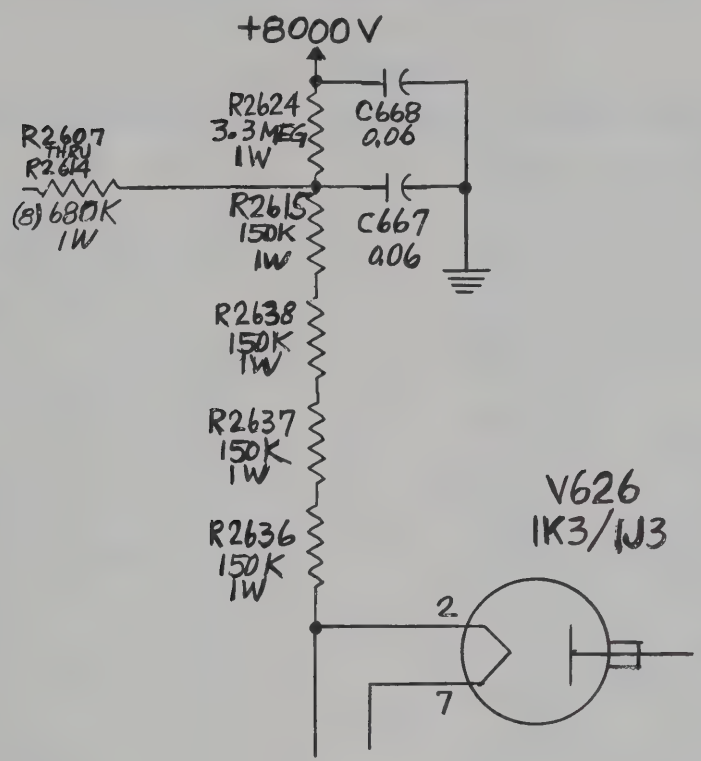

Insert this temporary correction in the technical manual immediately after the front cover.

TECHNICAL MANUAL
No. 11-5840-222-15

HEADQUARTERS,
DEPARTMENT OF THE ARMY
Washington 25, D. C., *18 November 1958*

RADIO SET AN/TPS-1G

Paragraph *Page*

SECTION 1 — GENERAL DESCRIPTION

1. General Description ..... 1—1
2. Description of Units ..... 1—1
   - *a.* Mounting MT-960/TPS-1D ..... 1—1
   - *b.* Radar Modulator MD-144A/TPS-1D 1—2
   - *c.* Azimuth and Range Indicator IP-141A/TPS-1D ..... 1—2
   - *d.* Signal Comparator CM-36A/TPS-1D 1—3
   - *e.* Power Supply PP-674A/TPS-1D ..... 1—3
   - *f.* Radar Receiver-Transmitter RT-212A/TPS-1D ..... 1—3
   - *g.* Antenna Base AB-498/TPS-1G ..... 1—4
   - *h.* Antenna AS-673/TPS-1E ..... 1—5
   - *i.* Cables, Plugs, and RF Connectors .... 1—5
   - *j.* Shelter S-68/TPS-1D ..... 1—7
   - *k.* Case CY-1060/TPS-1D ..... 1—7
   - *l.* Case CY-2071/TPS-1G ..... 1—7
   - *m.* Case CY-2078/TPS-1G ..... 1—7
   - *n.* Case CY-2072/TPS-1G ..... 1—7
   - *o.* Tuned Cavity TS-172B/UP ..... 1—7
   - *p.* Case Accessories CY-1297/TPS-1D .. 1—7
   - *q.* Variable Power Transformer TF-238/U ..... 1—7
   - *r.* Signal Comparator Test Set TS-1002/TPS-1G ..... 1—10
   - *s.* Tune-up Mirror ..... 1—11
3. Basic Principles of Operation ..... 1—11
4. Phone Circuit ..... 1—12
5. Equipment Changes Made During Production ..... 1—12
6. Functional Similarity to Radio Set AN/TPS-1D ..... 1—12
   - *a.* Major Functional Differences ..... 1—12
   - *b.* Minor Differences ..... 1—12
7. Interchangeability of Components Between AN/TPS-1D and AN/TPS-1G 1—13
   - *a.* Components of AN/TPS-1G Installed in AN/TPS-1D ..... 1—13
     - (1) Radar Modulator MD-144A/TPS-1D ..... 1—13
     - (2) Azimuth and Range Indicator IP-141A/TPS-1D ..... 1—13
     - (3) Signal Comparator CM-36A/TPS-1D ..... 1—13
     - (4) Power Supply PP-674A/TPS-1D 1—13
     - (5) Radar Receiver-Transmitter RT-212A/TPS-1D ..... 1—13
     - (6) Antenna Base AB-498/TPS-1G 1—13
     - (7) Antenna AS-673/TPS-1E ..... 1—13
     - (8) Mounting MT-960/TPS-1D ..... 1—13
     - (9) Variable Power Transformer TF-238/U ..... 1—13
     - (10) Signal Comparator Test Set TS-1002/TPS-1G ..... 1—13
     - (11) Tuned Cavity TS-172B/UP .... 1—13
   - *b.* Components of AN/TPS-1D Installed in AN/TPS-1G ..... 1—13
     - (1) Radar Modulator MD-144/TPS-1D ..... 1—13
     - (2) Azimuth and Range Indicator IP-141/TPS-1D ..... 1—13
     - (3) Signal Comparator CM-36/TPS-1D ..... 1—13
     - (4) Power Supply PP-674/TPS-1D 1—13
     - (5) Radar Receiver-Transmitter RT-212/TPS-1D ..... 1—13
     - (6) Antenna Base AB-221/TPS-1D 1—15
     - (7) Antenna AS-548/TPS-1D ..... 1—15
     - (8) Mounting MT-960/TPS-1D ..... 1—15
     - (9) Test Set, Radar AN/UPM-30 .. 1—15
8. Report Forms ..... 1—15
9. Equipment Supplied ..... 1—15
10. Equipment Required But Not Supplied .. 1—15
11. Shipping Data ..... 1—15
12. Electron Tube Complement ..... 1—15
13. Semi-Conductor Device Complement .... 1—15
14. Reference Data ..... 1—15
15. Interconnecting Cables ..... 1—15

SECTION 2 — THEORY OF OPERATION

1. General ..... 2—1
   - *a.* Basic MTI Theory ..... 2—1
   - *b.* MTI Circuit Requirements ..... 2—3
   - *c.* Operating Limitations ..... 2—4
2. Radar Modulator MD-144A/TPS-1D .... 2—7
   - *a.* General ..... 2—7
   - *b.* Trigger Circuits ..... 2—7
   - *c.* Modulator Circuit ..... 2—7

TABLE OF CONTENTS (Cont'd)

Paragraph *Page*

SECTION 2 — THEORY OF OPERATION (Cont'd)

d. High-Voltage Power Supply ..... 2—8
e. Fuses ..... 2—8
f. RF Noise Suppression ..... 2—8
g. Blower and Heater ..... 2—8
h. Protective Relay ..... 2—8
i. Interlocks ..... 2—9
3. Radar Receiver-Transmitter RT-212A/TPS-1D ..... 2—9
a. General ..... 2—9
b. Magnetron ..... 2—9
c. Magnetron Frequency Stability ..... 2—9
d. RF System ..... 2—11
(1) General ..... 2—11
(2) Coho Mixer RF502 ..... 2—14
(3) Cavities Assembly RF503 ..... 2—14
(4) Harmonic Attenuator Z509 ..... 2—14
(5) Local Oscillator Injector RF503A and Signal Mixer CR503 ..... 2—14
e. Local Oscillator and Control Circuit Assembly U501 ..... 2—17
(1) General ..... 2—17
(2) Local Oscillator Z511 ..... 2—17
(3) Local Oscillator Tuning ..... 2—17
f. Coho Preamplifier U502 ..... 2—20
g. IF Preamplifier ..... 2—20
h. Miscellaneous Circuits ..... 2—21
i. Fuses ..... 2—21
4. Signal Comparator CM-36A/TPS-1D .... 2—21
a. General ..... 2—21
b. 60-MC IF Amplifier ..... 2—22
c. Coherent Oscillator ..... 2—25
d. MTI Repetition Rate Trigger Amplifier ..... 2—28
e. 2500-Microsecond Delay Line ..... 2—29
f. Delay Amplifier ..... 2—30
g. Non-delay Amplifier ..... 2—33
h. Video Balancer and Amplifier ..... 2—33
i. MTI Gate Generator ..... 2—36
5. Signal Comparator Test Set TS-1002/-TPS-1G ..... 2—37
6. Azimuth and Range Indicator IP-141A/TPS-1D ..... 2—39
a. General ..... 2—39
b. Sweep Circuits ..... 2—39
c. Marker Generators ..... 2—41
d. Strobe Gate Generator ..... 2—43
e. Video Circuits ..... 2—44
f. Miscellaneous Circuits ..... 2—47

Paragraph *Page*

SECTION 2 — THEORY OF OPERATION (Cont'd)

7. Power Supply PP-674A/TPS-1D ..... 2—47
a. General ..... 2—47
b. Power Supply Circuits ..... 2—47
c. Control Chassis ..... 2—50
d. IFF Power and Synch Connections .. 2—50
8. Variable Power Transformer TF-238/U 2—50
a. General ..... 2—50
b. Circuit Description ..... 2—50
9. Antenna Base AB-498/TPS-1G ..... 2—51
a. General ..... 2—51
b. Antenna Drive Assembly ..... 2—51
c. Servo Amplifier ..... 2—53
10. Antenna Synchro System ..... 2—57
11. Antenna AS-673/TPS-1E ..... 2—57

SECTION 3 — INSTALLATION

1. Unpacking ..... 3—3
2. Field Installation ..... 3—3
a. Selection of Operating Site ..... 3—3
b. Erection of Tower ..... 3—4
c. Erection of Shelter Tent ..... 3—11
d. Heater Power Connections ..... 3—12
e. Marker Spacing Adjustment ..... 3—13
f. Dismantling and Preparation of Equipment for Transport ..... 3—13
3. Installation and Operation of Azimuth and Range Indicator at Remote Point 3—14
4. Installation and Operation of Antenna at Remote Point ..... 3—14
a. General ..... 3—14
b. Installation ..... 3—15
c. Connections ..... 3—16
d. Operation ..... 3—16
5. Installation of Repeater PPI ..... 3—16
a. Interconnections ..... 3—16
b. Changes in Power Supply Unit ..... 3—16
c. Zeroing ..... 3—16
6. Equipment Check and Initial Adjustments ..... 3—16
a. Visual Check ..... 3—16
b. Initial Operational Checks and Adjustments ..... 3—16
c. Procedure ..... 3—16
d. IFF Adjustments ..... 3—17
7. Fixed Station Installation ..... 3—23
8. Portable Installations ..... 3—23
9. Installation of Mil Dial ..... 3—23
10. Outline Drawings ..... 3—23

TABLE OF CONTENTS (Cont'd)

Paragraph *Page*

SECTION 4 — OPERATION

1. General 4–1
   a. Approach to Operation 4–1
   b. Limitations of MTI 4–1
2. Operating Procedure 4–4
   a. General 4–4
   b. Starting 4–4
   c. Checking 4–9
   d. Operating 4–13
3. Routine Alignment 4–13
   a. General 4–13
   b. Alignment Outline 4–14
   c. Alignment Procedure 4–14
4. Operating Notes 4–19
   a. Video Gain Controls 4–19
   b. Receiver Gain Control 4–19
   c. Coordination of A and PPI Scopes .. 4–19
   d. Use of Internal Triggers 4–21
   e. Exhaust Fan Operation 4–21
   f. Protective Devices 4–21
   g. Use of Phone Circuit 4–22
   h. Range Marker Spacing 4–22
   i. MTI Range Gate 4–22

SECTION 5 — OPERATOR'S MAINTENANCE

1. General 5–1
2. Routine Checks 5–1
3. Emergency Maintenance 5–1
   a. Replacing Fuses 5–1
   b. Replacing Electron Tubes 5–1
      (1) General 5–1
      (2) Locating Faulty Tubes 5–6
      (3) Replacement of Scope Tubes 5–6
      (4) Gaining Access to Unit Chassis 5–6

SECTION 6 — PREVENTIVE MAINTENANCE

1. General 6–1
2. Gaining Access to Unit Chassis 6–1
3. Gaining Access to Antenna on Field Installations 6–1
4. Inspection 6–1
5. Cleaning 6–3
   a. General 6–3
   b. Terminal Strips 6–3
   c. Tubes 6–3
   d. Touching Up and Refinishing 6–3
   e. Cleaning Air Filters 6–3
   f. Case Air Valves 6–4

Paragraph *Page*

SECTION 6 — PREVENTIVE MAINTENANCE (Cont'd)

6. Fuse Maintenance 6–4
7. Tube and Crystal Replacement 6–4
   a. General 6–4
   b. Local Oscillator Tube (V505) Replacement 6–6
   c. Magnetron (V502) Replacement 6–6
   d. Cavities Assembly TR Tube (V503A and V504A) Replacement 6–8
   e. Signal Mixer Crystal (CR503) Replacement 6–9
   f. Coho Mixer Crystal (CR502) Replacement 6–9
8. Relay Maintenance 6–12
9. Cable Check 6–12
10. Spare Tube Check 6–13
11. Retropicalization 6–15
   a. General 6–15
   b. Procedure 6–15
12. Lubrication 6–16

SECTION 7 — CORRECTIVE MAINTENANCE

1. General 7–1
   a. Use of Section 7–1
   b. Primary Power and DC Control Circuits 7–1
   c. Filament Power 7–2
   d. Resistors 7–2
   e. Crystal Diodes 7–3
   f. Delay Line W2350 7–3
   g. Disabling Interlocks 7–3
      (1) General 7–3
      (2) High-Voltage Measurements 7–4
      (3) Modulator 7–4
      (4) Azimuth and Range Indicator .. 7–4
      (5) Signal Comparator 7–4
      (6) Power Supply 7–4
      (7) Receiver-Transmitter 7–4
      (8) Servo Amplifier 7–5
      (9) Antenna Safety Switch 7–5
   h. Convenience Outlets 7–5
   i. Phone Circuit 7–6
2. Use of Test Equipment 7–6
   a. General 7–6
   b. Multimeter 7–6
   c. Vacuum-Tube Voltmeter 7–6
   d. Oscilloscope (General Purpose) 7–6
   e. Oscilloscope (Special Types) 7–7
   f. Tube Tester 7–7

TABLE OF CONTENTS (Cont'd)

Paragraph *Page*

SECTION 7 — CORRECTIVE MAINTENANCE (Cont'd)

g. Sweep Generator ..... 7—7
h. Test Attenuator Z2350 ..... 7—9
i. Use of 1-5/8 in. Coaxial Adapter .... 7—9
3. Component Replacement ..... 7—9
a. General ..... 7—9
b. Tubes ..... 7—9
c. Capacitors ..... 7—15
4. Trouble-Shooting Notes ..... 7—15
5. Radar Modulator MD-144A/TPS-1D ..... 7—15
a. Trouble-Shooting ..... 7—15
b. Repetition Rate Adjustment R110 .... 7—15
c. Protective Relay Balance Adjustment R168 ..... 7—22
d. Modulator High Voltage Adjustment 7—22
6. Azimuth and Range Indicator IP-141A/TPS-1D ..... 7—22
a. Trouble-Shooting ..... 7—22
b. Multivibrator and Blocking Oscillator Resistor Replacement ..... 7—25
c. Checking Circuits Under Operating Conditions ..... 7—25
d. Scope High-Voltage Supply Measurements ..... 7—28
e. Adjustments ..... 7—28
(1) General ..... 7—28
(2) PPI Sweep Gate R626 ..... 7—28
(3) PPI Sweep Length R651 ..... 7—28
(4) Coarse Intensity R660A/B ..... 7—30
(5) PPI Centering R662 and R665 .. 7—30
(6) A-scope Sweep Gate R1669 ..... 7—30
(7) A-scope Sweep Length R1676 .... 7—30
(8) A-scope Centering R1687 and R2601 ..... 7—31
(9) Strobe Lim. Adj. R1655 ..... 7—31
(10) A-scope Astigmatism R1689 ..... 7—31
(11) Strobe Int. R685 ..... 7—36
(12) A-scope Deflection Balance C659 7—36
(13) Marker Gate R691 ..... 7—36
(14) Marker Calibration Z601 ..... 7—36
(15) Connections for 5- and 25-mile or 10-mile Markers ..... 7—37
(16) Marker B.O. Adj. R1618 ..... 7—37
(17) Marker Intensity R1617 and R1629 ..... 7—37
(18) Antenna Speed R2619 ..... 7—37
(19) Synchro Alignment Check and Adjustment ..... 7—37

Paragraph *Page*

SECTION 7 — CORRECTIVE MAINTENANCE (Cont'd)

(20) Antenna Rotate Control (R609) Mechanism Alignment ..... 7—44
7. Signal Comparator CM-36A/TPS-1D ..... 7—44
a. Trouble-Shooting ..... 7—44
b. Checks and Adjustments ..... 7—48
(1) General ..... 7—48
(2) Carrier Gate Length R1365 Adjustment ..... 7—48
(3) Oscilloscope Check and Adjustment of Carrier Gate R1365 .. 7—50
(4) MTI Repetition Rate Trigger Amplifier Bandwidth Check .. 7—50
(5) Checking 9- and 60-MC Amplifiers ..... 7—55
c. Pulse Delay Network W2350 Check 7—60
(1) Checking ..... 7—60
d. MTI Alignment ..... 7—61
e. MTI Maintenance ..... 7—68
(1) General ..... 7—68
(2) Local Oscillator Frequency Instability ..... 7—68
(3) Arcing in RF Lines, Pedestal or Antenna ..... 7—69
(4) Magnetron Frequency Instability 7—70
(5) Primary Power Form Factor ..... 7—72
(6) Excessive D-C Voltage Ripple .. 7—72
(7) Weather Conditions ..... 7—72
(8) Improper Value of Regulated Voltages ..... 7—72
8. Power Supply PP-674A/TPS-1D ..... 7—72
a. Trouble-Shooting ..... 7—72
b. Adjustments ..... 7—73
(1) General ..... 7—73
(2) +150-volt Supply R416 ..... 7—74
(3) +300-volt Supply R433 ..... 7—74
(4) Timing Relay R443 ..... 7—74
9. Radar Receiver-Transmitter RT-212A/TPS-1D ..... 7—74
a. Trouble-Shooting ..... 7—74
(1) General ..... 7—74
(2) Receiver Circuits ..... 7—74
(3) Transmitter Circuits ..... 7—75
b. Adjustment and Check Procedures .... 7—76
(1) General ..... 7—76
(2) Receiver ..... 7—76
(3) Transmitter ..... 7—83
10. Antenna Base ..... 7—98
a. Trouble-Shooting ..... 7—98
(1) Servo Amplifier ..... 7—98

TABLE OF CONTENTS (Cont'd)

Paragraph *Page*

SECTION 7 — CORRECTIVE MAINTENANCE (Cont'd)

(2) Drive Assembly ..... 7—98
b. Servo Amplifier Adjustments ..... 7—98
(1) General ..... 7—98
(2) Thyratron Bias Adjustment R721 7—100
(3) Voltage and Current Feedback Adjustments R707 and R710 7—100
(4) Overload Adjustment R717 ..... 7—102
c. Drive Assembly Adjustments ..... 7—103
(1) General ..... 7—103
(2) B752 and 1-speed Cam ..... 7—103

Paragraph *Page*

SECTION 7 — CORRECTIVE MAINTENANCE (Cont'd)

(3) RPPI Synchro B753 ..... 7—105
d. Drive Assembly Repair or Overhaul 7—105
11. Synchro System Alignment (Depot) ..... 7—107
a. Antenna ..... 7—107
b. Indicator ..... 7—107
12. IFF Maintenance ..... 7—108
a. Trouble-Shooting ..... 7—108
(1) Antenna ..... 7—108
(2) Sync Circuit ..... 7—108
(3) Video Circuit ..... 7—108
b. Adjustments ..... 7—108

LIST OF ILLUSTRATIONS

Figure *Title* *Page*

SECTION 1 — GENERAL DESCRIPTION

1—1 Complete Radio Set AN/TPS-1G ..... 1—0
1—2 Mounting MT-960/TPS-1D (2 shown) 1—2
1—3 Radar Modulator MD-144A/TPS-1D 1—2
1—4 Azimuth and Range Indicator IP-141A/TPS-1D ..... 1—2
1—5 Signal Comparator CM-36A/TPS-1D 1—3
1—6 Power Supply PP-674A/TPS-1D ..... 1—3
1—7 Radar Receiver-Transmitter RT-212A/TPS-1D ..... 1—4
1—8 Antenna Base AB-498/TPS-1G ..... 1—4
1—9 Antenna AS-673/TPS-1E ..... 1—5
1—10 System Cables and Plugs ..... 1—5
1—11 RF Coaxial Fittings and Cables ..... 1—6
1—12 Shelter Tent S-68/TPS-1D ..... 1—6
1—13 Case CY-1060/TPS-1D ..... 1—7
1—14 Case CY-2071/TPS-1G ..... 1—8
1—15 Case CY-2072/TPS-1G ..... 1—9
1—16 Tuned Cavity TS-172B/UP ..... 1—10
1—17 Case, Accessories CY-1297/TPS-1D .. 1—10
1—18 Variable Power Transformer TF-238/U ..... 1—10
1—19 Signal Comparator Test Set TS-1002/TPS-1G ..... 1—10
1—20 Tune-Up Mirror ..... 1—11

Figure *Title* *Page*

SECTION 2 — THEORY OF OPERATION

2—1 AN/TPS-1G Block Diagram ..... 2—2
2—2 Phase Relationship of Transmitted Signals vs. Echo Signals ..... 2—3
2—3 MTI Signal Amplitude vs. Relative Target Speed ..... 2—3
2—4 Vertical Radiation Pattern Characteristics ..... 2—4
2—5 Modulator Trigger Circuit ..... 2—5
2—6 Modulator Output Circuit ..... 2—6
2—7 Transmitter Circuit ..... 2—10
2—8 Coho Mixer Assembly ..... 2—11
2—9 Receiver-Transmitter RF System ..... 2—12
2—10 RF System Details ..... 2—13
2—11 Cavities Assembly Details ..... 2—15
2—12 Receiver Input Circuit Equivalent ..... 2—16
2—13 Harmonic Attenuator Details ..... 2—16
2—14 Local Oscillator Injector ..... 2—17
2—15 Local Oscillator ..... 2—18
2—16 Local Oscillator Details ..... 2—19
2—17 Coho Preamplifier ..... 2—20
2—18 IF Preamplifier ..... 2—21
2—19 Signal Comparator Block Diagram .... 2—22
2—20 60-Mc IF Amplifier in Signal Comparator ..... 2—23

LIST OF ILLUSTRATIONS (Cont'd)

Figure	Title	Page
	SECTION 2 — THEORY OF OPERATION (Cont'd)	
2–21	Phase Detector Characteristic	2–25
2–22	Coherent Oscillator	2–26
2–23	MTI Repetition Rate Trigger Amplifier	2–27
2–24	Delay Network Details	2–30
2–25	Delay Amplifier	2–31
2–26	Non-delay Amplifier	2–32
2–27	Video Balancer and Amplifier	2–34
2–28	MTI Gate Generator	2–36
2–29	Signal Comparator Test Set Schematic	2–37
2–30	Indicator PPI Scope Sweep and Scope Deflection	2–38
2–31	Indicator A-Scope Sweep and Scope Deflection	2–40
2–32	Indicator Marker Generators	2–42
2–33	Indicator Strobe Generator	2–44
2–34	Indicator Video Amplifiers	2–45
2–35	Indicator High-Voltage Supply	2–46
2–36	Power Supply Main Chassis	2–48
2–37	Power Supply Control Chassis	2–49
2–38	Variable Power Transformer Schematic	2–51
2–39	Servo Amplifier Chassis	2–52
2–40	Servo Amplifier Thyratron Grid Circuit	2–54
2–41	Synchro Circuits	2–56
2–42	Antenna RF Feed System	2–58
2–43	Antenna Radiation Patterns	2–59
2–44	IFF Antenna System	2–60
2–45	IFF Antenna Dipole and Reflector	2–61
2–46	IFF Antenna Reflector Arrangement	2–61
2–47	Voltage Standing-Wave Ratio Curve	2–62
	SECTION 3 — INSTALLATION	
3–1	Equipment Assembly Details	3–1, 3–2
3–2	Use of Tower Assembly Tool	3–4
3–3	Case CY-1060/TPS-1D Details	3–5
3–4	Hoisting Arrangement for Erecting Units	3–5
3–5	Case CY-2071/TPS-1G Details	3–6
3–6	Case CY-2072/TPS-1G Details	3–7
3–7	Stacking Bottom Units	3–8
3–8	Erecting Gin Pole	3–9
3–9	Setting Power Supply in Place	3–10
3–10	Antenna Details	3–10
3–11	IFF Antenna Connections	3–10
3–12	Antenna Base Details	3–11

Figure	Title	Page
	SECTION 3 — INSTALLATION (Cont'd)	
3–13	Antenna Spindle	3–11
3–14	Guy Cable Accessories	3–12
3–15	RF Coaxial Fittings and Cables	3–13
3–16	Servo Amplifier Ventilation Covers	3–13
3–17	Local Oscillator Assembly Securing Screw Location	3–14
3–18	System Cables and Plugs	3–15
3–19	Antenna Base Coaxial Line Support	3–18
3–20	Azimuth and Range Indicator Removed From Case	3–19
3–21	RPPI and IFF Trigger Circuit Terminating Resistor	3–20
3–22	Heater Power Link Connections	3–20
3–23	Radar Modulator MD-144A/TPS-1D: Outline Drawing	3–25
3–24	Radar Receiver-Transmitter RT-212A/TPS-1D: Outline Drawing	3–27
3–25	Signal Comparator CM-36A/TPS-1D: Outline Drawing	3–29
3–26	Power Supply PP-674A/TPS-1D: Outline Drawing	3–31
3–27	Antenna Base AB-498/TPS-1G: Outline Drawing	3–33
3–28	Azimuth and Range Indicator IP-141A/TPS-1D: Outline Drawing	3–35
3–29	Antenna AS-673/TPS-1E: Outline Drawing	3–37
3–30	Case CY-1060/TPS-1D and Case CY-1297/TPS-1D: Outline Drawing	3–39
3–31	Case CY-2071/TPS-1G: Outline Drawing	3–41
3–32	Case CY-2078/TPS-1G: Outline Drawing	3–43
3–33	Case CY-2072/TPS-1G: Outline Drawing	3–45
3–34	Variable Power Transformer TF-238/U: Outline Drawing	3–47
3–35	Tuned Cavity TS-172B/UP: Outline Drawing	3–49
3–36	Signal Comparator Test Set TS-1002/TPS-1G: Outline Drawing	3–51
	SECTION 4 — OPERATION	
4–1	Power Supply Panel Details	4–5
4–2	Indicator Panel Controls	4–6
4–3	Modulator Panel Controls	4–7
4–4	Receiver-Transmitter Panel Controls	4–8
4–5	Signal Comparator Panel Adjustments	4–10
4–6	Normal A-Scope Presentation	4–11
4–7	A-Scope Presentation Showing Balance Misadjustments	4–11

LIST OF ILLUSTRATIONS (Cont'd)

Figure	Title	Page
	SECTION 4 — OPERATION (Cont'd)	
4–8	Use of Amber Filter with Cursor Line	4–12
4–9	A-Scope Presentation Showing Appearance of Echo Box Signal with Operation Selector on Normal Video	4–14
4–10	Signal Comparator Internal Adjustments	4–15
4–11	A-Scope Presentation with MTI Showing Various Conditions of Coho Adjustment With Operation Selector on Coho Adjust	4–16
4–12	Comparison of PPI Scope Signals With and Without MTI	4–18
4–13	A-Scope Presentation Showing Misadjustment of 2500-Microsecond Gate	4–19
4–14	A-Scope Presentation Showing Range Gate Balance Adjustment	4–20
4–15	Transmitter Overtemperature Reset Button	4–22
	SECTION 5 — OPERATOR'S MAINTENANCE	
5–1	Power Supply Fuses	5–4
5–2	Power Supply System and Heater Fuses	5–5
5–3	Radar Modulator Tube Locations (Rear of Chassis)	5–9
5–4	Radar Modulator Tube Locations (Top Side)	5–9
5–5	Radar Modulator Trigger Chassis Tube Locations	5–9
5–6	Azimuth and Range Indicator Tube Locations (Left Side)	5–10
5–7	Azimuth and Range Indicator Tube Locations (Right Side)	5–10
5–8	Azimuth and Range Indicator Tube Locations (Bottom Side)	5–10
5–9	Azimuth and Range Indicator Tube Locations (Top Side)	5–11
5–10	Azimuth and Range Indicator High-Voltage Rectifier Location	5–11
5–11	Signal Comparator Tube Locations	5–12
5–12	Power Supply Tube Locations	5–13
5–13	Radar Receiver-Transmitter Tube Locations (Bottom Side)	5–14
5–14	Radar Receiver-Transmitter (Top Side): Location of Keep-Alive Rectifier Tube	5–15
5–15	Servo Amplifier Tube Locations	5–15
5–16	Azimuth and Range Indicator Scope Tube Replacement	5–15
5–17	Chassis Catch and Catch Release	5–16
	SECTION 6 — PREVENTIVE MAINTENANCE	
6–1	Panel Air Filter Arrangement	6–1
6–2	Case Filter Replacement	6–4
6–3	Servo Amplifier Air Filter and Screen	6–4
6–4	Case Pressure Relief Valve and Air Filter	6–5
6–5	Receiver Crystal and Special Tube Replacement	6–7
6–6	Local Oscillator Tube Replacement	6–7
6–7	Magnetron Replacement	6–8
6–8	Magnetron Output Connector	6–9
6–9	Cavities Assembly Tube Replacement	6–10
6–10	Access to Bottom of Receiver-Transmitter	6–11
6–11	Signal Mixer Crystal Replacement	6–12
6–12	Coho Mixer Crystal Replacement	6–13
	SECTION 7 — CORRECTIVE MAINTENANCE	
7–1	Radar Modulator Details (Right Side)	7–2
7–2	Indicator Interlock	7–2
7–3	Signal Comparator Interlock	7–4
7–4	Power Supply Shorting Switch	7–5
7–5	Receiver-Transmitter Interlock and Warning Light	7–5
7–6	Receiver-Transmitter Warning Light (Bottom of Chassis)	7–6
7–7	Servo Amplifier Interlock	7–6
7–8	Antenna Base Safety Switch	7–7
7–9	Coaxial Adapter	7–7
7–10	Trigger Chassis (Removed from Modulator for Checking)	7–8
7–11	Modulator High-Voltage Transformer Primary Taps	7–9
7–12	Modulator Voltage and Resistance Measurements	7–12
7–13	Modulator Component Locations (Top Right)	7–13
7–14	Modulator Component Locations (Top Side)	7–14
7–15	Modulator Component Locations (Rear)	7–20
7–16	Modulator Component Locations (Lower Left)	7–21
7–17	Modulator Component Locations (Lower Front)	7–23
7–18	Modulator Component Locations (Lower Right)	7–24
7–19	Trigger Chassis Component Locations (Top Side)	7–25
7–20	Trigger Chassis Component Locations (Bottom Side)	7–26

LIST OF ILLUSTRATIONS (Cont'd)

Figure	Title	Page
SECTION 7 — CORRECTIVE MAINTENANCE (Cont'd)		
7–21	Indicator Panel Screwdriver Adjustments	7–27
7–22	Indicator Adjustments and Test Points (Bottom Side)	7–29
7–23	Indicator Adjustments and Test Points (Top Side)	7–31
7–24	Indicator Panel Component Locations	7–32
7–25	Indicator Component Locations (Rear)	7–33
7–26	Indicator Component Locations (Top Side)	7–34
7–27	Indicator Component Locations (Right Side)	7–35
7–28	Indicator Component Locations (Bottom Side)	7–38
7–29	Indicator Component Locations (Left Side)	7–39
7–30	Indicator Component Locations (PPI Yoke)	7–40
7–31	Indicator Component Locations (Bottom Mid-frame)	7–41
7–32	Antenna Rotation Control Mechanism (Front)	7–42
7–33	Antenna Rotation Control Mechanism (Rear)	7–43
7–34	Indicator Voltage and Resistance Measurements	7–45
7–35	Indicator Voltage and Resistance Measurements	7–46
7–36	Signal Comparator Adjustments	7–47
7–37	Carrier Gate Measurement	7–48
7–38	Special Adapter and Test Lead	7–48
7–39	Alignment Patterns for 9- and 60-mc Amplifiers	7–48
7–40	Delay Network Connections	7–49
7–41	Delay Network Case Details	7–51
7–42	Delay Network Test Attenuator Connections	7–52
7–43	Signal Comparator Voltage and Resistance Measurements (Main Chassis)	7–53
7–44	Signal Comparator Voltage and Resistance Measurements (60-mc Amplifier)	7–56
7–45	Signal Comparator Voltage and Resistance Measurements (Coherent Oscillator)	7–57
SECTION 7 — CORRECTIVE MAINTENANCE (Cont'd)		
7–46	Signal Comparator Voltage and Resistance Measurements (Delay Amplifier)	7–58
7–47	Signal Comparator Voltage and Resistance Measurements (Non-delay Amplifier)	7–59
7–48	Signal Comparator Component Locations (Top Side of Chassis)	7–62
7–49	Signal Comparator Component Locations (Subchassis)	7–63
7–50	Signal Comparator Component Locations (R.R. Trigger Amplifier)	7–64
7–51	Signal Comparator Component Locations (R. R. Trigger Amplifier)	7–65
7–52	Signal Comparator Component Locations (Video Balancer and Amplifier)	7–66
7–53	Signal Comparator Component Locations (Video Balancer and Amplifier)	7–67
7–54	Signal Comparator Component Locations (Chassis Inverted)	7–68
7–55	Signal Comparator Component Locations (MTI Gate Generator)	7–69
7–56	Power Supply Component Locations (Rectifier Tubes Removed)	7–70
7–57	Power Supply Control Chassis	7–71
7–58	Power Supply Voltage Adjustments	7–73
7–59	Power Supply Timing Relay Adjustment	7–75
7–60	Power Supply Voltage and Resistance Measurements	7–77
7–61	Power Supply Component Locations (Top Side)	7–79
7–62	Power Supply Component Locations (Bottom Side)	7–80
7–63	Power Supply Component Locations (Rear)	7–81
7–64	Power Supply Component Locations	7–82
7–65	Receiver-Transmitter Adjustments	7–83
7–66	Mixer Simulator and Special Coaxial Lead	7–84
7–67	60-Mc IF Preamplifier Test Connections	7–84
7–68	60-Mc IF Preamplifier Alignment Pattern	7–85
7–69	Variac Connections for Aging Magnetron	7–85

LIST OF ILLUSTRATIONS (Cont'd)

Figure	Title	Page
	SECTION 7 — CORRECTIVE MAINTENANCE (Cont'd)	
7–70	Coaxial Adapter Connections	7–86
7–71	Directional Coupler Output Characteristic	7–87
7–72	Test Equipment Arrangement for Measuring VSWR	7–88
7–73	Receiver-Transmitter Voltage and Resistance Measurements	7–89
7–74	Receiver-Transmitter Component Locations (Top Right)	7–90
7–75	Receiver-Transmitter Component Locations (Top Left)	7–91
7–76	Receiver-Transmitter Component Locations (Right Side)	7–92
7–77	Receiver-Transmitter Component Locations	7–93
7–78	Receiver-Transmitter Component Locations (Bottom Side)	7–95
7–79	Local Oscillator and Control Assembly Component Locations	7–96
7–80	Coho Preamplifier Component Locations	7–97
7–81	IF Preamplifier Component Locations	7–98
7–82	Servo Amplifier Component Locations (Bottom Side)	7–99
7–83	Antenna Drive Motor Assembly Component Locations	7–100
7–84	Servo Amplifier Voltage and Resistance Measurements	7–101
7–85	Servo Amplifier Component Locations (Top Side)	7–102
7–86	Servo Amplifier Case Component Locations	7–103
7–87	Antenna Base Component Locations	7–104
7–88	Antenna Base Component Locations	7–105
7–89	Rotary Joint Details	7–106
7–90	Exploded View of Drive Motor Subassembly	7–109
7–91	Modulator Practical Wiring Diagram	7–111
7–92	Indicator Practical Wiring Diagram (Upper Half of Rear Subchassis)	7–113
7–93	Indicator Practical Wiring Diagram (Lower Half of Rear Subchassis)	7–115
	SECTION 7 — CORRECTIVE MAINTENANCE (Cont'd)	
7–94	Indicator Practical Wiring Diagram (Panel and Mid-frame)	7–117
7–95	Signal Comparator Practical Wiring Diagram (Main Chassis)	7–119
7–96	Signal Comparator Practical Wiring Diagram (Subchassis)	7–121
7–97	Signal Comparator Test Set Practical Wiring Diagram	7–123
7–98	Power Supply Practical Wiring Diagram (Bottom View)	7–125
7–99	Power Supply Practical Wiring Diagram (Control Subchassis)	7–127
7–100	Power Supply Practical Wiring Diagram (Front Panel)	7–129
7–101	Variable Power Transformer Practical Wiring Diagram	7–131
7–102	Receiver-Transmitter Practical Wiring Diagram (Main Chassis)	7–133
7–103	Coho Preamplifier Practical Wiring Diagram	7–135
7–104	Local Oscillator and Control Assembly Practical Wiring Diagram	7–137
7–105	Antenna Base Practical Wiring Diagram (Servo Amplifier)	7–139
7–106	Antenna Base Practical Wiring Diagram (Drive Motor)	7–141
7–107	Servicing Block Diagram	7–143
7–108	External Cabling	7–145
7–109	Primary Power and DC Control Circuits	7–147
7–110	Synchro Diagram	7–151
7–111	Radar Modulator Schematic	7–153
7–112	Azimuth and Range Indicator Schematic	7–155
7–113	Signal Comparator Schematic	7–157
7–114	Signal Comparator Test Set Schematic	7–161
7–115	Power Supply Schematic	7–163
7–116	Variable Power Transformer Schematic	7–167
7–117	Radar Receiver-Transmitter Schematic	7–169
7–118	Antenna Base Schematic	7–171

LIST OF TABLES

Table *Page*

SECTION 1 — GENERAL DESCRIPTION

1–1 Equipment Supplied 1–14
1–2 Equipment Required but not Supplied 1–15
1–3 Shipping Data 1–16
1–4 Electron Tube Complement 1–18
1–5 Semi-Conductor Device Complement .. 1–18
1–6 Reference Data 1–19
1–7 Interconnecting Cables 1–20

SECTION 4 — OPERATION

4–1 Operating Control Functions 4–3

SECTION 5 — OPERATOR'S MAINTENANCE

5–1 Routine Check Chart 5–2
5–2 Tube Functions 5–7

SECTION 6 — PREVENTIVE MAINTENANCE

6–1 Routine Check Chart 6–2
6–2 Tube and Crystal Replacement Schedule 6–6
6–3 Spare Tube Test Chart 6–14
6–4 Lubrication Chart 6–16

Table *Page*

SECTION 7 — CORRECTIVE MAINTENANCE

7–1 Filament Power Data 7–3
7–2 Recommended Test Equipment and Usages 7–10
7–3 System Trouble-Shooting Guide 7–16
7–4 Transmitter Trouble-Shooting Guide .. 7–17
7–5 Signal Comparator Trouble-Shooting Guide 7–18
7–6 A and PPI Scope Trouble-Shooting Guide 7–19

SECTION 8 — MAINTENANCE PARTS LIST

Introduction 8–1
8–1 List of Major Units 8–2
8–2 List of Major Units by Colloquial Name 8–2
8–3 Maintenance Parts List 8–3
8–4 Stock Number Identification 8–256
8–5 Stock Number Cross Reference 8–288
8–6 List of Manufacturers 8–305

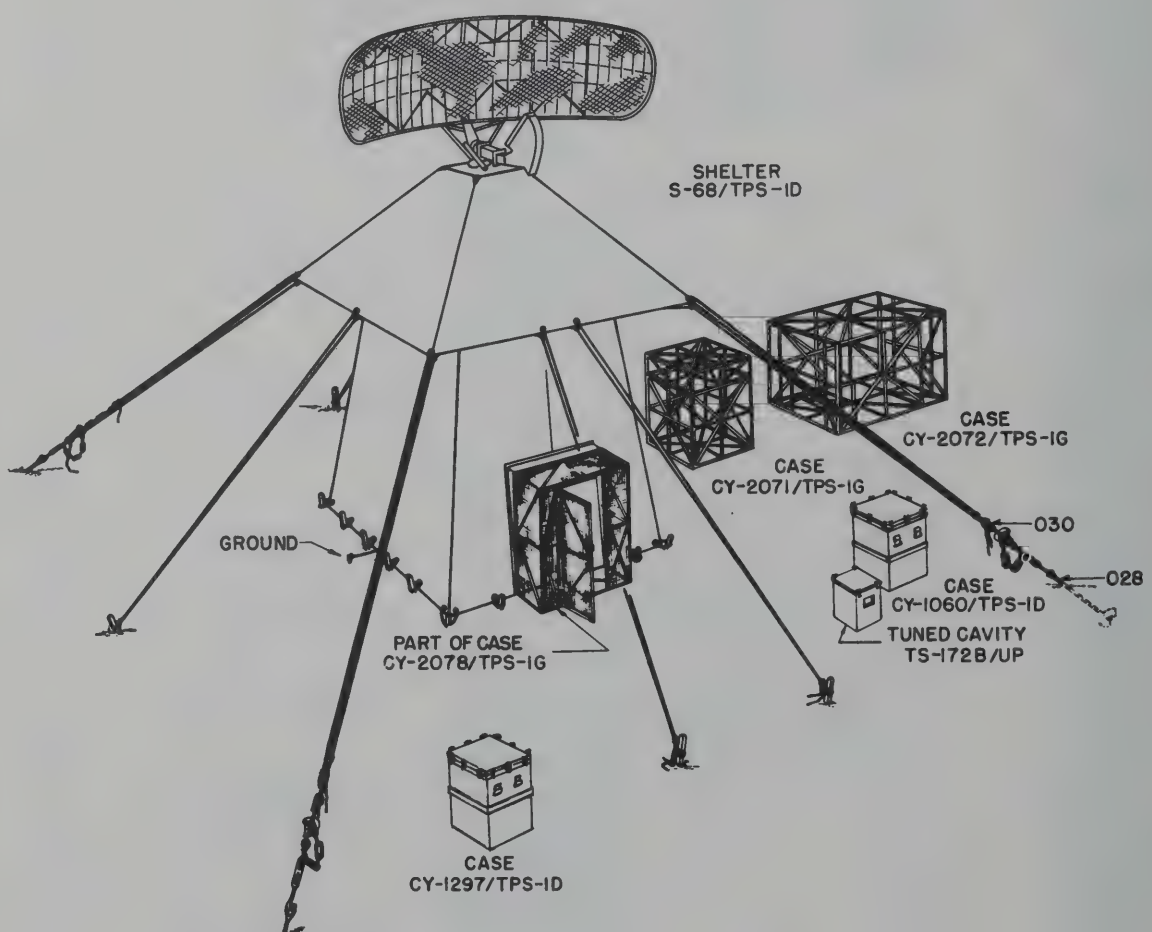

Figure 1—1. Complete Radio Set AN/TPS-1G

SECTION 1
GENERAL DESCRIPTION

1. GENERAL DESCRIPTION.

(See figure 1–1.)

Radio Set AN/TPS-1G is a high-power transportable air search radar equipment for use in detecting aircraft and other objects at ranges up to 160 nautical miles. It is designed for ground-base operation either in the field or at a fixed position.

The equipment consists of seven spray-proof main units, six of which may be stacked to form a tower which serves as the supporting structure for the antenna. Interconnection of units is accomplished by cables and connectors. The size, shape, and weight of each unit are such that the equipment can easily be loaded into an air or ground carrier and later manually transported to the operating site, not more than four men being required to handle any one unit. A tent, which is supplied with equipments intended for field use, encloses all the units except the antenna so as to form a shelter for the operator and equipment. It is possible to prepare the equipment for full operation within 2 hours from the start of assembly.

Alternate methods of assembling the equipment are available to meet special situations that arise, usually for installations at a fixed position. These alternate methods make use of the following features, which may be employed singly or in combination: (1) The antenna and antenna-base units may be installed remotely up to a distance of 150 feet; (2) The indicator, which includes the basic operating controls for the equipment, may be installed at a separate operating position up to 50 feet from the other units; (3) The individual units of the equipment may be arranged as desired (instead of being stacked), if an independent support is provided for the antenna base and antenna.

In operation, Radio Set AN/TPS-1G is similar to most search radar equipments that consist in general of a modulator, transmitter-receiver, rotating antenna, and indicator. PPI and A-scope presentations at the indicator unit provide azimuth and range information.

Connections are provided for operating a repeater PPI (RPPI) display, which is not, however, included in the AN/TPS-1G equipment. The AN/TPS-1G departs from typical search-radar design in featuring an MTI (moving-target-indication) system. When the MTI circuits are operating, the clutter of fixed objects is effectively removed from the radar indicators, thus aiding in the detection of moving objects. The particular type of MTI action provided in AN/TPS-1G is known as "gated MTI," in which the equipment operates as an MTI radar with respect to nearby targets and as normal radar for more distant ones. The transition point between the normal-radar and the MTI actions can be set by the operator at any range between 0 and the full range of the equipment (160 nautical miles).

The power requirement for full operation of the AN/TPS-1G is approximately 7500 watts at 115 volts, 400 cycles, which includes 2.5kw for heaters. Separate primary circuits are used for the operating system and for the space heaters and blowers. Filters are included in the supply leads (dc and ac) to all units to minimize conducted noise.

The ambient temperature ratings covering the entire equipment are −65° to 135°F for operation and −65° to 165°F for storage, at relative humidities up to 95%.

Each unit is mounted in a frame whose horizontal cross section measures 23.25 in. deep x 24 in. wide. When the units are stacked for field use, the height of the tower thus formed measures 14.4 ft to the base of the antenna unit. The antenna adds 8 ft to make an over-all height of 22.4 ft. Four guy wires, attached to the tower near the base of the antenna, anchor the structure to the ground.

The arrangement of units, starting from the ground up, is as follows:

(a) Mounting MT-960/TPS-1D
(b) Radar Modulator MD-144A/TPS-1D
(c) Azimuth and Range Indicator IP-141A/TPS-1D
(d) Signal Comparator CM-36A/TPS-1D
(e) Power Supply PP-674A/TPS-1D
(f) Radar Receiver-Transmitter RT-212A/TPS-1D
(g) Antenna Base AB-498/TPS-1G
(h) Antenna AS-673/TPS-1E

The six units above the mounting have control panels and are contained in cases permanently attached to their unit frames. Covers with gaskets attached seal these units for protection during transport. The corner posts of each frame contain a socket or pin so arranged that the units can be assembled only in the correct order. Captive pins, inserted through the socket and pin joints, lock the frames together. The chassis of cased units can be three-quarters withdrawn to a stop position or completely removed for servicing.

All units are designed to withstand the shock and vibration encountered in transport. All units except the antenna base are provided with four hinged handgrabs arranged for either a two- or four-man carry.

2. DESCRIPTION OF UNITS.

a. MOUNTING MT-960/TPS-1D. *(See figure 1–2.)* Mounting MT-960/TPS-1D is used for the base of

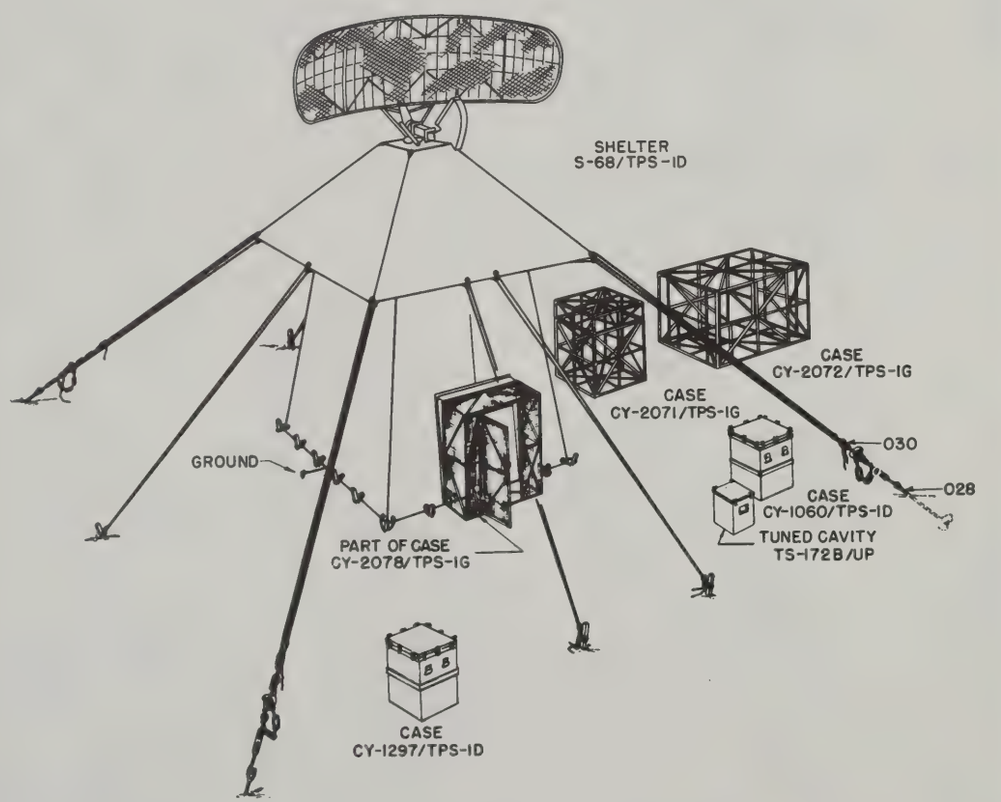

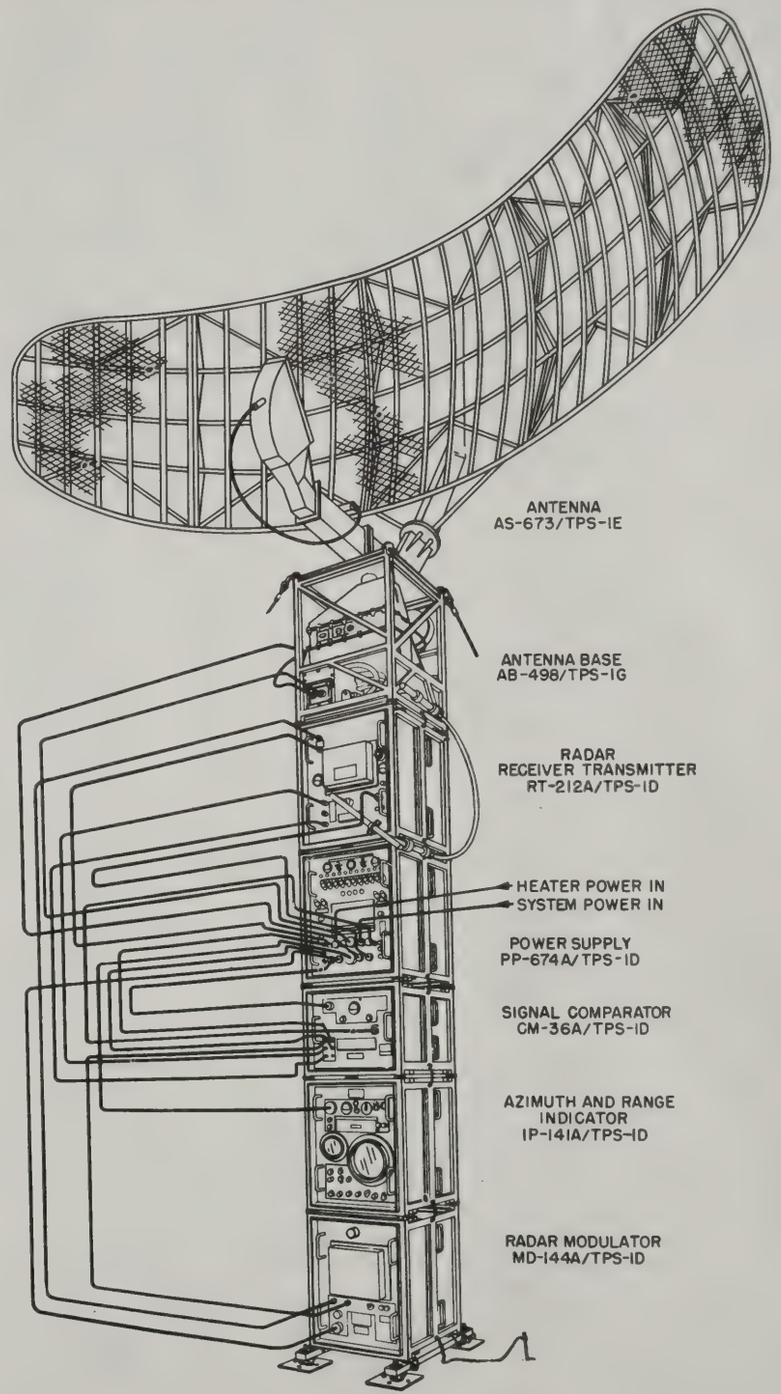

Figure 1—1. Complete Radio Set AN/TPS-1G

SECTION 1
GENERAL DESCRIPTION

1. GENERAL DESCRIPTION.

(See figure 1–1.)

Radio Set AN/TPS-1G is a high-power transportable air search radar equipment for use in detecting aircraft and other objects at ranges up to 160 nautical miles. It is designed for ground-base operation either in the field or at a fixed position.

The equipment consists of seven spray-proof main units, six of which may be stacked to form a tower which serves as the supporting structure for the antenna. Interconnection of units is accomplished by cables and connectors. The size, shape, and weight of each unit are such that the equipment can easily be loaded into an air or ground carrier and later manually transported to the operating site, not more than four men being required to handle any one unit. A tent, which is supplied with equipments intended for field use, encloses all the units except the antenna so as to form a shelter for the operator and equipment. It is possible to prepare the equipment for full operation within 2 hours from the start of assembly.

Alternate methods of assembling the equipment are available to meet special situations that arise, usually for installations at a fixed position. These alternate methods make use of the following features, which may be employed singly or in combination: (1) The antenna and antenna-base units may be installed remotely up to a distance of 150 feet; (2) The indicator, which includes the basic operating controls for the equipment, may be installed at a separate operating position up to 50 feet from the other units; (3) The individual units of the equipment may be arranged as desired (instead of being stacked), if an independent support is provided for the antenna base and antenna.

In operation, Radio Set AN/TPS-1G is similar to most search radar equipments that consist in general of a modulator, transmitter-receiver, rotating antenna, and indicator. PPI and A-scope presentations at the indicator unit provide azimuth and range information.

Connections are provided for operating a repeater PPI (RPPI) display, which is not, however, included in the AN/TPS-1G equipment. The AN/TPS-1G departs from typical search-radar design in featuring an MTI (moving-target-indication) system. When the MTI circuits are operating, the clutter of fixed objects is effectively removed from the radar indicators, thus aiding in the detection of moving objects. The particular type of MTI action provided in AN/TPS-1G is known as "gated MTI," in which the equipment operates as an MTI radar with respect to nearby targets and as normal radar for more distant ones. The transition point between the normal-radar and the MTI actions can be set by the operator at any range between 0 and the full range of the equipment (160 nautical miles).

The power requirement for full operation of the AN/TPS-1G is approximately 7500 watts at 115 volts, 400 cycles, which includes 2.5kw for heaters. Separate primary circuits are used for the operating system and for the space heaters and blowers. Filters are included in the supply leads (dc and ac) to all units to minimize conducted noise.

The ambient temperature ratings covering the entire equipment are −65° to 135°F for operation and −65° to 165°F for storage, at relative humidities up to 95%.

Each unit is mounted in a frame whose horizontal cross section measures 23.25 in. deep x 24 in. wide. When the units are stacked for field use, the height of the tower thus formed measures 14.4 ft to the base of the antenna unit. The antenna adds 8 ft to make an over-all height of 22.4 ft. Four guy wires, attached to the tower near the base of the antenna, anchor the structure to the ground.

The arrangement of units, starting from the ground up, is as follows:

(a) Mounting MT-960/TPS-1D
(b) Radar Modulator MD-144A/TPS-1D
(c) Azimuth and Range Indicator IP-141A/TPS-1D
(d) Signal Comparator CM-36A/TPS-1D
(e) Power Supply PP-674A/TPS-1D
(f) Radar Receiver-Transmitter RT-212A/TPS-1D
(g) Antenna Base AB-498/TPS-1G
(h) Antenna AS-673/TPS-1E

The six units above the mounting have control panels and are contained in cases permanently attached to their unit frames. Covers with gaskets attached seal these units for protection during transport. The corner posts of each frame contain a socket or pin so arranged that the units can be assembled only in the correct order. Captive pins, inserted through the socket and pin joints, lock the frames together. The chassis of cased units can be three-quarters withdrawn to a stop position or completely removed for servicing.

All units are designed to withstand the shock and vibration encountered in transport. All units except the antenna base are provided with four hinged handgrabs arranged for either a two- or four-man carry.

2. DESCRIPTION OF UNITS.

a. MOUNTING MT-960/TPS-1D. *(See figure 1–2.)* Mounting MT-960/TPS-1D is used for the base of

the tower structure on field installations or for the base of Antenna Base AB-498/TPS-1G and Antenna AS-673/TPS-1E on remote antenna installations.

The mounting consists of two rails with a foundation pad or foot fastened to each end of the rails. The pads have mounting holes for attachment to a more substantial base where required. Each rail has two socket fittings that accept the four base pins of the radar modulator or the antenna base unit. The socket fittings are adjustable for use in leveling.

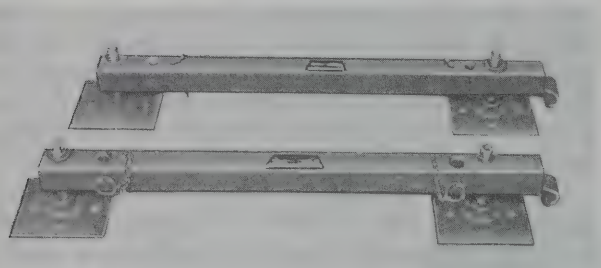

Figure 1—2. Mounting MT-960/TPS-1D (2 shown)

b. RADAR MODULATOR MD-144A/TPS-1D. *(See figure 1—3.)*

Radar Modulator MD-144A/TPS-1D is 29 in. high and weighs 347 lbs. The front panel contains six cable fittings, two controls, two switches and nameplates showing the waveforms at various test points within the unit.

The circuits of the modulator consist of a trigger generator, modulator, and modulator high-voltage power supply. The unit also includes a variac and a control switch for performing the magnetron-aging operation.

Eleven tubes are employed, only five of which are receiving types. A heater and a blower, thermostatically operated, are included within the unit to maintain safe operating temperatures over the required ambient temperature range. The heat dissipation of the unit is 800 watts.

c. AZIMUTH AND RANGE INDICATOR IP-141A/TPS-1D. *(See figure 1—4.)*

Indicator IP-141A/TPS-1D is 29 in. high and weighs 224 lbs. The chassis is contained in a slashproof inner case which is mounted in the normal tower frame case. Thus it is possible to remove the unit with its inner case to permit remote operation of the indicator up to a distance of 50 ft. A 50-ft extension cable is supplied.

The front panel includes the PPI and A-scope screens, all of the necessary controls for operation of the system, a meter for circuit adjustment, one cable fitting, a phone jack, and a power receptacle. A hinged cover also located on the panel provides access to basic adjustments of internal circuits. Viewing hoods are provided for the PPI and A-scope screens.

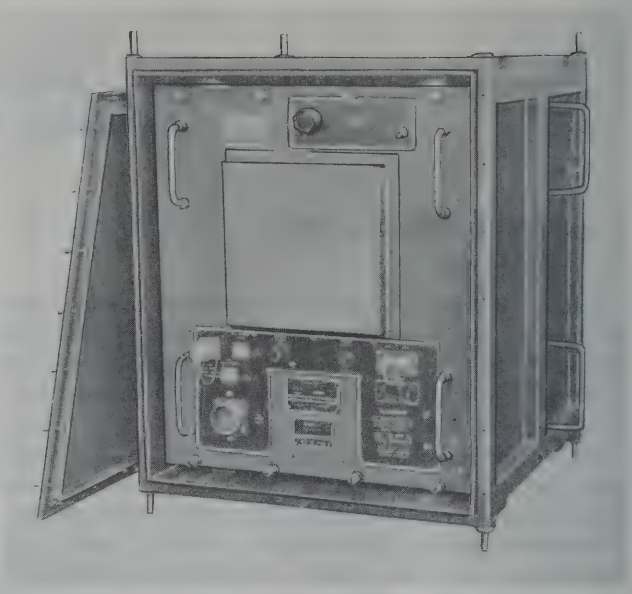

Figure 1—3. Radar Modulator MD-144A/TPS-1D

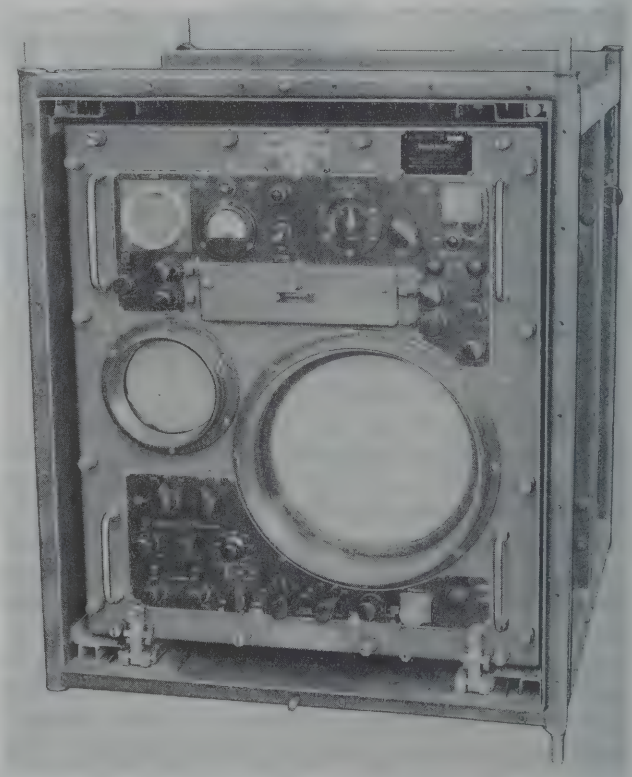

Figure 1—4. Azimuth and Range Indicator IP-141A/TPS-1D

Approximately 150 watts are dissipated by circuits of this unit. Safe operating temperature over the required ambient temperature range is maintained by a thermostatically controlled blower and heater.

A single-stage IFF video amplifier (V601) is provided in the indicator unit for mixing IFF and radar video signals (prior to presentation), and includes a video gain control for initial setting of the IFF video level. The IFF video circuit makes connection to the IFF equipment through a UG-58A/U receptacle (J417), located on the panel of the power supply unit. The interconnecting cable and plug fitting are not supplied.

d. SIGNAL COMPARATOR CM-36A/TPS-1D. *(See figure 1–5.)*

Signal Comparator CM-36A/TPS-1D is 20 in. high and weighs 146 lbs. The front panel contains a test meter, two selector switches, a test point, and seven cable fittings. A hinged cover provides access to panel controls required for basic adjustments.

The circuits of the unit consist of a 60-Mc amplifier, non-delay amplifier, delay amplifier, pulse delay network, MTI repetition rate trigger amplifier, MTI gate generator (for gated-MTI operation) and video balancer and amplifier. The 60-Mc amplifier and video amplifier are the only sections required for normal radar operation; the remaining sections function entirely for MTI. The unit employs a total of 46 tubes.

Approximately 210 watts are dissipated in the circuits of this unit. A temperature-controlled space heater and blower is provided.

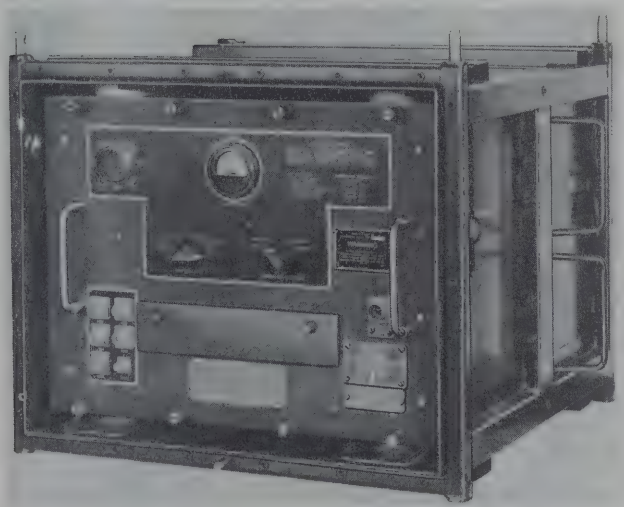

Figure 1–5. Signal Comparator CM-36A/TPS-1D

e. POWER SUPPLY PP-674A/TPS-1D. *(See figure 1–6.)*

Power Supply PP-674A/TPS-1D is 29 in. high and weighs approximately 223 lbs. As this unit contains interunit connecting circuits, 19 cable fittings appear on the front panel. The more functional panel components include line voltage, line frequency, and elapsed time meters, all of the system fuses with blown-fuse indicators, and a switch for operating the blower in the antenna. A hinged panel plate covers the relatively large line fuses.

Primary power is applied to this unit for direct use and also for distribution to other units. All of the system positive and negative d-c potentials up to 450 volts are developed in this unit from the primary power. The unit also houses the control chassis which contains timing and control circuit relays.

The power supply unit also supplies 115-volt 400-cycle power for use by the IFF equipment. Connection to the IFF unit is made through J411 (on the front panel of the power supply unit) through a 2-circuit cable and plug. The connector plug (AN3106A-20-6S) which mates with J411 is supplied in Case CY-1060/TPS-1D.

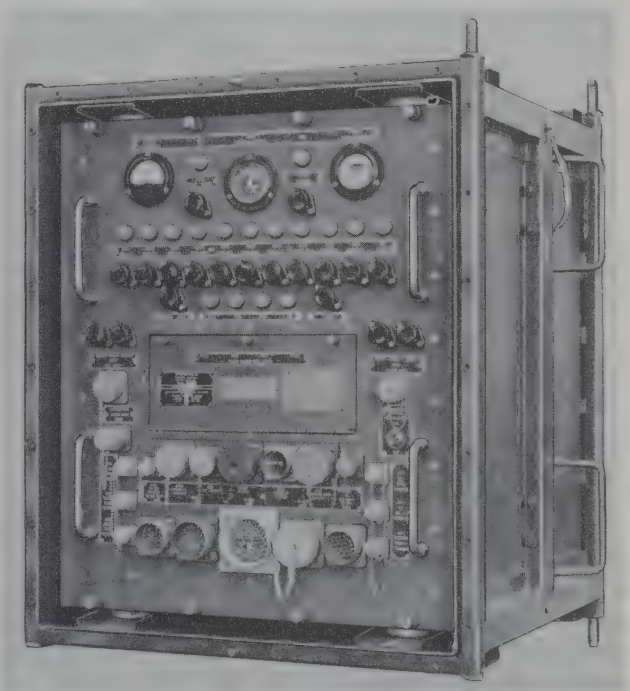

Figure 1–6. Power Supply PP-674A/TPS-1D

f. RADAR RECEIVER-TRANSMITTER RT-212A/TPS-1D. *(See figure 1–7.)*

Radar Receiver-Transmitter RT-212A/TPS-1D is 29 in. high and weighs approximately 330 lbs. The seven front-panel cable fittings include the RF output coaxial fitting. A magnetron frequency control, two meters, and meter selector switch complete the front-panel components.

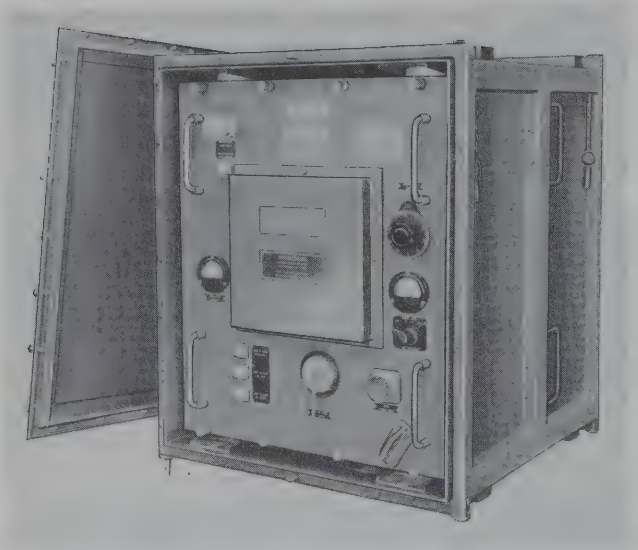

Figure 1—7. Radar Receiver-Transmitter RT-212A/TPS-1D

The main circuits of the receiver-transmitter are as follows:

Transmitter (includes magnetron, magnetron filament, and keep-alive d-c supplies)

RF system (includes duplexing system)

Local oscillator and control circuit assembly (subassembly)

IF preamplifier (subassembly)

Coho preamplifier (subassembly)

This unit also supplies positive triggers, having a pulse width of 2.0 microseconds and a nominal amplitude of 40 volts, for synchronizing IFF operation with that of the AN/TPS-1G. A type UG-58A/U receptacle (J418), mounted on the panel of the power supply unit, provides a connecting point for the sync cable which connects to the IFF equipment. The IFF equipment can be triggered earlier when it is desired to have the IFF response appear super-imposed with the radar echoes. When this is desired, receptacle J157, mounted on the front panel of the modulator unit, is used instead of J418 for the IFF sync cable. The trigger cable and cable fittings are not supplied.

Ten tubes are required to perform the functions of the unit, five of these tubes being receiving-type tubes. The heat dissipated by the unit is approximately 1300 watts. Thermostatically controlled space heaters are used within the transmitter and also within the unit case to provide accessory heating below 32°F.

g. ANTENNA BASE AB-498/TPS-1G. *(See figure 1—8.)*

Antenna Base AB-498/TPS-1G, which includes the antenna servo amplifier and antenna drive assemblies, is 33-3/4 in. high and weighs 347 lbs. The corner-post pin arrangement of this tower section fits the equipment mounting base so that the unit with the antenna attached can be mounted separately, distances up to 150 ft being permissible.

The servo amplifier is mounted in the lower part of the unit, with the drive assembly positioned directly above. A rotatable shaft, containing two coaxial feedlines and a flange mounting for the antenna, extends through the top of the unit. There are a total of eight cable fittings used throughout the unit, two fittings being used for interassembly connections. One of two coaxial cable fittings makes connection to the antenna. The antenna drive assembly has an external phone jack, a utility power receptacle, and a safety switch.

The servo amplifier controls the rotation speed of the antenna and utilizes six tubes, two of these being

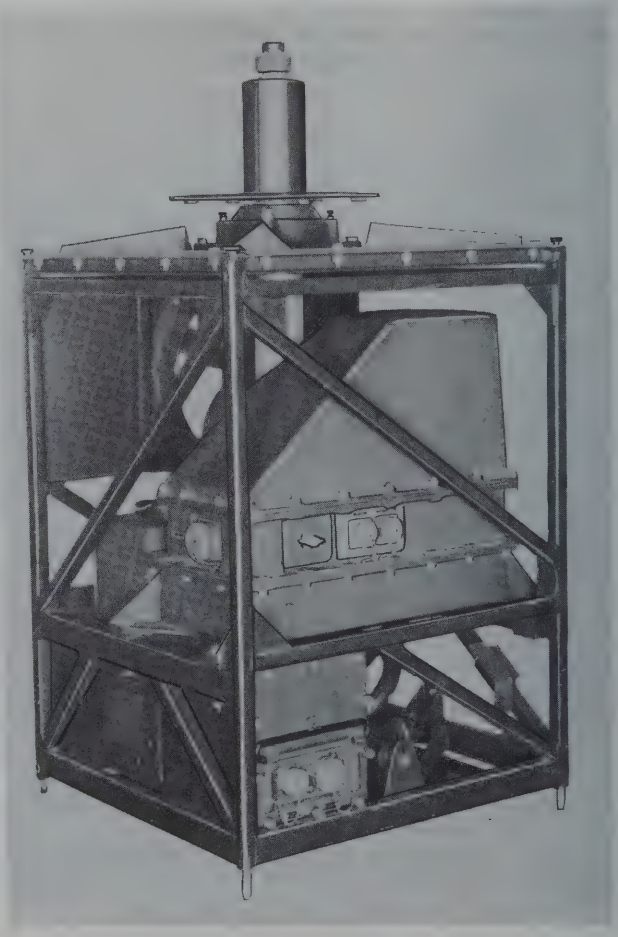

Figure 1—8. Antenna Base AB-498/TPS-1G

gaseous control tubes. Five control relays and a dry-disk rectifier are also part of this assembly.

The antenna drive unit contains the antenna drive motor, two synchro generators and a blower assembly for tent ventilation. Rotary coaxial joints and an RF transmission line for the antenna are included in the antenna drive assembly.

The servo amplifier case in the antenna base has a thermostatically controlled heater. Two blowers in the servo amplifier, one thermostatically controlled, provide cooling. A portion of the exhaust air from the servo amplifier is forced through the coaxial line to the antenna to reduce the accumulation of moisture.

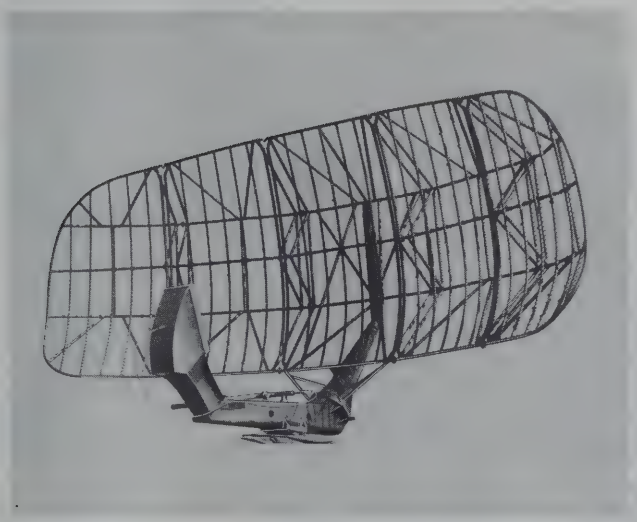

Figure 1—9. Antenna AS-673/TPS-1E

b. ANTENNA AS-673/TPS-1E. *(See figure 1—9.)*

Antenna AS-673/TPS-1E weighs approximately 260 lbs and has an over-all height of approximately 95 in. The unit mounts on the flanged post extending through the top of the antenna base unit. The reflector is 74 in. high by approximately 15.7 ft wide, the swing circle being 15.7 ft in diameter. It is made up of five sections, the center section consisting of a waveguide nozzle, a reflector support, and an RF transmission line. The reflector is knocked down for transport and must be reassembled before installation.

The RF feed system consists of two coaxial lines, one inside the other, the outer line being the antenna feedline. The radar coaxial line connects into a short section of waveguide to which is attached the primary radiator, a waveguide nozzle.

The IFF antenna is incorporated in the primary radiator nozzle assembly of Antenna AS-673/TPS-1E. It consists of a dipole radiator and five reflector rods. The dipole and the reflector rods are protected from the weather by a plastic nozzle cover. RF feed to the dipole antenna is made through a coaxial connector and a rigid coaxial line which supports the dipole. The antenna is capable of handling a maximum of 5 kw peak power.

The IFF antenna feed system consists of a coaxial line which includes an input coaxial fitting (mating a type UG-59A/U plug), a rigid coaxial cable, and a five foot length of RG-9A/U cable with UG-59A/U fittings (W850). The rigid coaxial cable is incorporated in the search radar feed system of the antenna base unit and includes a rotary joint. The flexible cable makes connection between the rigid cable and the IFF antenna. The feed system is capable of handling a peak power of 5 kw maximum.

i. CABLES, PLUGS, AND RF CONNECTORS. *(See figures 1—10 and 1—11.)*

Note

Some of the cables illustrated in figures 1—10 and 1—11 are not supplied with all equipments. For details, see table 1—6.

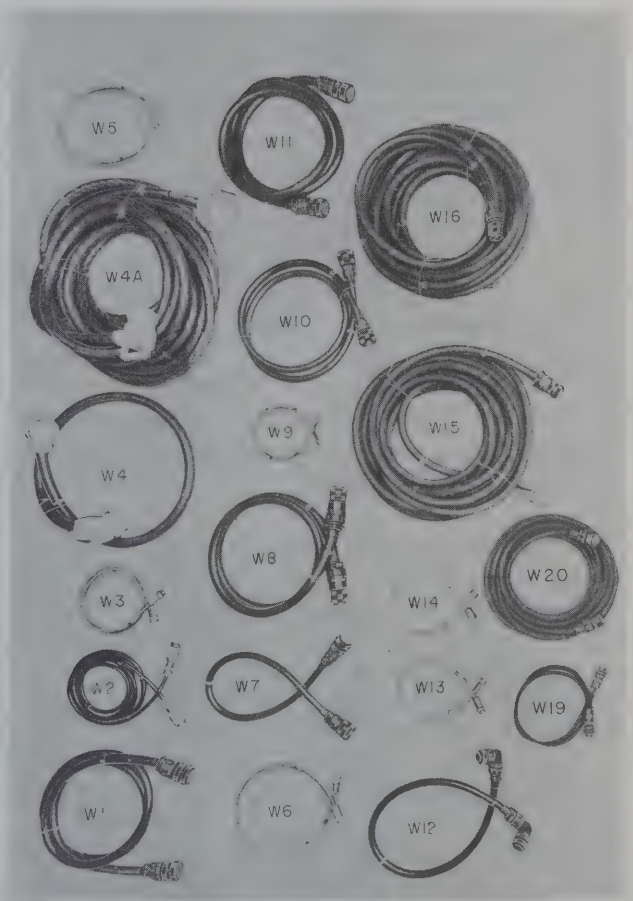

Figure 1—10. System Cables and Plugs

Sixteen cables with connectors are used for interunit connections. This includes two 50-ft cables to carry primary power to the equipment, one cable being used for system power and the other for the space heater

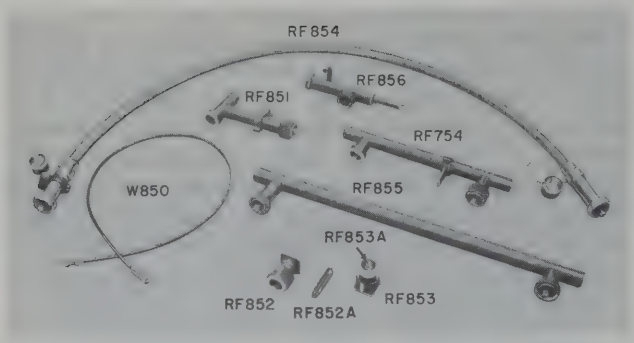

Figure 1—11. RF Coax Fittings and Cables

power only. The two power cables are identical so that the cable normally used for heaters can be used in an emergency for the main power circuit. A special single multi-conductor power, control, and signal cable is used for all of the indicator connections. A 6-ft length of this cable is supplied for normal operation and an additional 50-ft length is included for remote operation.

All power cables are of flexible, unarmored, watertight construction. Each cable has identical fittings at each end. The fittings differ from one cable to the next so that the cables can only be used in their proper location. The exceptions to this system are the main power cable fittings which can be interchanged, as indicated above, and power cable W20 which has a male fitting on one end and a female on the other.

The RF connectors consist of 4 rigid coaxial fittings

Figure 1—12. Shelter Tent S-68/TPS-1D

and 2 flexible coaxial cables. These fittings provide connections between the receiver-transmitter, antenna base, and antenna units. Two adapters are supplied for making connection to a rigid 1-5/8 in. coaxial line when a remote antenna installation is used.

Unit panel jack fittings which are not normally used during operation have captive covers. All cables and RF fittings are packed in Case CY-1060/TPS-1D except RF fitting RF754 and coaxial cable RF854. RF754 is packed in Case CY-2071/TPS-1G and cable RF854 is packed in a separate box.

j. SHELTER S-68/TPS-1D. *(See figure 1–12.)*

Shelter S-68/TPS-1D is contained in a bag and consists of the following: tent, tent fly, flooring, and accessories. The total weight is 203 lbs.

The canvas shelter rises from the 10-ft square flooring to its attachment on the antenna base unit. The pyramid-shaped canvas fly covers the tent roof and provides a slashproof joint beneath the antenna. The tent and fly thus form an obelisk-shaped shelter which provides adequate headroom and access to all units. The screened metallic entrance hatch, transported with part of the antenna reflector, is provided for installation at the tent entrance to permit ventilation.

The tent flooring consists of a 10-ft square of canvas. Mounting-base locating points are indicated at the center of the flooring.

All canvas is treated to resist fire, water, and mildew. Stakes, guy ropes, and fittings are supplied for proper anchoring of the tent, flooring, and tower structure.

Figure 1–13. Case CY-1060/TPS-1D

k. CASE CY-1060/TPS-1D. *(See figure 1–13.)*

Case CY-1060/TPS-1D measures 31 x 25 x 25 in. and weighs approximately 343 lbs loaded. The case contains tools, cables and RF coaxial cable fittings.

l. CASE CY-2071/TPS-1G. *(See figure 1–14.)*

Case CY-2071/TPS-1G consists of a tubular metal frame cradle used for transporting the following parts:

2 Antenna reflector sections
2 Mounting (MT-960/TPS-1D)
1 RF fitting (R754)
1 Folding chair

The cradle weighs 178 lbs loaded and 85 lbs unloaded, and measures 54 x 48 x 79 inches.

m. CASE CY-2078/TPS-1G.

Case CY-2078/TPS-1G is identical to CY-2071/TPS-1G except that one end of the case forms the entrance hatch to the shelter. This case is supplied (instead of Case CY-2071/TPS-1G) with equipments that include Shelter S-68/TPS-1D and are intended for field service.

n. CASE CY-2072/TPS-1G. *(See figure 1–15.)*

Case CY-2072/TPS-1G is similar in construction to Case CY-2071/TPS-1G. The case carries the center waveguide nozzle and reflector section and the two outer sections of the antenna reflector. The frame measurements are 59 x 59 x 86 in.; the loaded weight is 314 lbs, and the unloaded weight, 102 lbs.

o. TUNED CAVITY TS-172B/UP. *(See figure 1–16.)*

Tuned Cavity TS-172B/UP (echo box) is used for checking over-all performance and for making adjustments to the AN/TPS-1G equipment.

The unit weighs 65 lbs and measures 19-3/4 x 17-1/2 x 17-1/2 inches. Complete details are given in instruction book NAVSHIPS 92920, which is supplied with the unit.

p. CASE, ACCESSORIES CY-1297/TPS-1D. *(See figure 1–17.)*

Case CY-1297/TPS-1D is similar to Case CY-1060/TPS-1D, measuring 25 in. long and 25 in. wide x 32 in. high. The loaded weight is 182 lbs and unloaded weight is 106 lbs. The case contains plug-in type reserve parts such as tubes, fuses and indicator lamps as well as crystal rectifiers and wire.

q. VARIABLE POWER TRANSFORMER TF-238/U. *(See figure 1–18.)*

Variable Power Transformer TF-238/U (system variac) permits adjustment of the system voltage to 115 $\pm$5 volts, 400 cycles, from an input power source variation from 100 to 130 volts. The unit contains a male input receptacle and a female output receptacle which permits it to be inserted in series with power cables W15 and W20.

The unit weighs 43 lbs and measures 10-3/4 x 14-3/4 x 9-3/4 in. It is completely weatherproofed for operation outside a shelter.

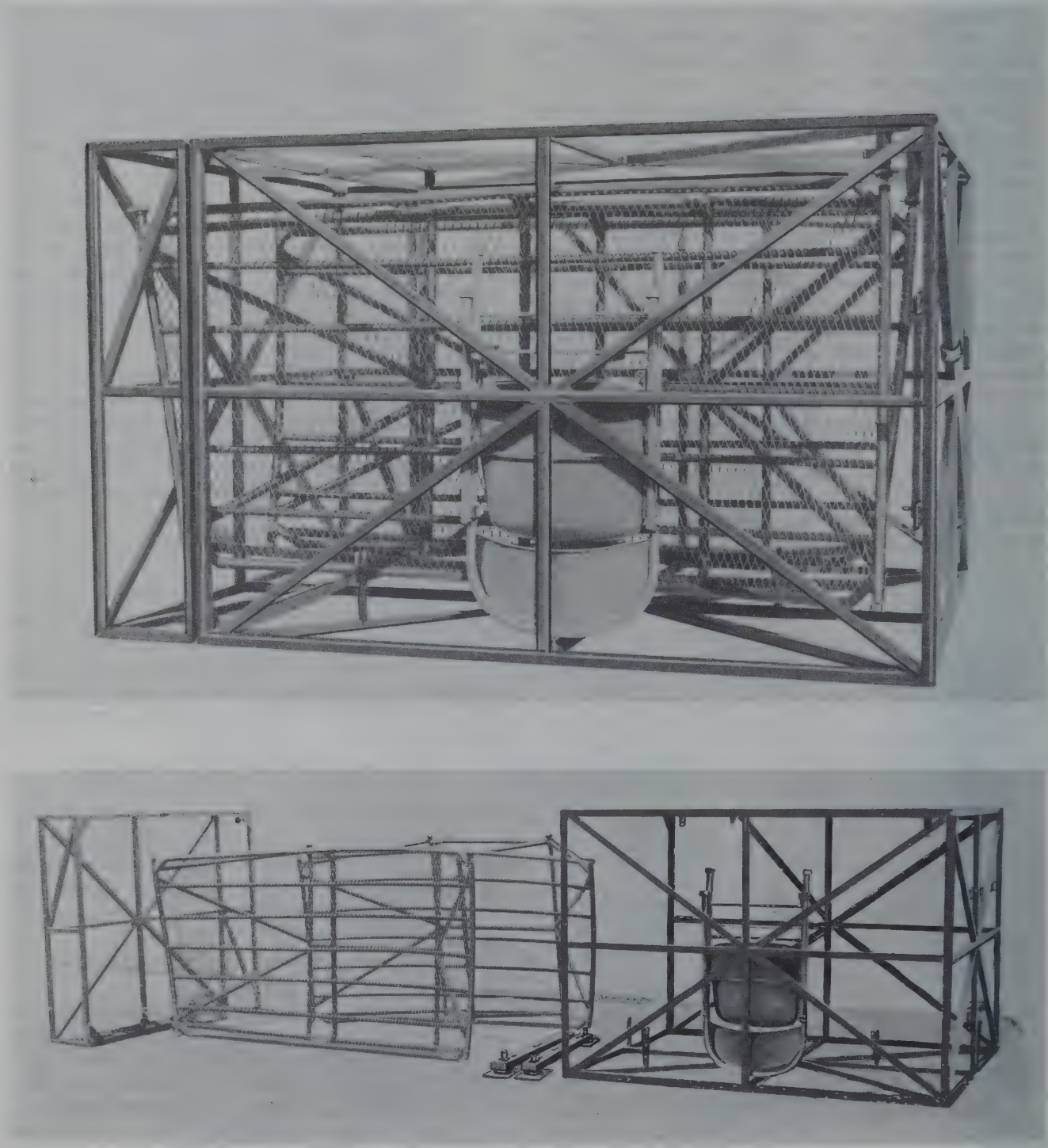

Figure 1—14. Case CY-2071/TPS-1G

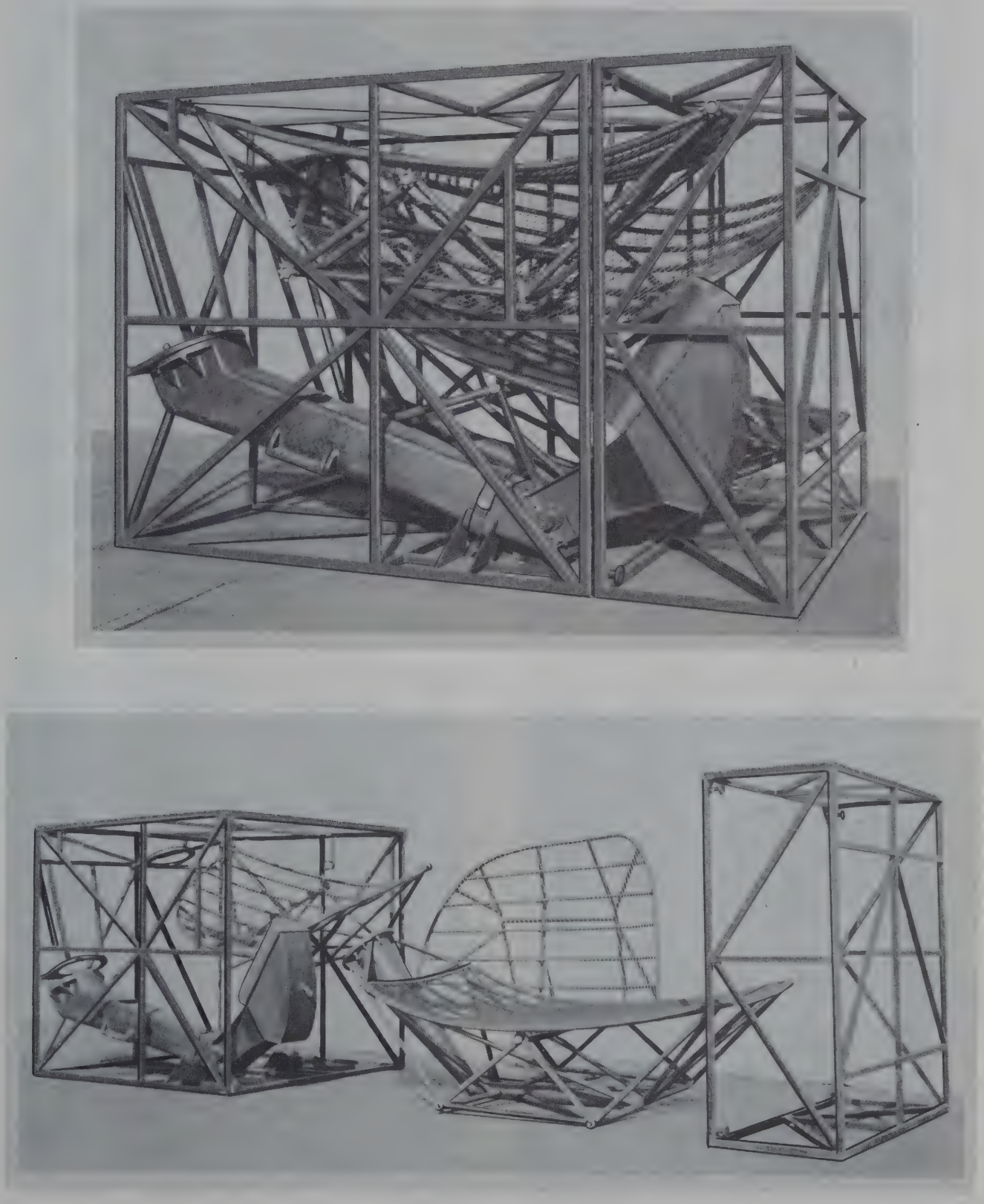

Figure 1—15. Case CY-2072/TPS-1G

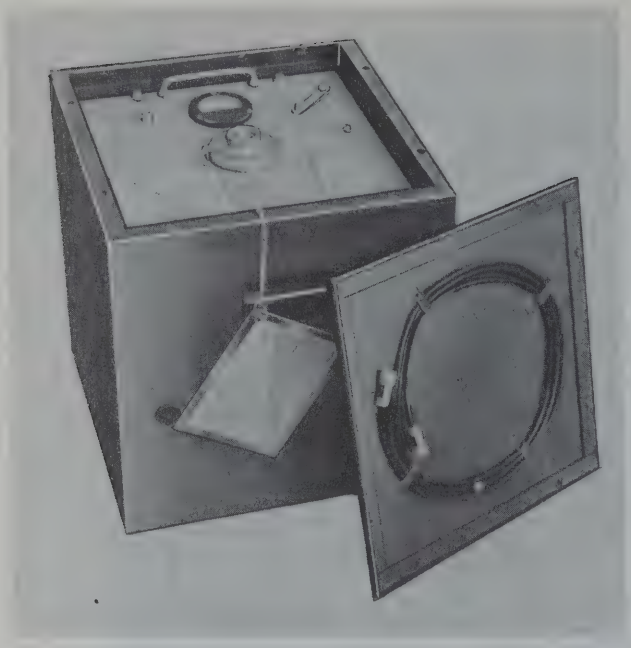

Figure 1—16. Tuned Cavity TS-172B/UP

Figure 1—18. Variable Power Transformer TF-238/U

r. SIGNAL COMPARATOR TEST SET TS-1002/TPS-1G. *(See figure 1—19.)*

Signal Comparator Test Set TS-1002/TPS-1G (tuning meter) can be used to align the first stage of the 60-Mc

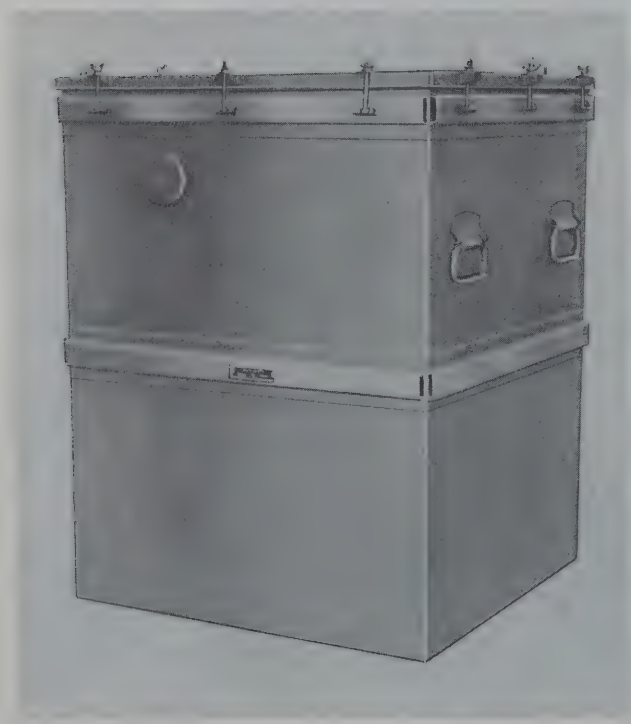

Figure 1—17. Case Accessories CY-1297/TPS-1D

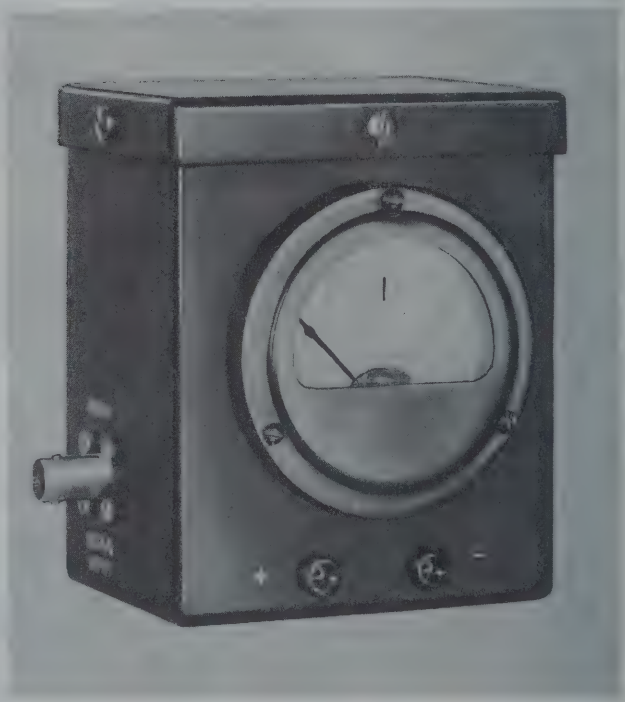

Figure 1—19. Signal Comparator Test Set TS-1002/TPS-1G

IF amplifier in the signal comparator, or to adjust the IF amplifier gain when operating the indicator remotely.

The unit measures 3-3/4 x 4-1/4 x 3 in. and is packed in Case CY-1060/TPS-1D.

s. TUNE-UP MIRROR *(See figure 1–20.)*

The tune-up mirror is provided to permit convenient viewing of the A-scope while tuning and adjusting the equipment.

The mirror is packed in Case CY-1060/TPS-1D.

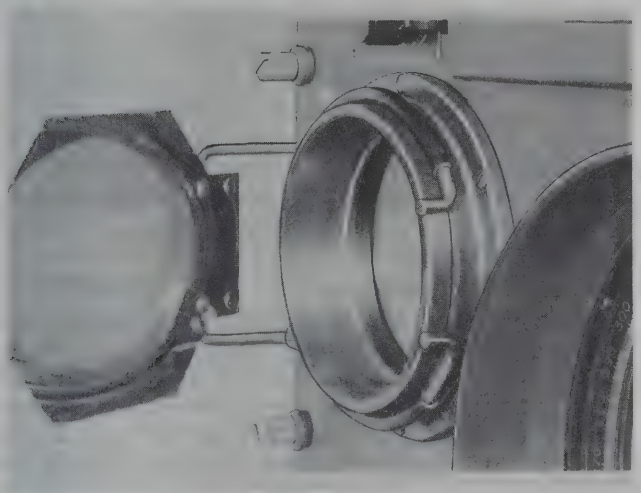

Figure 1–20. Tune-Up Mirror

3. BASIC PRINCIPLES OF OPERATION.

In its principles of operation, Radio Set AN/TPS-1G is basically similar to most air search radar systems. However, the inclusion of MTI (moving-target-indication) requires some variations in circuitry as well as the addition of certain circuits peculiar to MTI.

A magnetron oscillator, pulsed at 400 pps by a thyratron tube, generates the microwave transmitted energy. A thyratron trigger, generated by special timing circuits (including delay line networks), is used for both normal radar and MTI reception. An emergency trigger for normal radar use only is generated by the trigger generator on the modulator.

A reflector-type antenna is used to transmit the microwave energy and also to receive the energy reflected from objects. The antenna rotates to scan the surroundings, its bearing or azimuth information being relayed to the radar indicator by a synchro system.

An RF duplexing system, which includes dual cavities and two TR tubes, automatically switches the antenna between the transmitter and receiver. The received signals are converted from the microwave frequency (1220 to 1350 Mc) to 60-Mc through the use of a grounded grid triode local oscillator and a crystal mixer. Signal voltages from the local oscillator also convert a minute portion of the transmitted signal to 60 Mc through the use of an additional crystal mixer. This converted signal is used as a synchronizing signal in the signal comparator for MTI operation.

The signal needed for a normal-radar display during either normal-radar or gated-MTI operation is obtained from the amplified 60-Mc signal in an amplitude-modulation detector, as in conventional radar practice.

The resultant video signal is then amplified, limited, and applied to both a PPI and an A scope for display. The cicuitry of the display tubes is conventional and includes the use of marker signals for obtaining range information. The range scales available (20, 40, 80, and 160 nautical miles) can be individually selected for either display. In addition, a 10-mile strobe sweep can be used in conjunction with the A scope and is adjustable from 20 to 160 miles. The range at which the strobe is effective is indicated by a strobe marker signal on the PPI display.

In order to develop the MTI signals during gated-MTI operation, the MTI circuits handle the 60-Mc received signals somewhat differently after amplification. Basically, an MTI system operates on the principle of comparing the RF phase difference between transmitted and received signals from one receiving period to the next. (A receiving period is the period between transmitted pulses.) Generally, signals from fixed objects have an unchanging phase difference, while signals from moving objects have a varying phase difference.

Phase detection is used at the output of the 60-Mc amplifier to provide video signals for MTI. The phase detector produces video signals, the amplitude of which is a function of the phase difference between the received signals and a reference signal. The phase detector reference voltage is derived from a 60-Mc CW coherent oscillator whose phase is locked to the RF phase of each transmitted pulse. Thus, phase comparison between transmitted and received signals is accomplished at the 60-Mc phase detector.

The video signals developed by the phase detector are distributed to two channels, a delayed channel and an undelayed channel. The two circuits are such that the output signals of the delayed circuit are opposite in polarity and exactly one receiving period behind those of the undelayed circuit. The two signals are then combined.

If the signals are from fixed objects, the signal amplitudes will be the same from one receiving period to the next. Therefore, as the signals are of the same amplitude and timing and of opposite polarity, the signals will cancel when combined. However, if any of the signals are from objects which have motion, these signals will vary in amplitude from one receiving period to the next; and when these are combined a difference voltage will result. The difference voltage is then amplified, limited, and passed on to the display tubes.

Thus, during the MTI portion of a gated-MTI sweep, only moving targets are displayed. The MTI gating action is produced by an electronic switching circuit that routes either the normal radar signals or the MTI signals

to the displays during their respective portions of each range sweep.

In order to establish precise coincidence between delayed and undelayed signals, the delay circuits are also used to develop triggers for the thyratron modulator.

An IFF trigger signal generated in Radio Set AN/TPS-1G is fed to the external IFF interrogating equipment. Interrogating signals, developed by the external IFF equipment, are fed to the IFF antenna of the AN/TPS-1G.

The IFF responses, picked up by the IFF antenna of the AN/TPS-1G are fed to the external IFF equipment.

Video signals developed by the external IFF equipment are fed to Radio Set AN/TPS-1G where they are amplified and applied to the PPI.

Since triggers for the IFF equipment are developed by the AN/TPS-1G and since the IFF antenna is combined with the AN/TPS-1G radar antenna, range and azimuth co-ordination of IFF and radar signals is established on the PPI screen.

When the IFF pre-trigger is used (J157), the delay between the IFF trigger and the radar modulator trigger can be set to 12.4 or 37 microseconds with switch S101. This switch is located on the trigger chassis in the modulator unit.

4. PHONE CIRCUIT.

As the indicator and antenna base units are designed for remote operation, a phone circuit is provided between these two units and the power supply unit. The circuit appears on open-circuit jacks (with protective caps) on the indicator and power supply panels and on the drive assembly of the antenna unit.

The jacks receive 1/4-inch diameter plugs with tip and sleeve connections. The circuit is intended for use of sound-powered phones.

5. EQUIPMENT CHANGES MADE DURING PRODUCTION.

The information in this technical manual reflects the status of Radio Set AN/TPS-1G shortly before the delivery of the first production model. As of the time of publication, there have been no production changes and no field changes.

6. FUNCTIONAL SIMILARITY TO RADIO SET AN/TPS-1D.

Note

Personnel already familiar with AN/TPS-1D are cautioned against using the following information as a substitute for the instructions for AN/TPS-1G presented in this instruction book.

Radio Set AN/TPS-1G and its individual components are similar in appearance and basic principles of operation to the corresponding entities of Radio Set AN/TPS-1D (as modified by Field Change #9, and described in NAVSHIPS 91579(B), Change 3). However, there are significant functional differences. The major functional differences are described in paragraph 6*a*, below; other differences, which are of lesser importance and which do not markedly modify basic functions of the equipment, are described in paragraph 6*b*, below.

a. MAJOR FUNCTIONAL DIFFERENCES.

(1) AN/TPS-1G employs gated MTI instead of the conventional MTI system used in AN/TPS-1D. The gated-MTI circuits are located in the signal-comparator unit; the operator's MTI range-gate control for adjusting the range at which the displays switch between MTI and normal radar is located in the indicator unit. The control circuit is carried in the existing cable between the indicator and power-supply units, and in a new three-conductor cable (W19) between the power-supply and signal-comparator units. An adapter-type connector, E310, supplied with AN/TPS-1G, makes it possible to disable the gating circuits when the signal comparator of AN/TPS-1G is installed in AN/TPS-1D.

(2) AN/TPS-1G presents PPI displays on a 10-inch tube instead of on the 7-inch tube used in the indicator unit of AN/TPS-1D.

(3) The signal comparator unit of AN/TPS-1G uses a quartz-type delay line (instead of mercury-type) to provide the 2500-μs delay required for MTI operation.

(4) The antenna unit supplied with AN/TPS-1G has a radiation pattern that is approximately cosecant-squared for both radar and IFF. Since the antenna unit is heavier than the one supplied with AN/TPS-1D, the antenna-base unit of AN/TPS-1G is designed to supply the greater driving power required for stable operation in high winds.

(5) The AN/TPS-1G modulator unit contains an internal magnetron aging variac. The power supply unit continues to have provisions for connecting an external magnetron-aging variac (as in AN/TPS-1D), even though it is not required for AN/TPS-1G.

(6) The IF preamplifier in the receiver-transmitter unit of AN/TPS-1G has been redesigned to provide a lower noise figure than can be realized with AN/TPS-1D.

(7) AN/TPS-1G is furnished with a separate system variac capable of handling the input power to the systems-power and heater-power circuits. It can be adjusted to obtain rated voltage for source-voltage variations between 100 and 130 volts.

(8) Depending on contract requirements, some accessory items (such as shelter, certain tools, and certain inter-connecting cables) may not be supplied with AN/TPS-1G.

b. MINOR DIFFERENCES.

(1) The circuit changes in AN/TPS-1D that were effected by the addition of a pre-trigger chassis in Field Change #9 have been included in the modulator-trigger chassis of AN/TPS-1G.

(2) The antenna base of AN/TPS-1G employs spur gearing (instead of worm gearing), and it operates with dry-type lubrication (Beacon 325). It includes a solenoid-controlled brake that is applied whenever power is removed from the drive-motor field.

(3) Tuned Cavity TS-172B/UP (instead of Echo Box TS-545/UP) is supplied with AN/TPS-1G when the contract calls for an echo box.

(4) A RADIATE-READY pilot lamp located on the indicator unit of AN/TPS-1G lights when the time-delay circuits have completed their cycle.

(5) The tuning meter (coho-mixer crystal current) on the indicator unit of AN/TPS-1G can be switched to indicate line voltage.

(6) A rectifier-type meter (TS-1002/TPS-1G) for use in tuning the 60-Mc i-f amplifier is supplied as a separate accessory component with AN/TPS-1G.

(7) A tune-up mirror is supplied. It can be clamped on the indicator unit in a position that will enable men making adjustments at other components to observe displays on the A scope.

(8) The modulator unit of AN/TPS-1G uses only one thyratron tube in the pulse-generation circuit instead of the two paralleled thyratrons and balancing transformer of AN/TPS-1D. Over-all operation is not affected, except that reliability is improved.

7. INTERCHANGEABILITY OF COMPONENTS BETWEEN AN/TPS-1D AND AN/TPS-1G.

Generally speaking, a single component of AN/TPS-1G can be substituted in AN/TPS-1D without degrading the performance of the latter. Correspondingly, a single component of AN/TPS-1D can be used satisfactorily in AN/TPS-1G to provide the service that would normally be expected from the older AN/TPS-1D. However, both of the foregoing statements are subject to important qualifications, and the degree of interchangeability in any given case can only be determined from the facts summarized in subparagraphs *a* and *b*, below.

The term "completely interchangeable" means that the modified equipment will perform its major functions at least as well as the original equipment would, if the correct component were installed. The term "conditionally interchangeable" means that the exchange is possible but with certain qualifications.

a. COMPONENTS OF AN/TPS-1G INSTALLED IN AN/TPS-1D.

(1) RADAR MODULATOR MD-144A/TPS-1D: Completely interchangeable. The internal magnetron-aging circuits will operate.

(2) AZIMUTH AND RANGE INDICATOR IP-141A/TPS-1D: Completely interchangeable. AN/TPS-1D will be provided with a 10-inch PPI display. Also, see "Signal Comparator", below.

(3) SIGNAL COMPARATOR CM-36A/TPS-1D: Conditionally interchangeable. If, in addition to the signal comparator unit, AN/TPS-1D includes Azimuth and Range Indicator IP-141A/TPS-1D and Power Supply PP-674A/TPS-1D, gated-MTI operation is provided. If the AN/TPS-1G indicator unit and/or power-supply unit are not installed, conventional MTI operation is provided, as in AN/TPS-1D. In the latter case, however, a special connector, E310 (furnished with AN/TPS-1G) must be used on the signal-comparator unit.

(4) POWER SUPPLY PP-674A/TPS-1D: Completely interchangeable.

(5) RADAR RECEIVER-TRANSMITTER RT-212A/TPS-1D: Completely interchangeable. The more favorable noise figure of AN/TPS-1G will be obtained.

(6) ANTENNA BASE AB-498/TPS-1G: Completely interchangeable.

(7) ANTENNA AS-673/TPS-1E: Conditionally interchangeable. Useable for limited service only, unless Antenna Base AB-498/TPS-1G is also installed. Antenna cannot be driven at rated speed under all wind conditions by Antenna Base AB-221/TPS-1D. Advantages of cosecant-squared radiation pattern will be obtained.

(8) MOUNTING MT-960/TPS-1D: Completely interchangeable.

(9) VARIABLE POWER TRANSFORMER TF-238/U. Useable with AN/TPS-1D, even though no equivalent is suppplied with AN/TPS-1D.

(10) SIGNAL COMPARATOR TEST SET TS-1002/TPS-1G: Useable with AN/TPS-1D, even though no equivalent is supplied with AN/TPS-1D.

(11) TUNED CAVITY TS-172B/UP: Completely interchangeable with Echo Box TS-545/UP (part of Radar Test Set AN/UPM-30).

b. COMPONENTS OF AN/TPS-1D INSTALLED IN AN/TPS-1G.

(1) RADAR MODULATOR MD-144/TPS-1D: Conditionally interchangeable. All AN/TPS-1G operations will be normal except that aging of the magnetron must be carried out with an external variac as in AN/TPS-1D. The external magnetron-aging variac is not supplied with AN/TPS-1G.

(2) AZIMUTH AND RANGE INDICATOR IP-141/TPS-1D: Conditionally interchangeable. All AN/TPS-1G operations will be normal, except that the PPI display will be smaller and only conventional MTI will be available, as in AN/TPS-1D. The special adapter-type connector, E310, (supplied with AN/TPS-1G) must be installed in Signal Comparator CM-36A/TPS-1D.

(3) SIGNAL COMPARATOR CM-36/TPS-1D: Conditionally interchangeable. Only conventional MTI, as in AN/TPS-1D, will be provided.

(4) POWER SUPPLY PP-674/TPS-1D: Conditionally interchangeable. Operation will be normal, but the unit will be operating above ratings and power transformer life will be shortened. Recommended for intermittent emergency operation only; not continuous duty. Only conventional MTI will be available, as in AN/TPS-1D. The special adapter-type connector, E310 (supplied with AN/TPS-1G) must be installed on Signal Comparator CM-36A/TPS-1D.

(5) RADAR RECEIVER-TRANSMITTER RT-212/TPS-1D. Conditionally interchangeable. Operation will be normal, except for a less favorable noise figure as in AN/TPS-1D.

TABLE 1—1. EQUIPMENT SUPPLIED

QUANTITY PER EQUIPMENT	NAME OF UNIT	TYPE DESIGNATION	OVER-ALL DIMENSIONS			VOLUME	WEIGHT
			HEIGHT	WIDTH	DEPTH		
1	Radio Set AN/TPS-1G, consisting of:		22.4 ft.	188.4	105	*214.93	3026
	2 Mounting	MT-960/TPS-1D	5.13	6.0	34.13	1.2	23
			(each piece)				
	1 Radar Modulator	MD-144A/TPS-1D	29	24	23.25	9.76	347
	1 Azimuth and Range Indicator	IP-141A/TPS-1D	29	24	23.25	9.76	224
	1 Signal Comparator	CM-36A/TPS-1D	20	24	23.25	6.75	146
	1 Power Supply	PP-674A/TPS-1D	29	24	23.25	9.76	223
	1 Radar Receiver-Transmitter	RT-212A/TPS-1D	29	24	23.25	9.76	330
	1 Antenna Base	AB-498/TPS-1G	33.75	24	23.25	11.2	347
	1 Antenna	AS-673/TPS-1E	95	188.5	105	108	260
	1 Set of Interconnecting Cables						
#1	Shelter (includes fly, flooring and accessories)	S-68/TPS-1D	14.9 ft.	10 ft.	10 ft.	866	203
			(tent erected)				
1	Case, containing tools, cables and RF coaxial cable fittings.	CY-1060/TPS-1D	31	25	25	11.2	343
1	Case, for transporting 2 antenna reflector sections, Mounting MT-960/TPS-1D, chair and RF fitting RF-754.	CY-2071/TPS-1G	54	48	86	12.95	178
1	Case, containing center section and 2 outer sections of antenna.	CY-2072/TPS-1G	59	59	86	17.1	314
1	Case, Accessories, containing spare transmitter tube and reserve parts (tubes, fuses, lamps, crystal rectifiers, wire).	CY-1297/TPS-1D	31	25	25	11.2	182
1	Variable Power Transformer	TF-238/U	10.75	14.75	9.75	.89	43
1	Tuned Cavity	TS-172B/UP	19.75	17.5	17.5	4.5	65
1	Signal Comparator Test Set	TS-1002/TPS-1G	3.75	4.25	3	.03	1

NOTES

Unless otherwise noted, dimensions are in inches, volume in cubic feet, weight in pounds.
*Volume is computed with all units, assemblies and miscellaneous parts in transport cases.
#Not supplied with all equipments.

TABLE 1—2. EQUIPMENT REQUIRED BUT NOT SUPPLIED

QUANTITY PER EQUIPMENT	NAME OF UNIT	TYPE DESIGNATION	REQUIRED USE	REQUIRED CHARACTERISTICS
1	Generator set, gasoline engine	Varies with installations PU-107/U (for Signal Corps) PU-254/U (for all others)	System & heater power	115 volts ± 5% 440-cyc ± 4%, 1-phase 5-kw system power 2.5-kw heater power 7.5-kw total power requirements.

(6) ANTENNA BASE AB-221/TPS-1D: Conditionally interchangeable. Will not drive Antenna AS-673/TPS-1E at rated speeds under all wind conditions.

(7) ANTENNA AS-548/TPS-1D: Conditionally interchangeable. Operation will be normal except that radiation pattern will be that of AN/TPS-1D.

(8) MOUNTING MT-960/TPS-1D: Completely interchangeable.

(9) TEST SET, RADAR AN/UPM-30: Echo Box TS-545/UP (part of AN/UPM-30) completely interchangeable with Tuned Cavity TS-172B/UP.

8. REPORT FORMS.

The following forms will be used for reporting unsatisfactory conditions of Army material and equipment:

a. DD Form 6, Report of Damaged or Improper Shipment will be filled out and forwarded as prescribed in SR 745-45-5.

b. DA AGO Form 468, Unsatisfactory Equipment Report, will be filled out and forwarded to the Office of the Chief Signal Officer as prescribed in SR 700-45-5.

c. DA AGO Form 11-238, Operator First Echelon Maintenance Check List for Signal Corps Equipment (Radar), will be prepared in accordance with instructions on the back of the form (figure 21).

d. DA AGO Form 11-239, Second and Third Echelon Maintenance Check List for Signal Corps Equipment (Radar), will be prepared in accordance with instructions on the back of the form.

e. Use other forms and records as authorized.

9. EQUIPMENT SUPPLIED.

Table 1—1 lists major units and accessories supplied with Radio Set AN/TPS-1G.

10. EQUIPMENT REQUIRED BUT NOT SUPPLIED.

Table 1—2 lists equipment required for Radio Set AN/TPS-1G which is not supplied.

11. SHIPPING DATA.

Table 1—3 lists shipping data for Radio Set AN/TPS-1G.

12. ELECTRON TUBE COMPLEMENT.

Table 1—4 lists the electron tubes used in Radio Set AN/TPS-1G.

13. SEMI-CONDUCTOR DEVICE COMPLEMENT.

Table 1—5 lists the semi-conductor device complement of the equipment.

14. REFERENCE DATA.

Reference data for Radio Set AN/TPS-1G is listed in table 1—6.

15. INTERCONNECTING CABLES.

Table 1—7 lists the interconnecting cables required for Radio Set AN/TPS-1G.

TABLE 1–3. SHIPPING DATA

SHIPPING BOX NO.	QUANTITY	CONTENTS NAME	CONTENTS DESIGNATION	OVER-ALL DIMENSIONS HEIGHT	OVER-ALL DIMENSIONS WIDTH	OVER-ALL DIMENSIONS DEPTH	CRATED VOLUME	CRATED WEIGHT
1	1 2 2	Radar Modulator Sets Maintenance Prints for Radio Set AN/TPS-1G Technical Manual for Radio Set AN/TPS-1G (NAVSHIPS 92951)	MD-144A/TPS-1D	33	28	31	16.5	408
2	1	Azimuth and Range Indicator	IP-141A/TPS-1D	33	27	31	16	284
3	1	Signal Comparator	CM-36A/TPS-1D	24	27	27	10	181
4	1	Power Supply	PP-674A/TPS-1D	33	27	27	14	290
5	1	Radar Receiver-Transmitter	RT-212A/TPS-1D	33	28	30	16	392
6	1	Antenna Base	AB-498/TPS-1G	38	28	30	18.4	412
—	—	Antenna (packed in boxes 7 and 8)	AS-673/TPS-1E					
7 #	1	Case, containing 2 intermediate sections of Antenna AS-673/TPS-1E, chair, 2 Mounting MT-960/TPS-1D, RF transmission line section RF754.	CY-2071/TPS-1G	†51.4 ††57.25	54.75 58	80.5 84.25	128 162	290 390
8	1	Case, containing 2 outer sections and center section of Antenna AS-673/TPS-1E	CY-2072/TPS-1G	†62.25 ††67	63.75 65.5	87 89.75	200 230	500 600
9	1 2	Tuned Cavity Instruction Books (NAVSHIPS 92920) for Tuned Cavity TS-172B/UP	TS-172B/UP	24.5	21	22.5	6.7	128
10	1	Case, containing 1 Signal Comparator Test Set TS-1002/TPS-1G 1 Tune-Up Mirror and bag 1 Terminating connector (E310) 1 AN-3106A-20-6S connector plug (IFF power) 1 RF transmission line section (RF856) 1 Coax to cable adapter (RF851) 3 Adapter connectors (UG-201/U, UG-298/U, UG-349/U) 18 Cable assemblies (W1 through W3, W5 through W14, W19, W20, W850) 1 RF connecting sleeve 1 RF protective cap 1 Viewing hood (5-inch) A-scope 1 Viewing hood (10-inch) PPI-scope 1 Cursor assembly (part of IP-141A/TPS-1D) 1 Mil dial (part of IP-141A/TPS-1D) 1 Strap wrench 1 Screwdriver ##Plus following components 2 RF coax adapter (RF852, RF853) 2 Contact assemblies (RF852A, RF853A) 1 RF transmission line section (RF855) 4 Cable assemblies (W4, W4A, W15, W16) 1 Set hand tools 1 Open-end wrench 1/2"-9/16" 1 Open-end wrench 3/4"-13/16" 1 Pair pliers, slip-joint 1 Tape, friction 1 Hatchet 1 Knife 1 Soldering iron 1 Flashlight 2 batteries, dry-cell 1 Levelling rod 1 Magnetron tool 1 Tower assembly tool 3 Straps (30") 3 Straps (36") 1 Socket adapter, electron tube, octal	CY-1060/TPS-1D	36	29	32	18	405

		1 Socket adapter, electron tube, 7-pin miniature 1 Socket adapter, electron tube, 9-pin miniature 1 Sewing kit						
11	1	Case, Accessories, containing 1 spare transmitting magnetron (type 5J26), solder, 2 carbon brushes (for antenna drive motor B751), 1 carbon brush (for magnetron aging variac T155), wire and the following reserve parts: *Electron Tubes* *Qty Type* — *Qty Type* 1 371B — 1 5751 1 6AG7 — 1 6L6WGB 4 5654/6AK5W — 1 5684/C3J/A 2 5726/6AL5W — 1 1Z2 1 6005 — 1 4B31 2 6AU6WA — 1 5C22/HT415 1 5750/6BE6W — 1 6SN7WGT 4 5814A — 1 5727/2D21W 1 OB2WA — 1 6322 2 5R4WGB — 1 2C40 1 6080WA — 1 5842 2 6AH6 — 1 1B3GT 1 0A2WA — 1 5725/6AS6W 1 6Y6G — 1 12AT7WA *Lamps* 2 glow lamps, 1/4 watt 4 glow lamps, 1/25 watt 4 incandescent lamps 6v 1 incandescent lamp 24v *Fuses* 10 60 amp.250v (time delay) 10 30 amp. 250v 5 30 amp. 250v 5 15 amp. 250v 25 6.25 amp. 250v (time delay) 5 4.0 amp. 250v (time delay) 20 1.6 amp. 250v (time delay) 5 0.4 amp. 250v (time delay) 5 0.75 amp. 250v *Crystal rectifiers* 34 type 1N127 2 type 1N21B 2 type 1N21C	CY-1297/TPS-1D	36	27	27	15.5	224
12	1	Cable Assembly (RF854)	CG-900/U (8′ 0″)	6	6	102	2.1	35
13	1	Transformer, Variable Power	TF-238/U	18	13	12	1.6	63
14 ##	4	Guywire and turnbuckle assembly		14	12	48	4.1	130
	4	25 ft. lengths manila rope						
	4	Anchor						
15 ##	1	Shelter, including 1 Bag-tent 1 Fly-shelter 1 Cloth-ground 1 Patch 18 20-ft. lengths manila rope 27 Tent stakes 2 Rods, 19.5 in. 2 Rods, 21 in.	S-68/TPS-1D	44	34	22	18.6	260

Unless otherwise noted, dimensions are in inches, volume in cubic feet, and weight in pounds.

†Domestic shipment.

#Shipping box #7 contains Antenna Case CY-2078/TPS-1G in those equipments supplied with Shelter S-68/TPS-1D.

††Overseas shipment.

##Not supplied with all equipments.

TABLE 1—4. ELECTRON TUBE COMPLEMENT

UNIT	NO. USED	NUMBER OF TUBES OF TYPE INDICATED																														TOTAL NO. TUBES IN EACH UNIT
		0A2WA	0B2WA	1B3GT	1Z2	2C40	4B31	5CP1A	5C22/HT-415	5J26	5R4WGB	6AG7	6AH6	6AU8WA	6L6WGB	6SN7WGT	6Y6G	10KP7	12AT7WA	371B	5654/6AK5W	5684/C3J/A	5725/6AS6W	5726/6AL5W	5727/2D21W	5750/6BE6W	5751	5814A	5842	6005	6080WA	6322	
Radar Modulator MD-144A/TPS-1D		—	—	—	—	—	1	—	1	—	—	1	—	—	—	2	—	—	—	4	—	—	—	1	—	—	—	1	—	—	—	—	11
Azimuth And Range Indicator IP-141A/TPS-1D		—	—	1	—	—	—	1	—	—	—	1	3	2	1	—	—	1	—	—	—	—	—	3	—	—	2	11	—	—	—	—	26
Signal Comparator CM-36A/TPS-1D		—	2	—	—	—	—	—	—	—	—	2	—	3	—	—	—	—	2	—	24	—	3	2	—	1	—	3	—	4	—	—	46
Power Supply PP-674A/TPS-1D		3	—	—	—	—	—	—	—	—	6	—	2	—	—	—	3	—	—	—	—	—	—	—	—	—	—	—	—	—	3	—	17
Radar Receiver-Transmitter RT-212A/TPS-1D		—	—	—	1	1	—	—	—	1	—	—	—	—	—	—	—	—	—	—	3	—	—	—	—	—	—	—	2	—	—	2	10
Antenna Base AB-498/TPS-1G		—	—	—	—	—	—	—	—	—	—	—	—	—	—	—	—	—	—	—	—	2	—	2	1	—	1	—	—	—	—	—	6
Antenna AS-673/TPS-1E		—	—	—	—	—	—	—	—	—	—	—	—	—	—	—	—	—	—	—	—	—	—	—	—	—	—	—	—	—	—	—	—
Signal Comparator Test Set TS-1002/TPS-1G		—	—	—	—	—	—	—	—	—	—	—	—	—	—	—	—	—	—	—	—	—	—	—	—	—	—	—	—	—	—	—	—
Total Number of Each Type		3	2	1	1	1	1	1	1	1	6	4	5	5	1	2	3	1	2	4	27	2	3	8	1	1	3	15	2	4	3	2	116

TABLE 1—5. SEMI-CONDUCTOR DEVICE COMPLEMENT

UNIT	1N21B	1N21C	1N127	TOTAL EACH UNIT
Radar Modulator MD-144A/TPS-1D				0
Azimuth and Range Indicator IP-141A/TPS-1D			2	2
Signal Comparator CM-36A/TPS-1D			14	14
Power Supply PP-674A/TPS-1D				0
Radar Receiver-Transmitter RT-212A/TPS-1D	1	1		2
Antenna Base AB-498/TPS-1G				0
Antenna AS-673/TPS-1E				0
Signal Comparator Test Set TS-1002/TPS-1G			1	1
TOTAL	1	1	17	19

TABLE 1—6. REFERENCE DATA

Name and Designation of Equipment:
Radio Set AN/TPS-1G

Contract Number and Date:

NObsr-64764	15 June 1955
NObsr-71296	16 May 1956

Contractor: Hazeltine Electronics Division,
Hazeltine Corporation
Little Neck, New York

Cognizant Naval Inspector:

Inspector of Naval Material,
New York, N.Y.

Number of Packages per Shipment: 15

Total Cubical Contents:
Crated, 545.8 cu. ft
Uncrated, 214.93 cu. ft

Total Weight:
Crated, 4002 lbs
Uncrated, 3026 lbs

Type of Presentation: A and PPI

Frequency Range: 1220-1350 Mc

Wavelength: 24.6-22.2 cm

Transmitter Bandwidth: 1 Mc

Peak Power Output: 500 kw minimum

Average Power: 400 watts minimum

Pulse Rate:
380 nominal, adjustable from 360 to 400 pps (normal radar operation only)

Duty Cycle: .0008%

Pulse Width: 2.0 microseconds

Range: Approximately 300 yd to 160 nautical mi

Range Accuracy:
Within 3% of the range +1 nautical mile

Type of Feed: Horn

Type of Reflector: Cosecant-squared

Azimuth Accuracy: ±1%

Antenna Radiation Pattern:
Horizontal, 3.4° to 4°
Vertical, 10° to 12°, cosecant-squared from +9° to 42°

Antenna Gain:
26 db from 1220-1300 Mc
27 db from 1300-1350 Mc

Antenna Windload:
2200 lbs at 90 mph (corrected to −54°C (−65°F))

Type of Receiver: Superheterodyne

LO Frequency Range: 1280-1410 Mc

Intermediate Frequency: 60 Mc

IF Bandwidth: 1.1 Mc
Receiver Noise Figure: 9.5 db maximum

Characteristics of Power Supply

Required for Operation:
Voltage, 115-v ±5%, 400-cyc ±4%, single-phase
Wattage, 7.5-kw (includes 5-kw system power and 2.5-kw heater power)

Heat Dissipation (approximate):
Radar modulator, 800 watts
Indicator, 150 watts
Signal comparator, 210 watts
Power supply, 350 watts
Radar receiver-transmitter, 1300 watts
Antenna base, 350 watts

Provisions:
Choice of normal or gated MTI operation
Antenna with antenna base may be operated up to 150 ft from transmitter
Indicator may be operated remotely up to 50 ft
Standard panel connectors provide trigger, video and synchro signals for operation of Repeater PPI

TABLE 1–7. INTERCONNECTING CABLES

REF. DESIG.	NOMENCLATURE DESIGNATION	LOCATION	FUNCTION
W1	CX-2002/U (9′-3″)	J151 (modulator) to J406 (power supply)	Power and control voltages
W2	CG-948/U (12′-6″)	J155 (modulator) to J505 (receiver-transmitter)	Pulse cable
W3	CG-247B/U (6′-1″)	J152 (modulator) to J302 (signal comparator)	Trigger cable
W4 W4A *W4B	CX-1999/U (6′-9″) CX-1999/U (51′-3″) CX-1999/U (8′-2″)	J601 (indicator) to J407 (power supply)	Video, trigger, synchro, control, and power voltages
W5	CG-901/U (5′-9″)	J306 (signal comparator) to J507 (receiver-transmitter)	Signal I.F. voltages
W6	CG-901/U (5′-9″)	J304 (signal comparator) to J503 (receiver-transmitter)	Coho-Synch.-input
W7	CX-2001/U (3′-7″)	J301 (signal comparator) to J401 (power supply)	Power and control voltages
W8	CX-2000/U (7′-9″)	J408 (power supply) to J508 (receiver-transmitter)	Power and control voltages
W9	CG-247A/U (5′-1″)	J416 (power supply) to J506 (receiver-transmitter)	Trigger cable
W10 W10A	CX-1996/U (7′-2″) CX-1996/U (150′-3″)	J402 (power supply) to J701 (antenna base)	Synchro, power, and control voltages
†W11 †W11A	CX-1998/U (9′-7″) CX-2160/U (150′-4″)	J403 (power supply) to J751 (antenna base)	Synchro, power, and control voltages
W12	CX-2003/U (5′-2″)	J702 (gear box) to J753 (servo)	Synchro, power, and control voltages
W13	CG-247B/U (4′-1″)	J305 (signal comparator) to J413 (power supply)	Video cable
W14	CG-247B/U (4′-1″)	J303 (signal comparator) to J415 (power supply)	Video cable
W15 *W15A	CX-1997/U (50′-1″) CX-1997/U (8′-2″)	(system power source) to J2405 (system variac) or J405 (power supply)	Power input to system-variac or power supply
W16 *W16A	CX-1997/U (50′-1″) CX-1997/U (8′-2″)	(heater power source) to J404 (power supply)	Heater power input
W17	Not used		
W18	Not used		
W19	CX-3986/U (4′-0″)	J442 (power supply) to J310 (signal comparator)	MTI range-gate control
W20	CX-3987/U (20′-2″)	J2401 (system variac) to J405 (power supply)	System power input
RF754 RF851 RF852 RF853	See Section 8	RF856 to antenna Coax to cable adapter Adapter for 1-5/8″ Air-dielectric line Same as RF852	Signal Signal Signal Signal
RF854	CG-900/U (8′-0″)	RF855 to antenna base	Signal
RF855 RF856	See Section 8	Receiver-transmitter to RF854 Rotary-joint to RF754 & W850	Signal Signal
W850	CG-903/U (6′-9″)	RF856 to IFF antenna	IFF Signal

*For reference only. Not supplied with AN/TPS-1G. Required only with separate power-supply units (PP-674A/TPS-1D) delivered on Contracts NObsr-64764 and NObsr-71296.

†Connections in W11 and W11A are similar but not identical. See External Cabling Diagram.

SECTION 2
THEORY OF OPERATION

1. GENERAL.

Radio Set AN/TPS-1G when considered as a normal search radar system is basically similar in theory of operation to typical air search radar equipments.

However, because of the high power, special care is required in the design of the RF section to provide adequate protection for the signal mixer crystal. For example, two TR tubes and a harmonic filter (harmonic attenuator) are used. As a result, reliable operation with good crystal life is obtained.

The inclusion of MTI (moving - target - indication) requires the use of additional circuits and also increases the stability requirements of the transmitter and receiver.

Referring to the block diagram, figure 2—1, the general theory of operation is as follows:

For MTI and normal radar operation, triggers are generated in the MTI circuits (signal comparator unit). For emergency operation as a normal radar system only, triggers to initiate the transmitter pulse are generated in the trigger generator (modulator unit). The generated triggers (MTI or emergency) trip a thyratron switch tube which develops video pulses through the pulse-forming network. The pulses then are applied to the magnetron oscillator through a pulse transformer.

To establish co-ordination between radar and IFF operation, triggers from Radio Set AN/TPS-1G are fed to the IFF equipment. Thus, the timing circuits of the two equipments are synchronized to establish range co-ordination.

The magnetron oscillator generates RF pulses which are transferred to the antenna through an RF coaxial system and coaxial line. The RF power is then radiated by the rotating antenna, which is of the cosecant-squared reflector type, a waveguide horn being used as a primary radiator. Since the IFF antenna is affixed to the radar antenna, azimuth co-ordination is automatically established. For information on IFF interrogating and responser circuits, see the instruction book for the IFF equipment in use.

Echo signals, picked up by the antenna during the interim between transmitted pulses, are conducted back to the RF coaxial system, where the first of two TR cavities in an assembly picks up the signal. The cavity includes a TR tube which effectively shorts the circuit during transmission. The magnetron is prevented from absorbing energy during reception by adjustment of the position of the receiver cavity relative to the magnetron in the RF coaxial system.

Echo signals are passed on to the second TR cavity, which also includes a TR tube. This cavity provides an additional short across the circuit to absorb RF which leaks by the first cavity. The received signals then pass through a harmonic attenuator. The attenuator absorbs transmitter harmonics which leak by the two cavities. From the harmonic attenuator, the echo signals pass on to a crystal mixer, where the signals are converted to 60-Mc energy by use of a triode (lighthouse-type) local oscillator.

The 60-Mc signals from the signal mixer are first amplified by an IF preamplifier and then passed on to the main 60-Mc IF amplifier. For normal radar operation, the signals are demodulated into video and passed on to a video amplifier and limiter. The video is further amplified in the azimuth and range indicator, where the signals are displayed on both PPI and A scopes.

When MTI is in use, the received signals, after amplification at 60 Mc, pass through MTI circuits which effectively cancel clutter (fixed target) signals and thus reveal moving target signals. These signals are then passed through the video circuits used for normal radar operation to the PPI and A scopes.

a. BASIC MTI THEORY.

In all radar systems, the received RF signal voltage bears a definite phase relationship to the RF voltage of the corresponding transmitted signal. The phase depends on the distance between the radar antenna and the target (see figure 2—2). The upper diagram shows the echo returning in phase (0 degrees) with the radio-frequency wave of the transmitted pulse. The lower diagram shows the different phase that results when the echo returns from a slightly more distant target.

In general, when the radar antenna itself is fixed, fixed objects produce echoes with a fixed phase relationship from one receiving period to the next, whereas moving objects produce echoes which have a different phase relationship from one receiving period to the next. It is by taking account of this difference in phase between successive receiving periods that the MTI circuits can discriminate between fixed and moving targets.

The method used to derive MTI signal information for radar indicator presentation is as follows:

(1) The echo signals are converted in conventional superheterodyne fashion to an intermediate frequency of 60 Mc, after which they are amplified and then limited to remove amplitude variations.

(2) A 60-Mc reference signal is generated by an oscillator and phase locked to a sample of the transmitted radar pulse that has been converted to 60 Mc by the same superheterodyne local oscillator used to convert the echo signals. The reference-signal generator, which

is not to be confused with the superheterodyne local oscillator, is called the coherent oscillator or "coho."

(3) Both the 60-Mc echo signal and the 60-Mc reference signal are applied to a phase detector, which responds to the phase difference between the two signals applied to it.

(4) The phase detector produces a video pulse having the timing and duration of the 60-Mc echo signal. The amplitude and polarity of the video signal is determined by the phase difference between the echo signal and the reference signal. Since both conversions to 60 Mc are performed by the same local oscillator, the two 60-Mc signals have the same phase difference as the two r-f signals from which they were derived. Hence, the video output of the phase detector represents the phase difference between each transmitted radar signal and the corresponding radar echo.

(5) A 9-Mc CW signal (carrier) is generated and the video signal resulting from the phase detection is used to amplitude-modulate it.

(6) The amplitude-modulated carrier is amplified and distributed to two channels called, respectively, the delayed channel and the non-delayed channel.

(7) The signal in the delayed channel is delayed for a period that is exactly equal to the time between radar pulses (approximately 2500 μs). The delayed signal is then amplified and the video signal is recovered in an amplitude-modulation detector.

(8) The signal in the undelayed channel is amplified and detected in a similar manner. The undelayed channel has exactly the same over-all gain and other electrical characteristics as the delayed channel, except that it introduces no delay.

(9) The delayed and undelayed video signals are combined in opposite polarity; i.e., subtracted one from the other. If the two signals are identical in amplitude, they cancel and no output results. If the two amplitudes are different, the difference is the output signal. It is important here to realize that the two signals being combined represent, respectively: (1) the radar echo received during the present pulse-repetition period, which travels via the undelayed channel; and (2) the echo received during the previous period, which travels via the delayed channel.

(10) The amplitude difference between the two video signals, which is itself a video signal, is amplified

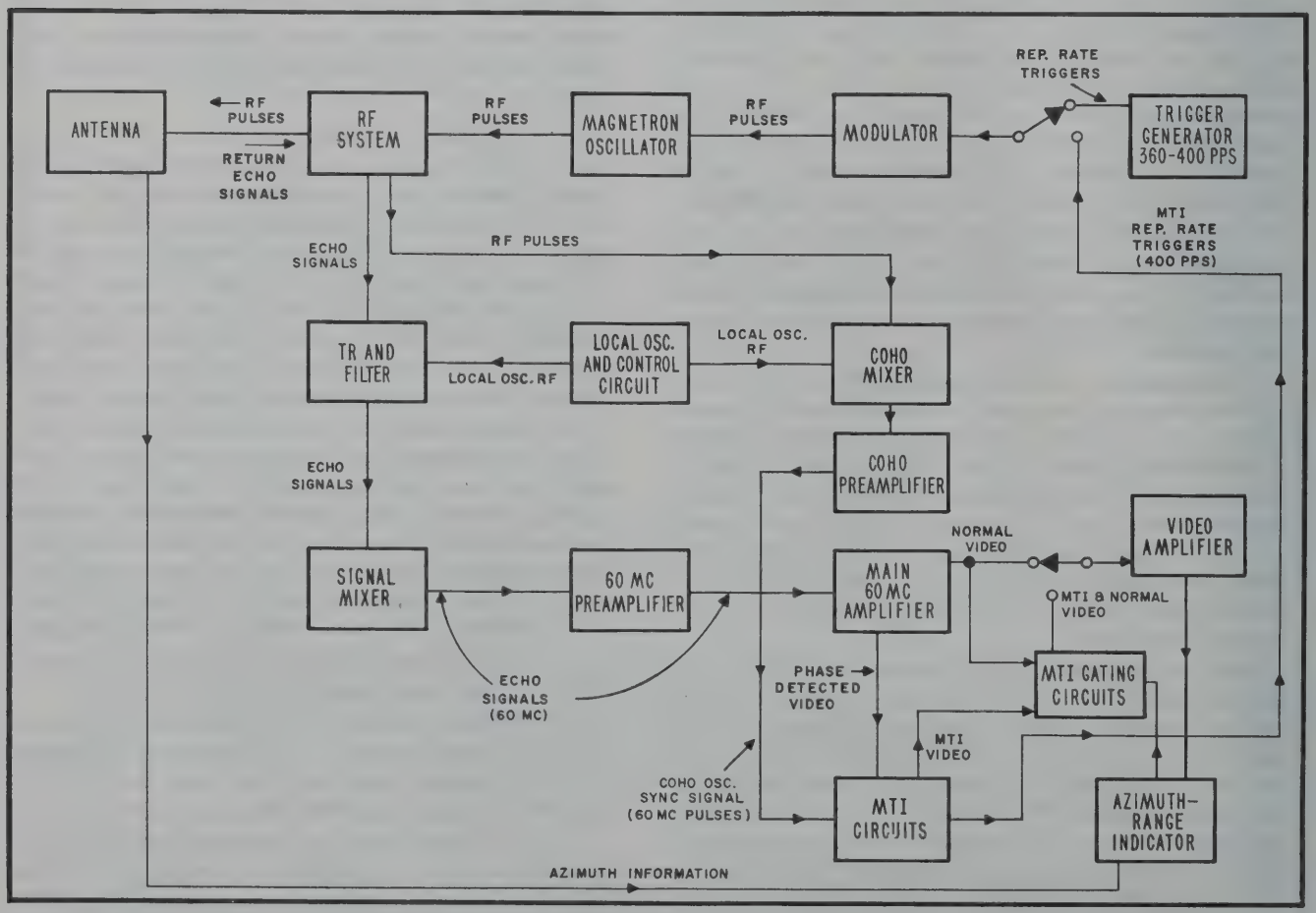

Figure 2–1. AN/TPS-1G Block Diagram

and applied to the A scope and PPI scope for display.

In analyzing this procedure, it can be seen that signals from fixed targets, which generally have an unchanging phase relationship to the transmitter pulse from one pulse period to the next, produce in the phase detector recurring video signals of the same amplitude and polarity. When one video pulse is combined with a preceding pulse of opposite polarity, the video signals cancel and no information is passed on to the radar indicators.

Signals from moving targets, on the other hand, generally have a varying phase relationship to the transmitted pulse, with the result that signals from adjacent periods produce signals of different amplitudes in the phase detector. When such pulses are combined after passing the cancellation circuits, the difference in signal amplitudes provides a video signal, which is passed on to the PPI and A scopes.

Note

The foregoing analysis applies to gated-MTI operation during that portion of the pulse-repetition period when the MTI circuits are active.

There is a condition where the MTI circuits do not produce moving target information. This condition occurs when the relative movement of a target is at a speed which produces a phase difference corresponding to an exact number of half wavelengths between pulses. In this case, although the object is moving, the phase difference between transmitted and received signals is fixed, and therefore, no signal will be produced for radar indicator displays. The only adverse effect is a tendency to lose objects which move a distance of an exact number of half wavelengths during the time between pulses. This occurs at certain definite relative speeds (blind speeds) which are determined mainly by the wavelength and pulse rate. Figure 2–3 shows how the video level (after passing through the cancellation circuits) varies for the relative speed of objects. However, moving targets traveling at blind speeds may still produce detectable signals. The signals result from varying-phase reflections such as those produced by a propeller.

b. MTI CIRCUIT REQUIREMENTS.

The following circuit requirements are necessary to accomplish satisfactory MTI operation. These considerations are in addition to those required for normal radar reception:

(1) The pulse repetition rate or pulse timing must be exactly equal to the timing of the delay in the supersonic delay line and associated signal circuits. This is accomplished in the signal comparator by using the delay line not only for delaying signals but also for setting the pulse repetition period.

(2) The 60-Mc reference signal must be synchronized with the phase of the transmitter signal. The coherent oscillator which develops the 60-Mc signal is a stable 60-Mc CW oscillator and is phase-locked by transmitter pulses received via the coho mixer.

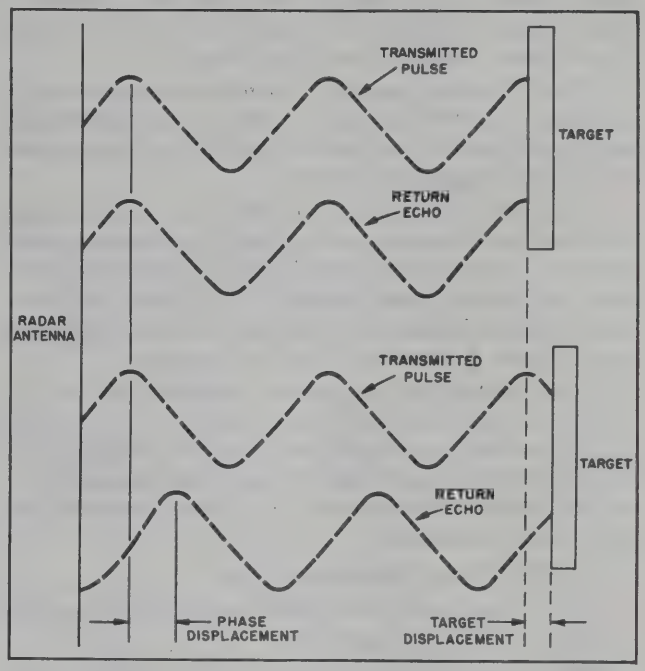

Figure 2–2. Phase Relationship of Transmitted Signals vs. Echo Signals

(3) Amplitude variations of received signals should be minimized to afford maximum detection capability. The last three stages of the 60-Mc IF amplifier are designed to limit the amplitude of signals received from the receiver-transmitter preamplifier.

(4) The signal output levels of the delayed and undelayed signal circuits for cancellation of fixed targets must be maintained. An AGC (automatic gain control) circuit helps maintain the balance of the signal levels of the two circuits by controlling the gain of the amplifier in the delayed circuit.

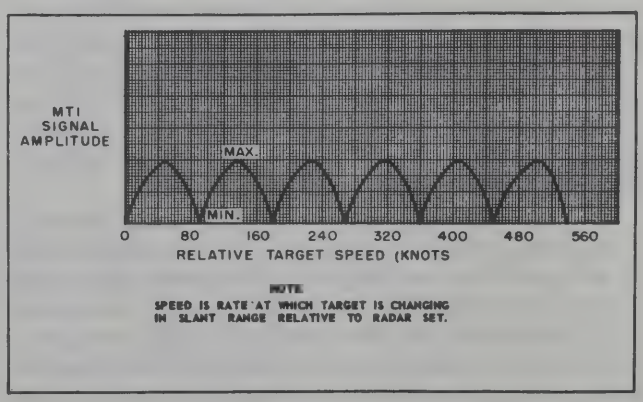

Figure 2–3. MTI Signal Amplitude vs. Relative Target Speed

(5) The over-all transit time of the pulse timing circuits and of the delayed-signal circuits must be the same. A small fixed delay is added in the receiver-signal output circuit of the delayed amplifier, the amount of delay being sufficient to compensate for the longer transit time of the pulse-timing circuit.

(6) A means must be provided for conveniently adjusting the MTI circuits. A meter, a meter switch, and panel controls are included which provide a simple means of aligning the circuits.

(7) Both the transmitter and local oscillator signals must be as free as possible from jitter and frequency and/or amplitude modulation. Dc is used for the filament supplies of both magnetron and local oscillator tubes. Special consideration is given to the modulator pulse circuit to provide jitter-free operation.

(8) Arcing and magnetron frequency pulling in the RF transmission system must be kept at a minimum. This is partially accomplished by careful design of the RF transmission line system. (This design is determined by the nominal characteristics and power output of the transmitter magnetron.)

c. OPERATING LIMITATIONS.

A radar system without MTI generally has certain limitations in detecting objects.

The vertical radiation pattern of the antenna generally contains several null points. The nulls are quite sharp but at long ranges a considerable area exists where aircraft may not be detected. The nulls are caused by ground reflections which cancel the free-space radiation in areas where the free-space radiation and the ground reflection are out of phase. Figure 2—4 shows an actual pattern of an experimental model of Antenna AS-673/TPS-1E. The curve represents maximum ranges observed on a single-engine propeller driven aircraft (AD-4N) flying over land.

Also, with a radar system without MTI, objects could remain undetected due to an insufficient number of pulses striking the object. The ability of the eye to detect a target on the indicators is dependent on the number of pulses striking the target during the time the antenna is scanning it. The number of scans is dependent on the pulse rate, antenna horizontal beamwidth, antena rotation speed, and the speed and direction of the target. With the pulse rate and beamwidth fixed, the ability to detect an object is dependent entirely on antenna rotation speed and the movement of the target. In general, slower antenna rotation speeds increase the ability to detect weak targets.

Another possibility, often overlooked, is that of losing a target in a blind area caused by an obstruction, such as a mountain or building, or in blind areas beyond the horizon. Obviously the altitude of a target determines to a great extent the likelihood of a target being lost in these blind areas. As the height of the target is not known, it is often difficult to determine whether or not target loss is due to its altitude.

The ability of the MTI to detect moving targets and/or to differentiate between fixed and moving targets is

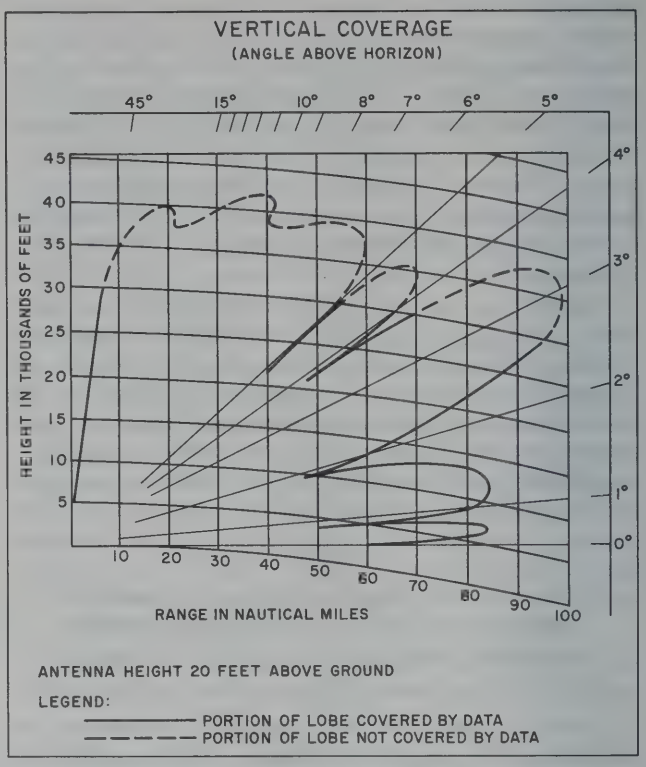

Figure 2—4. Vertical Radiation Pattern Characteristics

dependent on a number of additional factors. If the moving target is in an area free of clutter (fixed targets), the main limiting factor is the optimum relative speed (89.4 knots and multiples thereof) of the target for the repetition rate and RF wavelength.

Figure 2—3 shows this relationship of the amplitude of MTI video signals developed (before video limiting) versus the speed of the target. Blind spots appear at relative speeds of 89.4 knots and integral multiples thereof. It should also be noted that maximum MTI video signals are developed at speeds of 44.7 knots removed from blind speeds. The values given are approximate for the wavelength (23 cm) of the transmitted signal at mid-band and at a pulse repetition rate of 440 pps.

The first blind speed or velocity at which the resultant MTI video signal is zero, for other values of wave length and pulse repetition rate, can be determined from the formula:

$$v = \frac{\lambda f_\gamma}{102.9}$$

where:

$v =$ lowest blind speed of the target in knots.

$\lambda =$ wave length of the transmitted signal in centimeters.

$f_\gamma =$ pulse repetition rate in pulses per second.

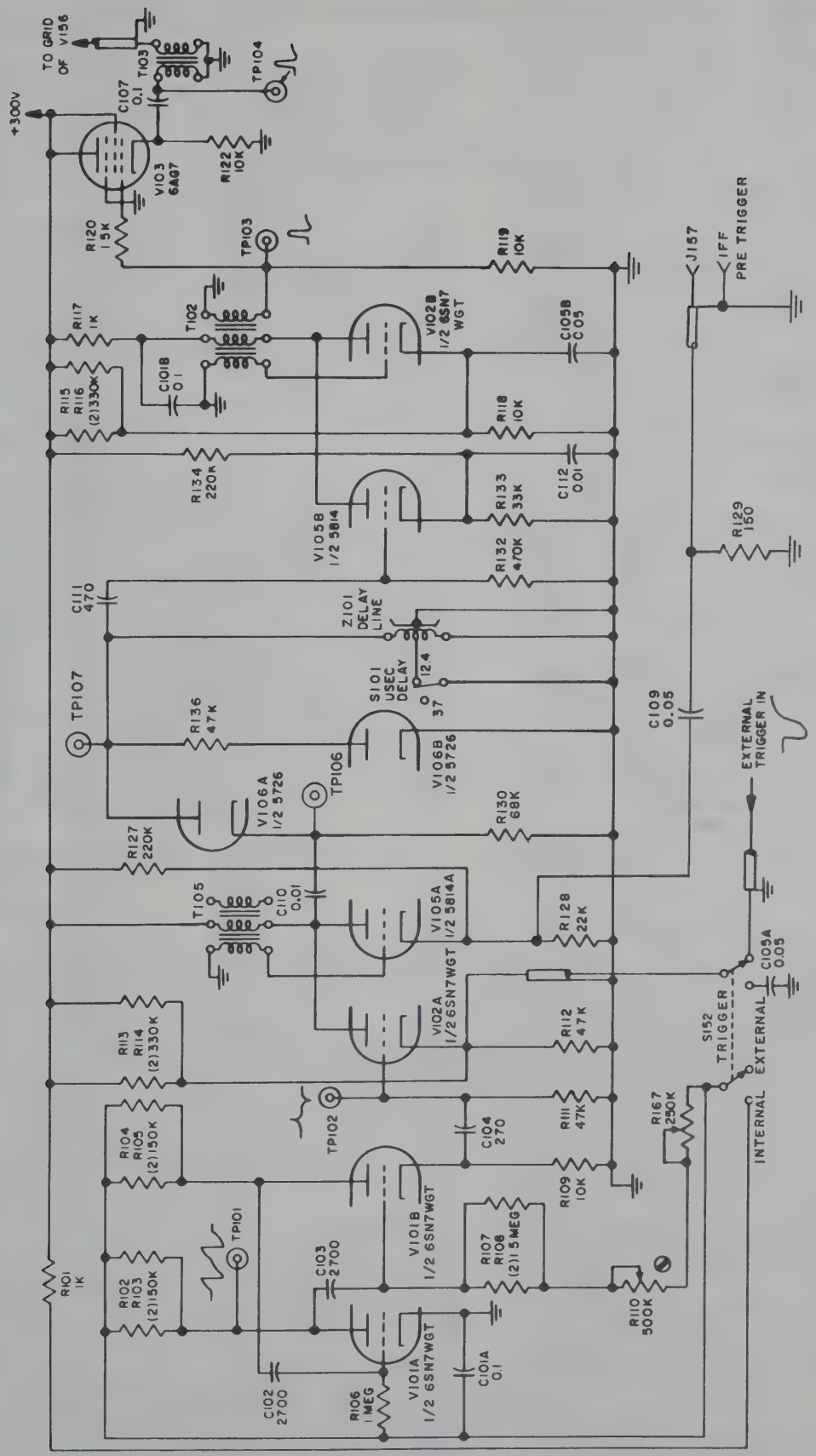

Figure 2–5. Modulator Trigger Circuit

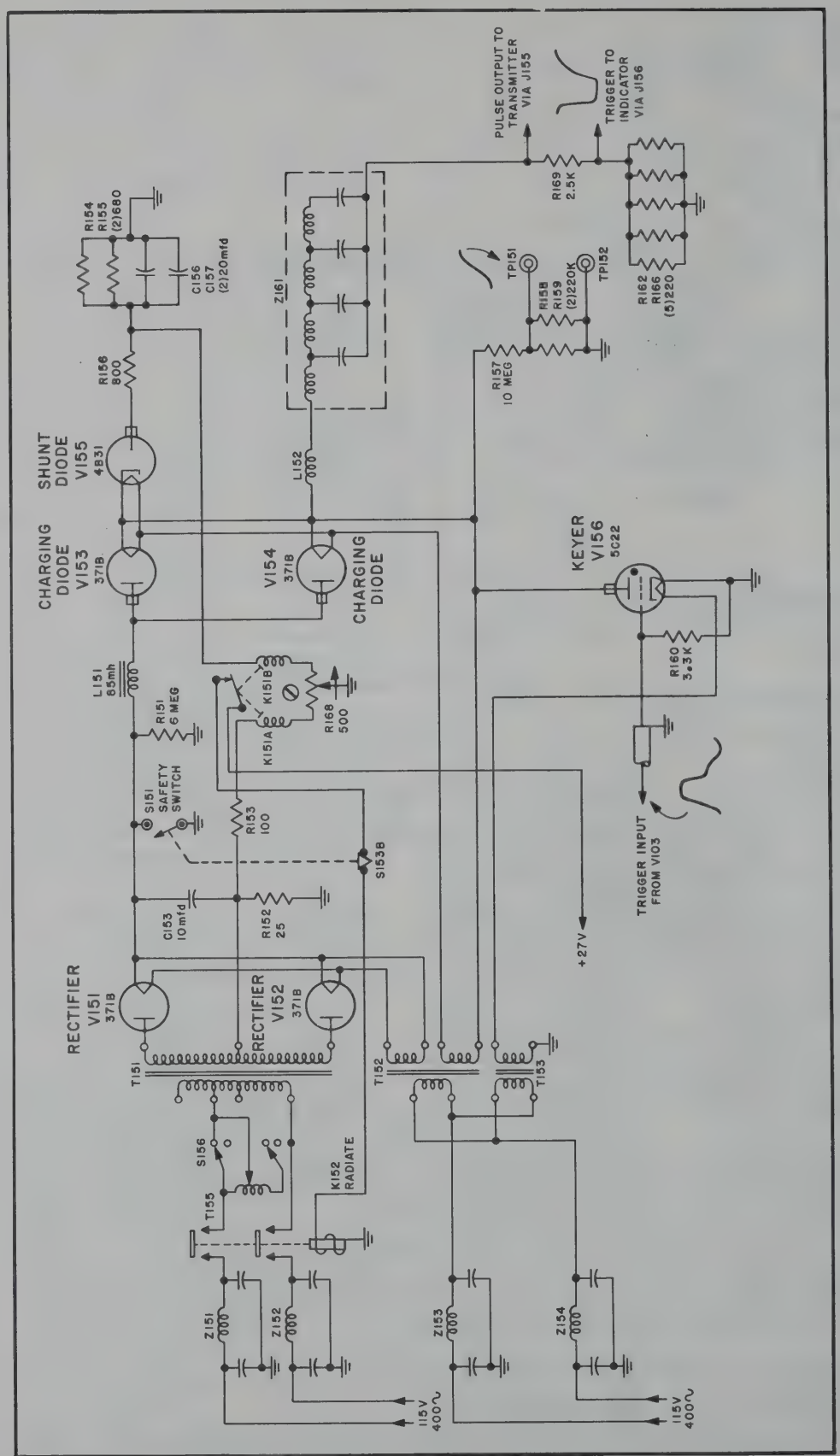

Figure 2–6. Modulator Output Circuit

Other blind speeds occur at integral or whole multiples of the lowest blind speed (v).

Velocities at which the resultant MTI video signal is maximum occur midway between the blind speeds. For example: If the lowest blind speed is 89.4 knots and the second blind speed is 178.8 knots, the MTI video signal will be maximum at 44.7 knots and again maximum at 134.1 knots. See figure 2–3.

If the moving target is in a clutter (fixed-target) area, the ability to detect the target is dependent on several factors. Most of these factors have to do with the limitations of the MTI circuits in balancing out fixed-target signals. With the antenna at rest, the subclutter visibility (ability to detect moving targets in the presence of fixed targets) is limited at moving-target signal levels of not more than 26 db below that of clutter signals which are at or above the limit level of the 60-Mc amplifier.

Subclutter visibility, as far as the radar circuits are concerned, is mainly determined in most cases by the stability of the local oscillator. Stability is defined by the degree of local oscillator amplitude and/or frequency change from one receiving period to the next.

One factor which seems to produce the greatest limitation on the ability to detect moving targets in the presence of fixed targets is the rotation of the antenna. As the antenna rotates, the amplitude and phase of clutter signals change according to shape of the antenna pattern and the RF phase distribution of the pattern. Even with slow antenna rotation, amplitude and phase changes of clutter signals can be sufficient to prevent complete cancellation of the clutter signals.

2. RADAR MODULATOR MD-144A/TPS-1D.

(See figure 7–111.)

a. GENERAL.

The main circuitry of the radar modulator consists of trigger, modulator, and modulator high-voltage power supply circuits. Triggers are developed at the free-running multivibrator or by triggers received externally from the signal comparator. TRIGGER switch S152, on the front panel of the modulator, provides a simple means for shifting from external to internal triggers.

The triggers developed from either source trip a thyratron tube which develops high power pulses. These video pulses then key the magnetron oscillator in the receiver-transmitter unit.

External triggers from the signal comparator are normally used for both MTI and normal radar operation. Triggers from the multivibrator are used only in an emergency in the event of the failure of external triggers. When so used, only normal radar operation is possible.

b. TRIGGER CIRCUITS. *(See figure 2–5.)*

The trigger circuits are contained in one subchassis in the modulator unit. The trigger circuits develop triggers for tripping the hydrogen thyratron gas discharge tube (keyer tube) V156.

When TRIGGER switch S152 is set for internal triggers, plate voltage is applied to the free-running multivibrator consisting of V101A and V101B. The frequency of the multivibrator is adjustable from 360 to 400 cycles by means of REP. RATE CONTROL R110. Coarse adjustment for calibration of R110 is accomplished by R167, which is connected in series with R110.

The positive signal (approximately square-wave) output from the cathode of V101B is differentiated by C104 and R111, and is coupled to grid of the blocking oscillator trigger tube V102A. The trigger tube V102A is operated with approximately −2.5-volt effective bias, and the positive spike of the differentiated multivibrator signal is amplified by V102A. The amplified spike trips the blocking oscillator V105A through the 2-3 winding of transformer T105. Blocking oscillator V105 is kept from self-oscillating by the bias voltage developed by the voltage divider consisting of R127 and R128.

The positive pulse at the cathode of V105A is coupled through C109 to the IFF PRE-TRIGGER jack J157 on the front panel of the modulator. This trigger is used in IFF operation to synchronize the operation of the IFF equipment with the radar.

The negative pulse at the plate of V105A is coupled through C110 and clipper diode V106A to delay line Z101. Delay line Z101 is a shorted line and produces a return pulse of opposite (or positive) polarity delayed 12.4 or 37.0 microseconds, as set by the USEC DELAY switch S101. The positive return pulse brings V105B into conduction. The amplified negative pulse at the plate of V105B trips the blocking oscillator V102B through the 3-5 winding of the blocking oscillator transformer T102. Blocking oscillator V102B is kept from self-oscillation by the use of high bias (approximately cutoff) developed by the voltage divider consisting of R115/R116, and R118.

When the TRIGGER switch is set for external repetition rate control, plate voltage is removed from the free-running multivibrator V101A and V101B, and negative trigger pulses are received from the signal comparator and applied to the cathode of V102A. The operation of the other stages in the trigger chassis is the same with external triggers as with internal.

The fast-rise triggers developed by the blocking oscillator are applied as positive triggers from the output of T102 to the grid of the cathode follower V103. The output of V103 is fed to the grid of thyratron keyer V156 through cathode output transformer T103. The output transformer, besides providing a low impedance circuit, buffers the kicks from the thyratron keyer.

c. MODULATOR CIRCUIT. *(See figure 2–6.)*

Besides the type-5C22 thyratron keyer tube (V156) the modulator output circuit consists of charging choke L151, charging diodes V153 and V154, shunt diode V155, and pulse line Z161.

Voltage from the high-voltage power supply is applied through charging choke L151 and charging diodes V153 and V154 to pulse line Z161. The combination of

charging choke L151 and pulse line Z161 is resonant at approximately 200 cycles (about half the repetition rate). Thyratron V156 functions as an electronic switch which, when fired by the trigger pulse, effectively grounds the pulse line at the charging diode end. At this time the charge on the pulse line discharges a squarewave voltage through the series circuit consisting of the thyratron and the primary windings of pulse transformer T502 in the transmitter. As the input impedance of the pulse transformer matches the pulse-line impedance and the impedance of the conducting thyratron tube is nearly zero, the pulse line efficiently transfers its energy into the transmitter. The discharge time (pulse duration) is approximately 2.0 microseconds.

The shunt diode V155 is connected across the pulse line so that no current will pass during charge time but will dampen any oscillations (tails) which might develop from the residual energy left in the pulse line and pulse transformer after the thyratron extinguishes. Most of the residual energy is dissipated in the V155 series resistor R156. Actually, damping by V155 occurs slightly below ground potential because of the storage capacity of C156 and C157, connected in series with V155. The steady negative voltage developed across C156 and C157 is applied to relay K151B, the action of which is explained below.

The charging choke L151 has sufficient impedance to isolate the power supply during discharge time and thereby permit the thyratron to discharge the line down to the thyratron extinction point. The charging rate is a sine-wave function, the rate being determined mainly by the value of L151 and the sum of the pulse-line capacitors. Because of resonant charging, the pulse line capacitors are charged to nearly twice the power supply voltage, or 10,000 volts. The charging diodes V153 and V154 prevent discharge of the capacitors back through the power supply. As the impedance of the pulse line matches the impedance of pulse transformer T502 in the transmitter, one half of the voltage (approximately 5000 volts peak) will appear across the pulse line and T502 when the thyratron fires.

d. HIGH-VOLTAGE POWER SUPPLY. *(See figure 2–6.)*

The high-voltage power supply receives 115-volt 400-cycle power through contactor relay K152 either directly through S156 or through magnetron aging variac T155. The a-c power is converted to approximately 5500 volts dc for application to the modulator output circuits. Filters Z151 through Z154 are connected in series with the primary power to transformers T151 and T153 to suppress radio interference. With S156 in the OUT position, primary power is applied directly to the primary winding of T151. In the IN position, T155, the magnetron aging variac, is connected across the 115-volt line and the output of the variac is applied to the primary of T151. Full instructions for aging the magnetron are given in Section 7, paragraph 9.*b*(3)(*b*). T151 steps up the voltage and applies it to the plates of V151 and V152, which are connected as a conventional full-wave rectifier. The primary of T151 is tapped to provide a means of adjusting the modulator pulse output voltage over a range of ±5%. Test point TP151 provides a means of checking the charging voltage.

Protective relay K151A/B removes primary power from plate transformer T151 in the event of excessive current in either the high-voltage power supply or the shunt-diode circuit (V155) (see figure 2–6). When K151A/B operates, it removes control voltage from contactor relay K152, causing it to open and thus remove primary power from T151. The modulator may be re-energized after operation of the overload relay by pressing the RADIATE ON button at the indicator. Overload relay operation does not cause the time-delay relay to recycle.

e. FUSES. *(See figures 5–1 and 5–2.)*

Two fuses located in the power supply unit protect the modulator unit. A 30-ampere fuse, F411, is connected in one of the 115-volt 400-cycle leads to the high voltage power supply, and protects T151 and T155. A 6.25-ampere fuse, F410, protects filament transformers T101, T152 and T153. All fuses have blown-fuse indicators.

f. RF NOISE SUPPRESSION. *(See figure 2–6.)*

All leads (the ground lead excepted) carrying current to the modulator unit contain filters Z151 through Z159 to suppress conducted noise which might pass into external circuits and thence radiate to cause radio interference. Radiated noise is minimized by the use of shields which make ground contact through a series of clips.

g. BLOWER AND HEATER. *(See figure 7–111.)*

Blower B151 provides cooling when the internal temperature of the modulator unit rises above 25°C (77°F) It is thermostatically controlled by S154. Thermostat S155 energizes heaters HR151 and HR152 when the temperature falls below 0°C (32°F). Thermostats S154 and S155 have 25°C and 15°C differentials (respectively) between their closing and opening points.

h. PROTECTIVE RELAY. *(See figure 2–6.)*

Protective relay K151A/B contains two coils—one connected in the ground return of the high-votage power supply and the other in the ground return of the shunt-diode circuit. The two coils are so connected that the field of one coil bucks the field of the other. Potentiometer R168, connected in the ground leads of the coils, provides a balancing adjustment. The contacts are normally closed and the relay operates to open the contacts. The contacts of K151A/B are connected in series with the control circuit which operates relay K152, which in turn supplies primary voltage to the modulator high-voltage power supply.

As the charging and shunt diode currents are correlated, most irregularities which could be experienced in the modulator and transmitter circuits result in a change in the ratio of the two currents. As K151A/B is adjusted for a balance of currents in its two coils, irregularities will trip K151A/B, thus operating K152, which opens the primary supply to the high-voltage power supply.

Variation in line voltage does not cause K151A/B

to operate because the balance in coil currents is not disturbed. However, arc-overs in the modulator or transmitter circuits (other than the occasional sputter heard in the RF system) cause an unbalance and K151A/B operates.

For example, should an arc-over occur in the pulse line, the charging current would increase and, at the same time, the shunt diode current would decrease and K151A/B would operate. A gassy magnetron would cause a similar effect. Another example of a different nature is that of shunt diode burn-out. In this case, the charging current would remain near normal but no shunt diode current would be present.

In the same manner, K151A/B provides protection for the following conditions:

Shorting of magnetron

Failure of magnetron to oscillate

Mode-skipping of magnetron

Excessive sparking of magnetron

Continuous conduction of thyratron modulator

Open coil in relay K151A/B itself

i. INTERLOCKS.

Interlock S153A/B, connected in series with the control circuit for K152, is mounted on the rear of the modulator chassis and is arranged to remove and ground the high-voltage circuit of the modulator if the chassis is pulled more than about an inch out of its case.

Safety switch S151 is arranged so that it closes after S153A/B opens, discharging the high-voltage power supply filter capacitor C153 through R152. Three high-voltage warning lights, I151, I152, and I153, are mounted at prominent points on the unit chassis. These lamps glow when voltage is being applied. A safety switch disabling device is mounted on the right side of the unit so that the latter may be inspected under operating conditions. The device consists of a lever which hinges outward in such a fashion that the safety circuit is reinstated when the unit is again closed.

3. RADAR RECEIVER-TRANSMITTER RT-212A/TPS-1D.

(See figure 7—117.)

a. GENERAL.

The radar receiver-transmitter receives pulsed power from the modulator unit. The pulsed power is converted into RF energy by a tunable-type 5J26 magnetron oscillator, the output of the oscillator being delivered to the antenna through the transmit-receive switching system which includes two TR cavities connected in series.

The incoming signals pass through both the dual cavities as well as a harmonic filter. The signal voltage then beats with the applied local oscillator signal voltage, and is fed to the mixer crystal to produce a 60-Mc signal. This 60-Mc signal is amplified in the IF preamplifier assembly, the output being fed through coaxial cable to the main 60-Mc IF amplifier in the signal comparator.

The coho mixer assembly picks up a minute portion of the transmitter pulse signal from the RF system and feeds a 60-Mc pulse signal, produced by mixing the transmitter signal and the local oscillator signal, to a one-stage preamplifier. The 60-Mc pulse signal is fed to the coherent oscillator (signal comparator) for coherent oscillator phase synchronization.

The main circuits of the unit consist of magnetron oscillator V502, magnetron filament supply (CR501), cavities assembly RF503, harmonic filter Z509, signal mixer CR503, TR keep-alive supply (V501), RF assembly RF501, coho mixer RF502, local oscillator and control circuit assembly U501, signal preamplifier assembly U221, coho preamplifier assembly U502, and local oscillator filament voltage regulator TY501.

b. MAGNETRON. *(See figures 2—7 and 2—9.)*

Two-microsecond video power pulses from the modulator unit are applied to pulse transformer T502, which steps up the voltage of the pulse to approximately 28 kv. This represents a peak input pulse power of approximately 1.5 megawatts, the average input power being approximately 1200 watts for a 0.0008 duty cycle (2.0-microsecond pulse at 400 pps). The pulsed power is then applied to both sides of the magnetron V502 heater circuit, the cathode of the magnetron being connected internally to one side of the heater circuit.

Since the polarity of the pulse is negative, the heater circuit and the cathode of V502 are both driven negative approximately 28 kv in relation to the V502 plate, which is at ground potential. V502 then oscillates to develop microwave energy, which is fed to output connector J502 by way of the coaxial line of RF assembly RF501.

The peak RF output power is at least 0.5 megawatt, which represents a peak RF voltage of approximately 5000 within the RF assembly and the antenna transmission line.

The average d-c plate current (42 ma nominal) of V502 is measured on the unit panel by M502, which is connected in series with the d-c ground of the high-voltage winding of pulse transformer T502.

c. MAGNETRON FREQUENCY STABILITY.

The frequency stability of most oscillators, including a magnetron oscillator, is determined to a large extent by the characteristics of the load into which the oscillator is working. In general, the frequency stability of the magnetron in Radio Set AN/TPS-1G is satisfactory when working into the RF system of the tower assembly and also when working into the antenna through an extended transmission line up to 150 feet.

However, unstable operation due to magnetron oscillator frequency "skipping" may be experienced occasionally at one or more points in the operating frequency band. Skipping is a condition in which the magnetron oscillates on either of two frequencies at random. Skipping may occur during a pulse period, from pulse to pulse, or in a combination of both.

Skipping is a phenomenon caused by "long-lines effect," which, in turn, may be briefly defined as an effect produced by reflected voltage (standing waves) on an

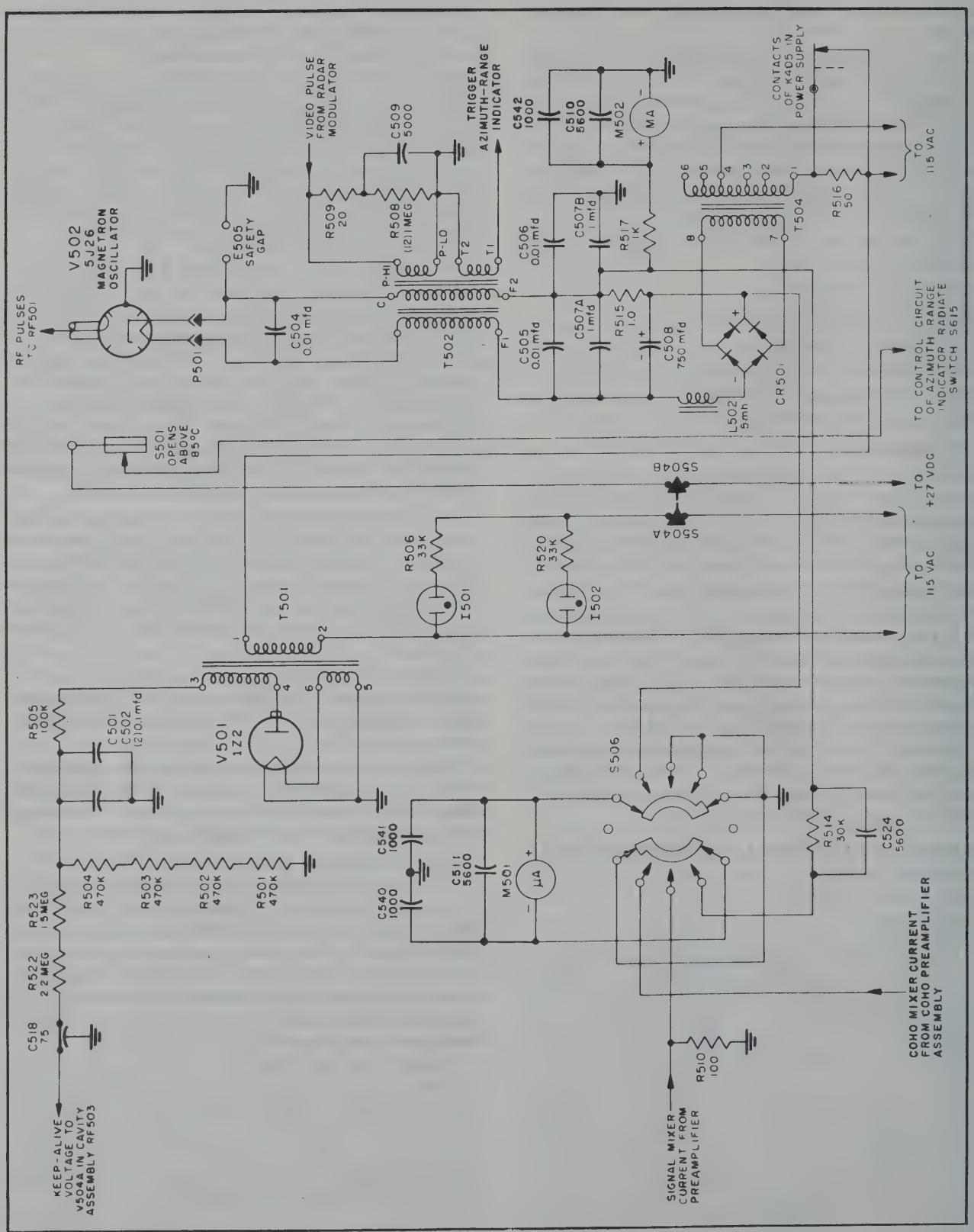

Figure 2–7. Transmitter Circuit

oscillator which is feeding a load through a transmission line.

As skipping occurs at more or less definite phase relationships (reflected voltage vs. oscillator voltage), points of unstable frequency occur as the frequency is varied over the operating frequency range. The number of points is determined by the length of the transmission line, long lines producing more unstable points than short lines. The unstable points are approximately one or two megacycles wide for the frequency band in use.

The existence of skipping is determined by the voltage standing-wave ratio (VSWR) of the transmission line system (including the antenna) compared to the VSWR of the magnetron in use. Because of the allowable manufacturing tolerances, these values are not fixed quantities. For an average RF system using the short transmission line furnished with the equipment and an average magnetron, there is little likelihood of experiencing skipping. If skipping is possible with a particular combination, the condition quite likely would be encountered infrequently because of the narrow frequency band over which the phenomenon occurs.

When points of instability are encountered, the obvious way to overcome the condition is to tune the magnetron oscillator frequency slightly away from the point of instability.

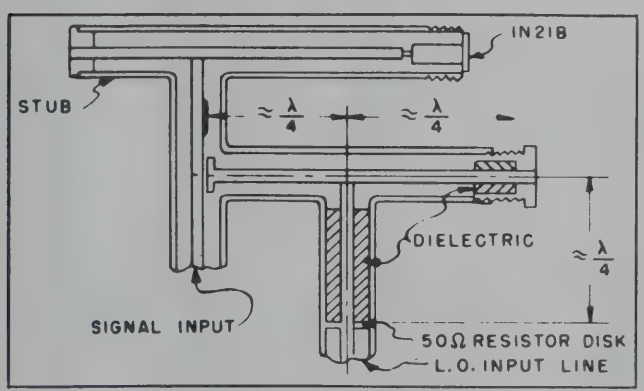

Figure 2–8. Coho Mixer Assembly

d. RF SYSTEM. *(See figures 2–7 through 2–11.)*

(1) GENERAL.

Because of the power and frequency involved, special considerations are necessary in the design of the duplexing portion of the RF system to ensure proper protection to the signal mixer crystal. Protection is necessary not only at the fundamental frequency of the transmitter but also at transmitter harmonic frequencies. A controlling factor in the duplexing system design is the effect of the expedients used for crystal protection on the over-all noise figure, which experience indicates should not exceed 9.5 db (taking into consideration a nominal duplexer insertion loss of 1.5 db).

The AN/TPS-1G duplexing system consists of dual TR cavities and a harmonic attenuator. Magnetron output circuit isolation is obtained by the use of proper spacing (adjustable) between the TR cavity and the magnetron output circuit. This arrangement provides adequate crystal protection and permits noise figures as low as 7.0 db to be obtained, the actual figure being controlled to a certain extent by the mixer crystal. With average type 1N21C crystals, the noise figure should not exceed the 8.0 db noise figure.

The RF plumbing consists, basically of a length of rigid coaxial line, RF501. The output connector of the magnetron is attached to one end of the line, while the other end of the line terminates in the RF output connector of the unit. The coho mixer (RF502), the directional coupler (part of RF501), and the first of the dual TR cavities of RF503 are coupled to the line in that order, starting from the J502 end of the line.

The coho mixer, RF502, is coupled to the line by a small hole or iris at the point of attachment opposite to the directional coupler. The size of the hole, which adjusts the degree of coupling, is predetermined so that the 60-Mc output level of the coho mixer is approximately 0.5 volt (2.0-microsecond pulses).

The directional coupler provides an RF pickup which supplies a small amount of transmitter RF energy via P/J504 and a coaxial cable to RF TEST jack J501 on the unit panel. The coupling is such that the transmitter pulse is attenuated approximately 30 db. Thus, J501 may be used for checking transmitter frequency and transmitter power, and for connection of Tuned Cavity TS-172B/UP. When the echo box is connected to J501, its ringing signal is coupled back into RF501 by the directional coupler, thus providing an artificial echo signal for receiver tuning.

Coupling to dual cavities is made through a portion of a transverse slot extending approximately 8 in. along and 150° around the outer conductor of RF501 (see figure 2–10). Contact fingers attached to the outer conductor and around the opening provide electrical contact to the dual cavities assembly, which is mounted over the opening. A slot in the side of the first (V503A) of the dual cavities determines the degree of coupling to the line (see figure 2–11). The slot represents a 90° opening into the line and is the full width of the cavity.

The entire assembly can be slid along the line to obtain optimum pickup for the frequency to which the transmitter is adjusted. Sliding RF503 along the line is equivalent to moving the pickup slot. Thus, it is possible to vary the distance between the receiver pickup point and the magnetron output circuit. The optimum adjustment for a particular frequency (1220-1350 Mc) is the one which best isolates the magnetron output circuit from the receiver pickup (inner circuit).

When tuning the system, the optimum point is denoted by maximum receiver sensitivity, this being the point of minimum absorption of received signals by the magnetron and also the point of maximum transfer of echo signals to the receiver.

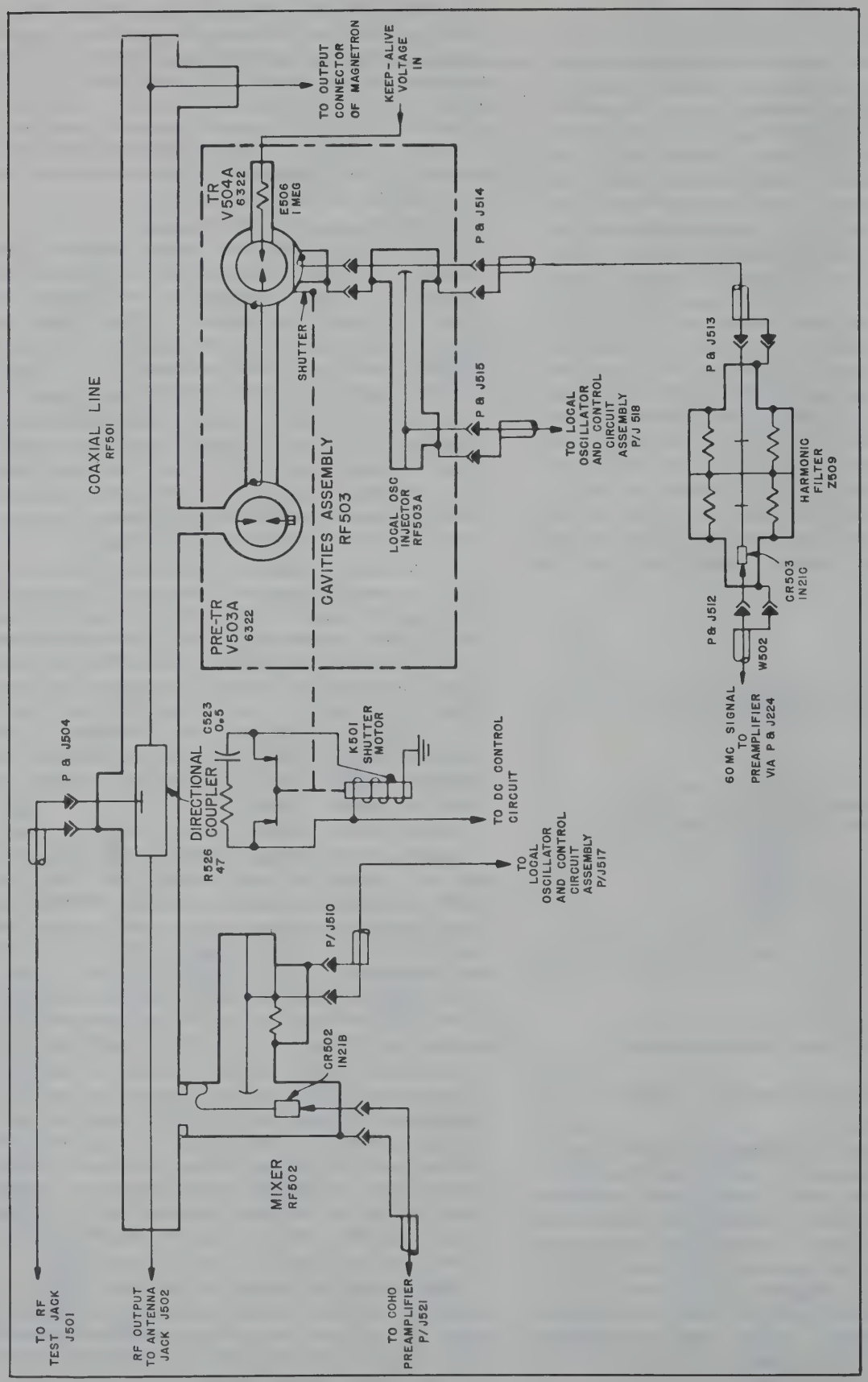

Figure 2–9. Receiver-Transmitter RF System

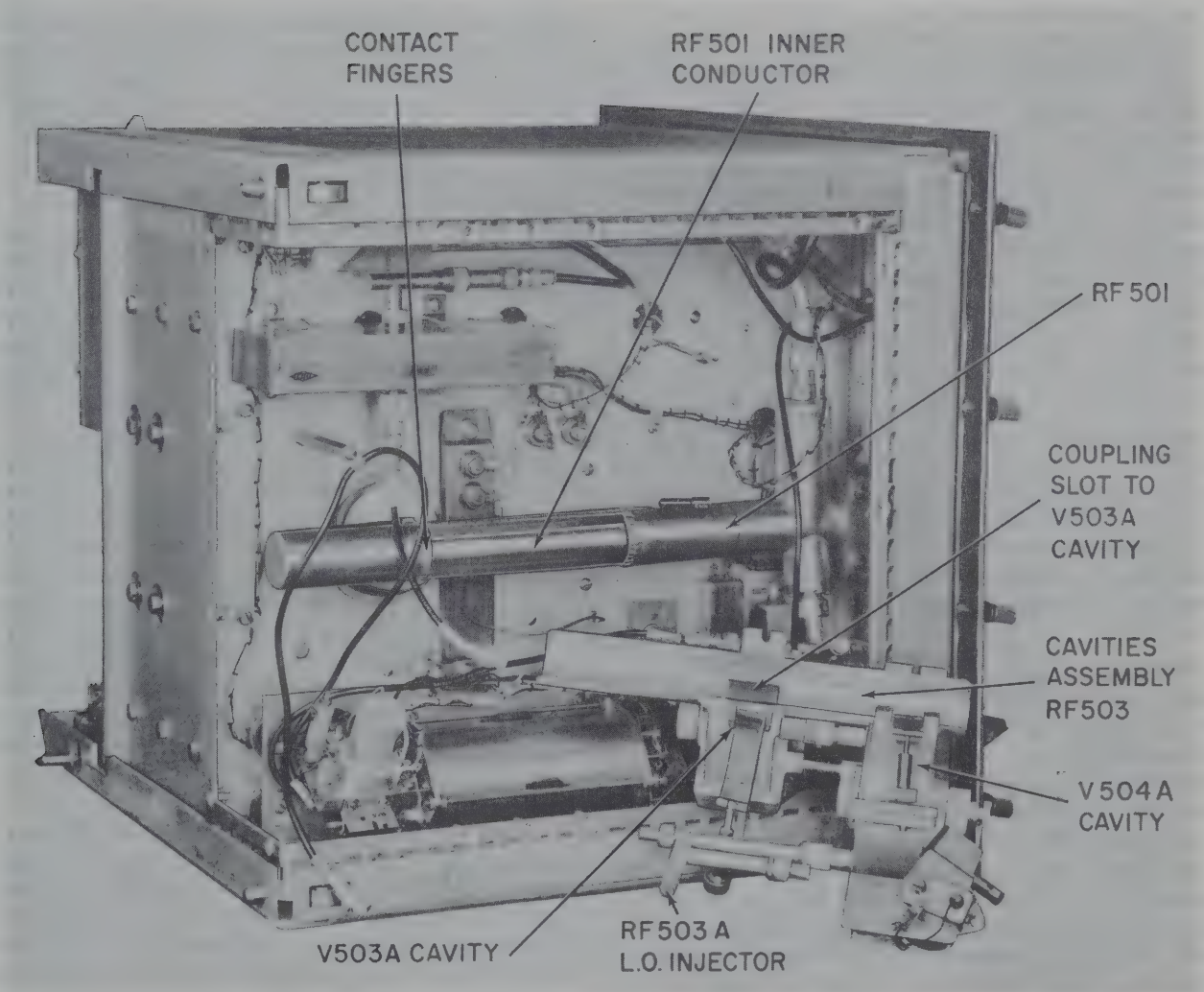

Figure 2–10. RF System Details

(2) COHO MIXER RF502. *(See figure 2–8, 2–9.)*

The coho mixer tuned circuit consists of a short length of coaxial line having broad-band characteristics. The line is fixed-tuned at mid-band and no tuning adjustments are required. The coho mixer crystal CR502 is connected into one end of the coaxial line, while the transmitter and local oscillator signals are capacity-coupled part way up the line. The local oscillator signal (set 60 Mc higher in frequency than the magnetron) and the magnetron pulse signal beat to produce a 60-Mc difference signal (pulse) at the output of the crystal mixer. This signal then goes to the coho preamplifier U502.

(3) CAVITIES ASSEMBLY RF503. *(See figures 2–8, 2–10, and 2–11.)*

Cavities assembly RF503 consists of two cavities, each containing a tunable-type (6322) TR tube V503A and V504A. The tubes are mounted at the centers of the cavities, which is the equivalent of being connected across the extreme or maximum voltage points of a tuned circuit. As the tuning knobs of the TR tubes mechanically vary the inter-electrode capacitance of the TR tubes, tuning of the cavities is obtained.

The bandwidth characteristic of the cavities is approximately 6 Mc. The over-all insertion loss of the cavities is 1.2 db.

The first cavity containing V503A, being coupled to RF501 by the slot, alternately picks up transmitter RF and echo signals. When a pulse from the transmitter is present, V503A being at the high-voltage point of the cavity, conducts and effectively shorts the cavity. (Because of the high voltage of the RF pulse, no TR keep-alive voltage is required to ensure conduction of V503A.)

Shorting of the V503A cavity reflects a short at the pickup slot on RF501 and, in effect, closes the slot so that transmitter pulse power is efficiently conducted to the antenna by way of the associated coaxial line. The conduction of V503A also effects a short at the input circuit of the receiver, the input circuit being represented by a pickup loop in the cavity of V503A.

As V503A does not represent a perfect short, and because of the high amplitude of the transmitter RF pulse, considerable RF voltage would leak by the V503A cavity into the receiver circuit. Therefore, the second cavity of V504A is used in the receiver input circuit. The cavity of V503A is coupled to the V504A cavity by a short, rigid coaxial line connected between the pickup loop of the V503A cavity and a similar coupling loop in the V504A cavity. As the RF voltage is of comparatively low amplitude at this point, keep-alive voltage is applied to V504A to ensure conduction.

The output of V504A is coupled to the mixer input circuit of the receiver (via the harmonic filter Z509) by a second pickup loop in the V504A cavity. Between pulse periods of the transmitter, V503A and V504A are not conducting, and received echo signals are picked up by the antenna and conducted to RF501. The signals then pass through the tuned circuits of both cavities to the receiver mixer circuit.

The cavity pickup loops are positioned in the V503A and V504A cavities at points of maximum magnetic fields, the coupling being essentially magnetic. The cavity of V504A is also provided with a shutter which mechanically shorts the cavity and receiver input circuit when the radar is shut down, thus protecting the receiver mixer crystal against RF voltages entering the antenna from nearby radiation.

The shutter consists of a length of stiff wire which shorts the center of the cavity. The wire is withdrawn externally by the armature-type relay K501 when the equipment is energized. When K501 is energized, a pair of K501 contacts open and connect in a high-resistance K501 armature coil for holding. Contacts of K501 are protected against arcing by filter C523 and R526.

(4) HARMONIC ATTENUATOR Z509. *(See figure 2–13.)*

At the output of the second TR cavity (V504A), the transmitter voltage at the fundamental frequency is attenuated sufficiently to protect the mixer crystal. However, the total level of the magnetron harmonic voltage of the transmitted signal at this point is sufficient to reduce mixer crystal life materially. Therefore, the output of the second TR cavity is fed through harmonic attenuator Z509 to reduce the harmonic voltage.

This filter consists of an 8-in. length of 1-1/2-x-3 in. S-band waveguide, and is the equivalent of two attenuators connected in series (see figure 2–12). The size of the disks on the center conductor determines the impedance match into and out of the waveguide. At the fundamental frequency, the impedance match is nearly perfect, with a standing-wave ratio not greater than 1.05 for the range of 1220 to 1350 Mc. Also, since the fundamental frequency is below the waveguide cutoff frequency, the waveguide is not excited and, therefore, the filter passes the received signals with negligible loss. (Waveguides only transmit frequencies above a definite frequency as determined by the dimensions of the waveguide.)

However, as the harmonic frequencies are above the waveguide cutoff frequency, the harmonic energy is transmitted down the waveguide in both directions by the disks and absorbed by the resistance cards at the ends of the waveguide. This results in a 20-db attenuation of the second harmonic signal, an attenuation of 20 db of the third harmonic, and over a 20-db attenuation of the fourth harmonic. Thus, harmonic signals of the transmitted signal are sufficiently reduced to prevent damage to the mixer crystal, which is connected directly at the output of the attenuator.

(5) LOCAL OSCILLATOR INJECTOR RF503A AND SIGNAL MIXER CR503.

Connection between cavities assembly RF503 and harmonic attenuator Z509 is made through local oscillator injector assembly RF503A. The details of RF503A are shown in figure 2–14. The 50-ohm resistor disk provides termination and load for the local oscillator,

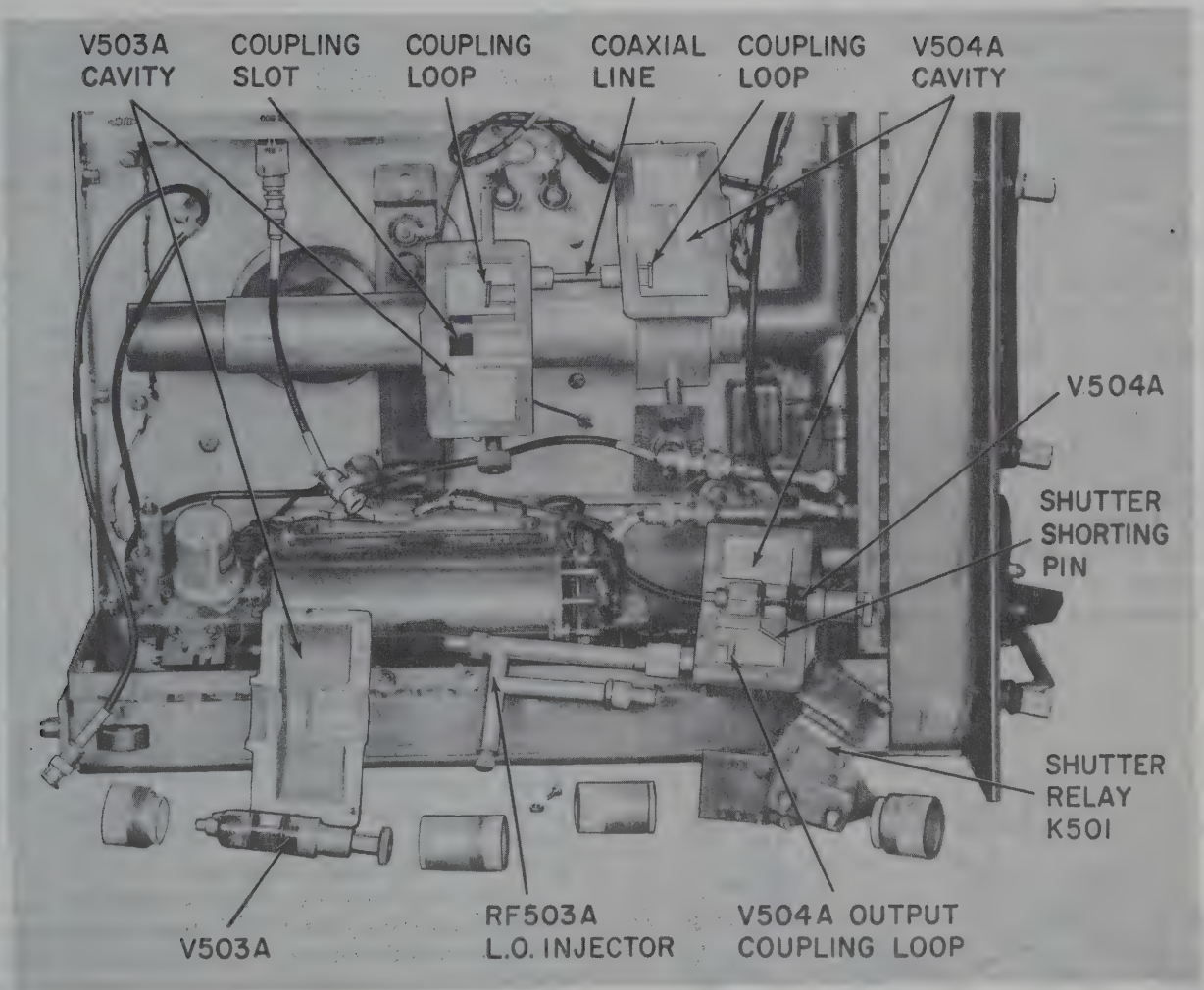

Figure 2–11. Cavities Assembly Details

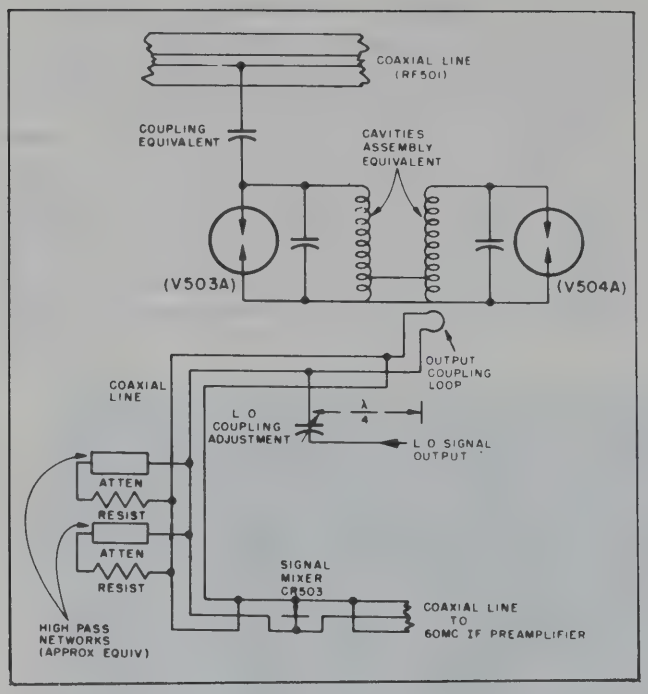

Figure 2—12. Receiver Input Circuit Equivalent

which operates at a frequency 60 Mc above the echo signal frequency. The injector probe capacity-couples the local oscillator signal to the coaxial line section of RF503A. This line section carries echo signals from TR cavity V504A to crystal mixer CR503. The injector spacing to the center conductor is adjustable to permit adjustment of the local oscillator injection voltage.

Transmit-receive cavity V504A, like all parallel resonant circuits, presents a low impedance (practically a short circuit) to signals off resonance. The local oscillator is coupled into the coaxial line of RF503A one-quarter wave length away from the V504A TR cavity coupling loop, the coupling loop being reflected as an open circuit at this point. (If the injection point were a half wavelength away from the TR cavity coupling loop, it would effectively be at a short-circuit point and little or no power would be transferred to the coaxial line.)

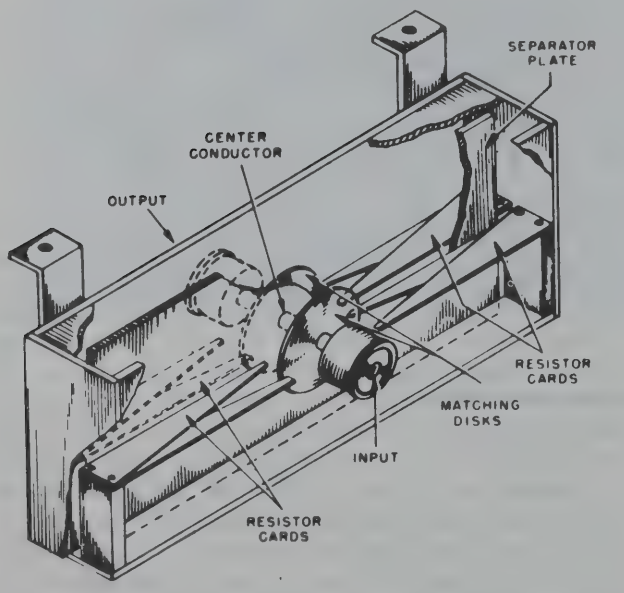

Figure 2—13. Harmonic Attenuator Details

Signal mixer crystal CR503 is mounted in a section of rigid coaxial line at the output of harmonic attenuator Z509. Echo signals from the output of the second TR cavity of V504A then pass together with the local oscillator signal through RF503A and Z509 to mixer crystal C503. These two signals beat to provide a 60-Mc echo signal. The 60-Mc signal and the d-c crystal current resulting from rectification of the local oscillator voltage then are passed on to the 60-Mc IF preamplifier Z221.

A consideration for an optimum noise figure is the electrical length of the coaxial line system between TR cavity V504A and the mixer.

From the beating of the echo and local oscillator signals, the mixer develops not only the desired 60-Mc difference signal but also various other signals which are combinations of frequencies arising from mixing. The image frequency signal is the signal developed which requires major consideration. The frequency of this signal is 120 Mc above the echo signal frequency and is the result of additive frequency mixing of the 60-Mc and the local oscillator signals which are present in the mixer. In producing the image signal, a loss in 60-Mc signal results because 60-Mc signal power is consumed in producing the image signal.

The image signal travels to the TR cavity coupling loop and is reflected back to the mixer. If proper termination is not provided, this signal, when beat with the local oscillator signal, produces a 60-Mc signal which reduces the original 60-Mc signal. When the circuit is properly terminated for the image signal, the converted image signal reinforces the original 60-Mc signal. The process is actually that of recovering a loss in 60-Mc output which would occur if no consideration were given to signal image termination.

Proper termination is actually obtained by choosing the proper length of the W503 coaxial cable, the electrical length of RF503A and Z509 being predetermined by their own requirements. In a sense, choosing the proper length of W503 sets the transit time of the image signal to and from the TR cavity so that the phase of the converted image signal is correct for addition to the difference signal.

If W503 were adjustable in length, a point could be found where the image signal would subtract from the difference signal, resulting in a 3-db poorer noise figure as compared to the noise figure for the optimum length. A point to be remembered, should repair of W503 cable be attempted, is that a variation of one-quarter inch in the normal length (8-3/8 in.) of W503 adds 0.5 db or more to the over-all noise figure.

e. LOCAL OSCILLATOR AND CONTROL CIRCUIT ASSEMBLY U501.

(1) GENERAL.

This assembly contains local oscillator Z511 and its associated circuits.

(2) LOCAL OSCILLATOR Z511. *(See figure 2–15.)*

Physically, Z511 consists of a metal cylinder which contains the local oscillator tuned circuits and the type-2C40 lighthouse triode oscillator tube V505. The oscillator circuit is of the grounded-grid type, with tuned cathode and tuned plate circuits. Both tuned circuits are basically coaxial lines. A quarter-wavelength line is used in the cathode circuit and a three-quarter-wavelength line is used in the plate circuit. Feedback is obtained by coupling loops in each circuit, the coupling loops being interconnected by a short length of coaxial line. The coupling loops, being inductive-coupling media, are located at magnetic field points between the inner and outer conductors of the coaxial lines.

The cathode tuned circuit is foreshortened by the V505 cathode-to-grid interelectrode capacity to a point where it assumes somewhat the form of a resonant cavity. The plate circuit is also foreshortened by the plate-to-grid capacity of V505 but, being a three-quarter-wavelength line, it retains its coaxial line form.

The cathode circuit mainly provides the negative resistance (feedback) necessary for oscillation. It has a broad-band characteristic and therefore presents little phase shift to the feedback voltage, and hence has only minor effect on the operating frequency. In operation, the cathode circuit is tuned to the local oscillator mid-band frequency.

The plate tuned circuit is high-Q and is the main frequency-controlling element. The only V505 interelectrode capacitance across this circuit is the grid-to-plate capacitance; consequently, frequency variations due to changes in tube interelectrode capacitances are minimized. The over-all design of the oscillator as described results in extremely stable operation. Two separate coupling loops at the ground end of the plate line provide output voltage.

(3) LOCAL OSCILLATOR TUNING. *(See figures 2–15 and 2–16.)*

The cathode is tuned by five adjustable paddles which are located between the inner and outer conductors of the cathode line. These paddles are located in the region of the maximum magnetic field and therefore effect a tuning adjustment mainly by adjusting the inductive reactance of the cathode-tuned circuit.

The plate circuit has one tuning adjustment. It is controlled through reduction gearing by tuning motor B502, which adjusts the tuning of the local oscillator by L.O. MOTOR switch S613A/B at the indicator unit. A cam mechanism associated with the reduction gearing of B502 adjusts the position of a sliding ring mounted between the inner and outer conductors of the plate circuit line.

The ring is composed of both metal and dielectric material, no electrical contact being made to the metal portion of the ring. When the ring is moved along the plate line, the magnetic field, the static field, or a combination of both fields is affected, thus accomplishing tuning of the plate circuit and oscillator frequency.

The metal portion of the ring is the equivalent of a shorted turn and therefore reduces the effective inductive reactance of the plate circuit as the ring is moved towards the point of maximum magnetic field (ground end of line). The dielectric portion of the ring affects the dielectric constant between the inner and outer conductors of the plate line. As the ring approaches the maximum static field of the line, the effective capacitive reactance of the plate circuit is increased and the oscillator frequency is increased. This method of adjusting oscillator frequency provides the latitude of adjustment required without the use of sliding electrical contacts.

The microswitches S502 and S503 are operated by the tuning mechanism of B502, and they limit the movement of the sliding ring at its two extreme positions. The operation of B502 and its limit switches is as follows:

Tuning motor B502 has a permanent magnetic field and is reversed by reversing the polarity of the voltage applied to the armature. The L.O. MOTOR switch S613A/B at the indicator connects either ground (DEC position) or +27.5 volts (INC position) to the C520 side of the B502 armature. The C519 side of the B502 armature goes to the midpoint of the series circuit which includes R518 and R519 as well as the two limit switches S502 and S503. This series circuit is connected between the +27.5-volt supply and ground. Therefore, when B502 is not rotating, the C519 side of the B502 armature is approximately 14 volts positive with respect to ground

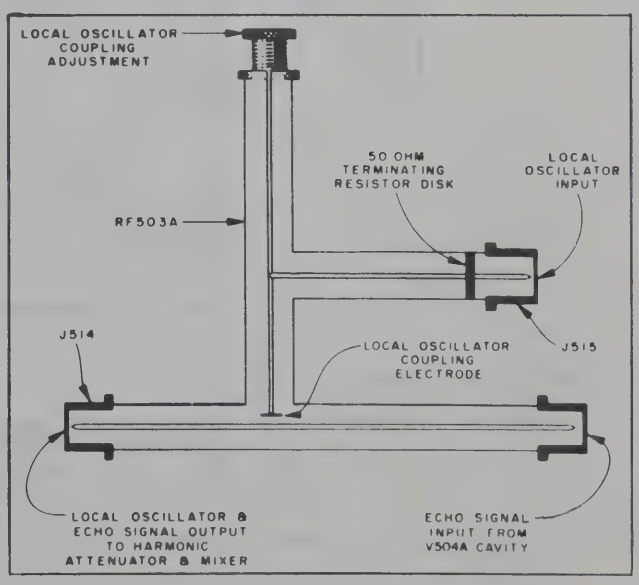
LOCAL OSCILLATOR COUPLING ADJUSTMENT
50 OHM TERMINATING RESISTOR DISK
LOCAL OSCILLATOR INPUT
RF503A
J514
J515
LOCAL OSCILLATOR COUPLING ELECTRODE
LOCAL OSCILLATOR & ECHO SIGNAL OUTPUT TO HARMONIC ATTENUATOR & MIXER
ECHO SIGNAL INPUT FROM V504A CAVITY

Figure 2–14. Local Oscillator Injector

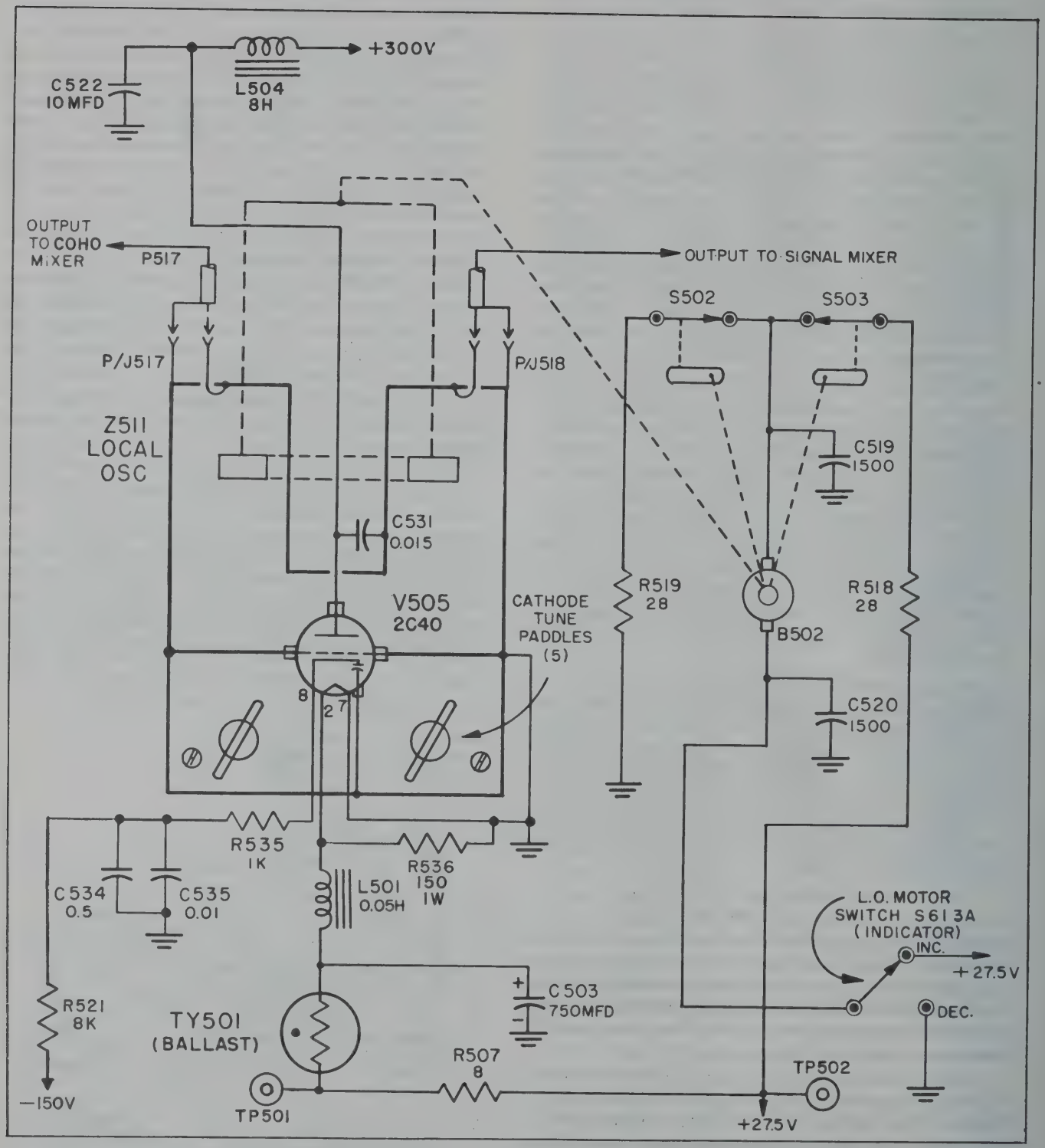

Figure 2–15. Local Oscillator

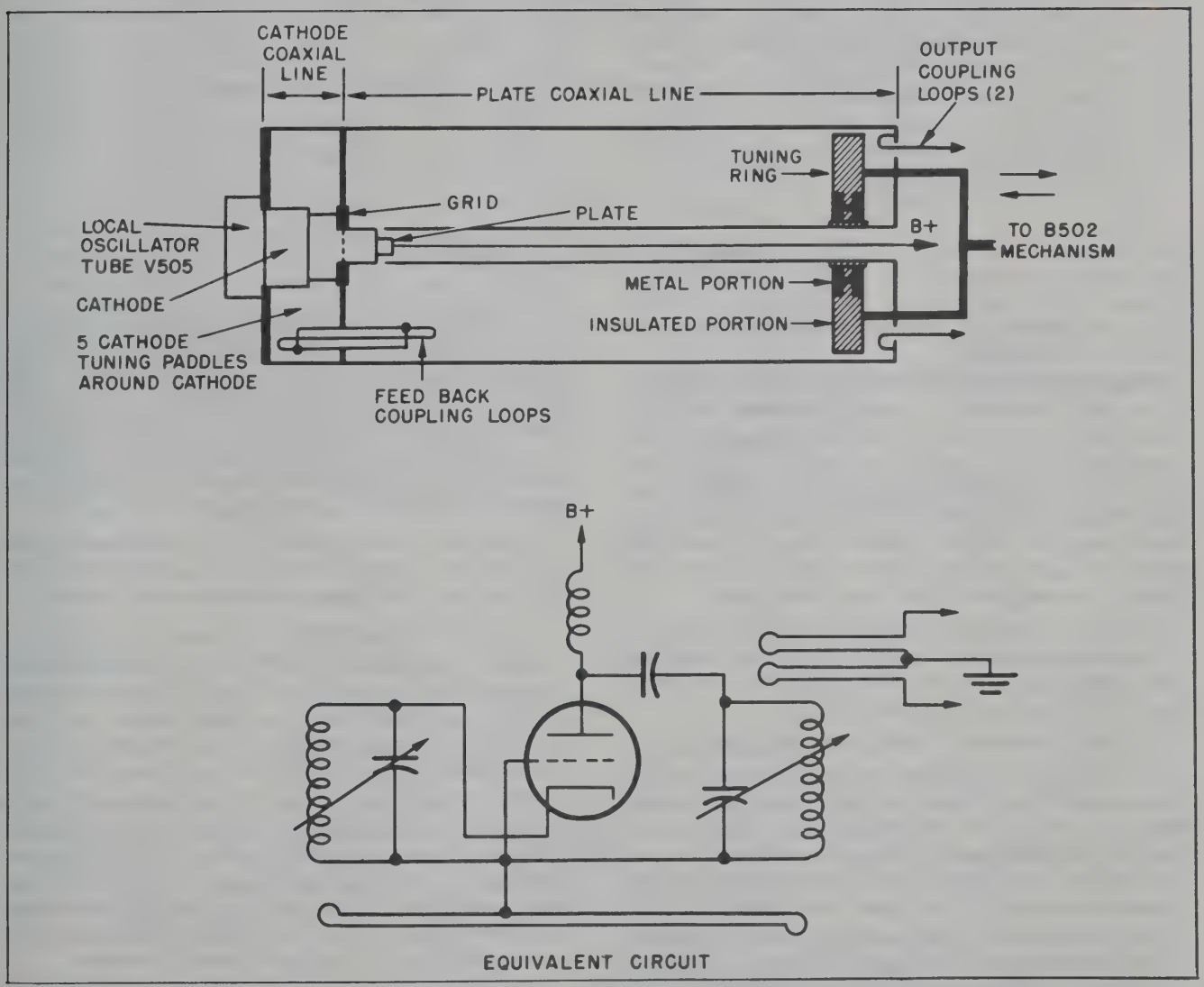

Figure 2—16. Local Oscillator Details

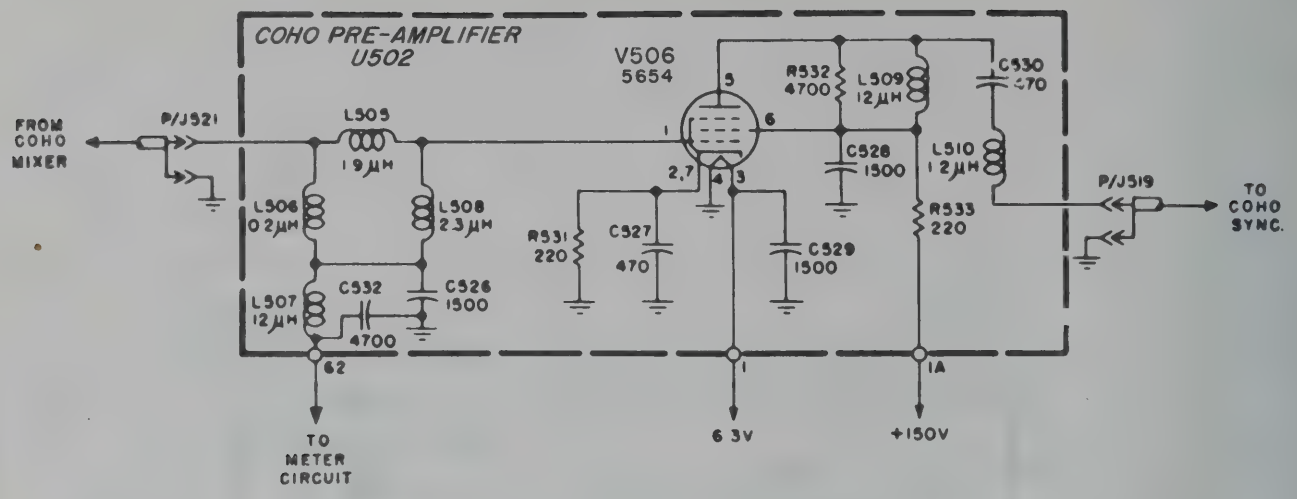

Figure 2–17. Coho Preamplifier

and approximately 14 volts negative with respect to the +27.5-volt supply.

When the L.O. MOTOR switch is turned to DEC, the C520 side of the B502 armature is grounded, armature current flows through R518, and S503 opens the circuit when the limit is reached. When the L.O. MOTOR switch is turned to INC, the C528 side of the B502 armature is connected to the +27.5-volt supply and current flows through the armature in the reverse direction, with R519 now carrying the armature current. When the limit is reached, S502 opens and B502 stops.

The actual operating voltage of B502 is 6 volts, the voltage drop across the resistor carrying the motor current then being 21.5 volts. Electrical noise of the B502 motor is filtered by C519 and C520.

f. COHO PREAMPLIFIER U502. *(See figure 2–17.)*

This component amplifies the 60-Mc pulses from the coho mixer. These pulses are the converted 2-microsecond pulses of the transmitter. The amplifier also provides isolation between the coho mixer and the output circuit. The output circuit supplies signals to the coherent oscillator in the signal comparator.

The amplifier is a single-stage amplifier consisting of V506 with fixed-tuned input and output circuits. The input circuit consists mainly of L505, L506, and L508. The circuit arrangement is the π equivalent of a double-tuned overcoupled circuit. This circuit provides the broadband (approximately 5 Mc) characteristic required; and C526, C532, and L507 isolate the coho mixer crystal current (dc) circuit from the tuned circuit. Crystal current is passed from the C532 end of L507 to the metering circuit of M501.

The V506 plate and output circuit consists mainly of R532, L509, C530, L510, and the output circuit of J519. R532 is a damping resistor to provide a broadband output circuit. L509 is used for shunt feed of the d-c plate voltage. C530 is a d-c blocking capacitor and isolates the plate voltage from the output circuit. The plate circuit is tuned by the V506 output and circuit capacitances and by the inductance of L510 in series with the reactance of the output circuits. This circuit, often used as an input circuit, provides the necessary impedance transformation to couple the relatively high-impedance plate circuit to the low-impedance output circuit.

Capacitor C528 acts both as the V506 screen bypass and as an RF grounding capacitor for R532 and L509. R533 is the V506 plate supply decoupling resistor.

g. IF PREAMPLIFIER. *(See figure 2–18.)*

The IF preamplifier (Z221) is a four-tube chassis mounted near the TR box. This amplifier raises the 60-Mc signal level from the signal mixer to a convenient level for transmission over a coaxial line to the main 60-Mc IF amplifier in the signal comparator unit.

The receiver mixer output is fed by cable W502 to terminal 1 of the input transformer (T223) primary. The other primary terminal (terminal 2) is connected, through an RF filter consisting of L224, L225, and associated capacitors, to jack J225. The d-c crystal output of J225 is fed to the TEST SELECTOR switch and associated meter for crystal current indication.

The input stage of the preamplifier is a neutralized, grounded-cathode triode feeding a grounded-grid triode stage (Wallman circuit). A low noise figure is obtained, partly through the use of triodes (triodes having less noise than pentodes and tetrodes) and partly through the circuit arrangement.

Transformer T223 is an impedance-matching input-coupling transformer which raises the impedance of mixer crystal CR503 to the value required by V222 for optimum noise figure. Trimmer capacitor C240 is for the purpose of adjusting for best signal to noise ratio. Inductor L222 is a neutralizing coil, while L227 is the

d-c return for V223. The third and fourth IF amplifiers (V224, V225) employ conventional circuits. The output of the last amplifier, V225, is coupled by matching transformer T222 through jack J227 and a coaxial cable to the unit output connector, J507.

b. MISCELLANEOUS CIRCUITS.
(See figure 7–117.)

Trigger voltage for indicator timing circuits is taken from pulse transformer T502. The triggers are routed to the indicator via the inter-unit connecting circuits of the power supply unit. IFF trigger signals are taken from this circuit at J418 (see figure 7–115 and paragraph 7.*d.*, this section). When IFF pre-trigger is desired, receptacle J157 on the modulator unit is used instead of J418 for the IFF sync cable (see figure 2–5 and paragraph 2.*b.*, this section).

Direct current is used on the magnetron V502 filament to remove the possibility of AM or FM modulation being introduced into the cathode circuit. The d-c filament power for V502 is obtained from step-down transformer T504, disk rectifier CR501, and single-section filter L502 and C508. Direct current is also used for heating the filament of the local oscillator, V505, the consideration being the same as that of V502. However, this d-c voltage is obtained from the +27-volt d-c supply. To stabilize the output of V505, the filament voltage is regulated by the ballast tube, TY501. The supply is further filtered by L501 and C503.

Keep-alive voltage (approximately 1000) for TR tube V504A is obtained from the V501 half-wave rectifier circuit which includes transformer T501; RC filter C501, C502, and R505; and bleeder R501-R504 (see figure 2–7). The metering circuit of M501 and S506 provides a means for measuring V502 filament current and the coho and signal mixer currents.

The blower, B501, provides air circulation for the magnetron. If the unit temperature falls below 0°C (32°F), thermostat S505 energizes heaters HR501 and HR502. The heaters are de-energized at 15°C (59°F). Thermostat S501 is used in conjunction with magnetron V502. It provides overtemperature protection by opening the high-voltage power supply control circuit at 95°C (203°F). Noise filters are used on both a-c and d-c circuits carrying power to the units. The filters reduce noise which might be radiated from external wiring or carried directly into associated circuits. The filter R521, R535, C534, and C535 decouples the cathode of the local oscillator from the −150 volt supply circuit.

i. FUSES.

Filament transformers T503 and T504, keep-alive transformer T501 and the magnetron cooling blower B501 are protected by a 4-amp fuse, F403, located on the front panel of the power supply unit.

4. SIGNAL COMPARATOR CM-36A/TPS-1D.
(See figure 2–19.)

a. GENERAL.

The signal comparator receives 60-Mc echo signals from the 60-Mc preamplifier in the receiver-transmitter.

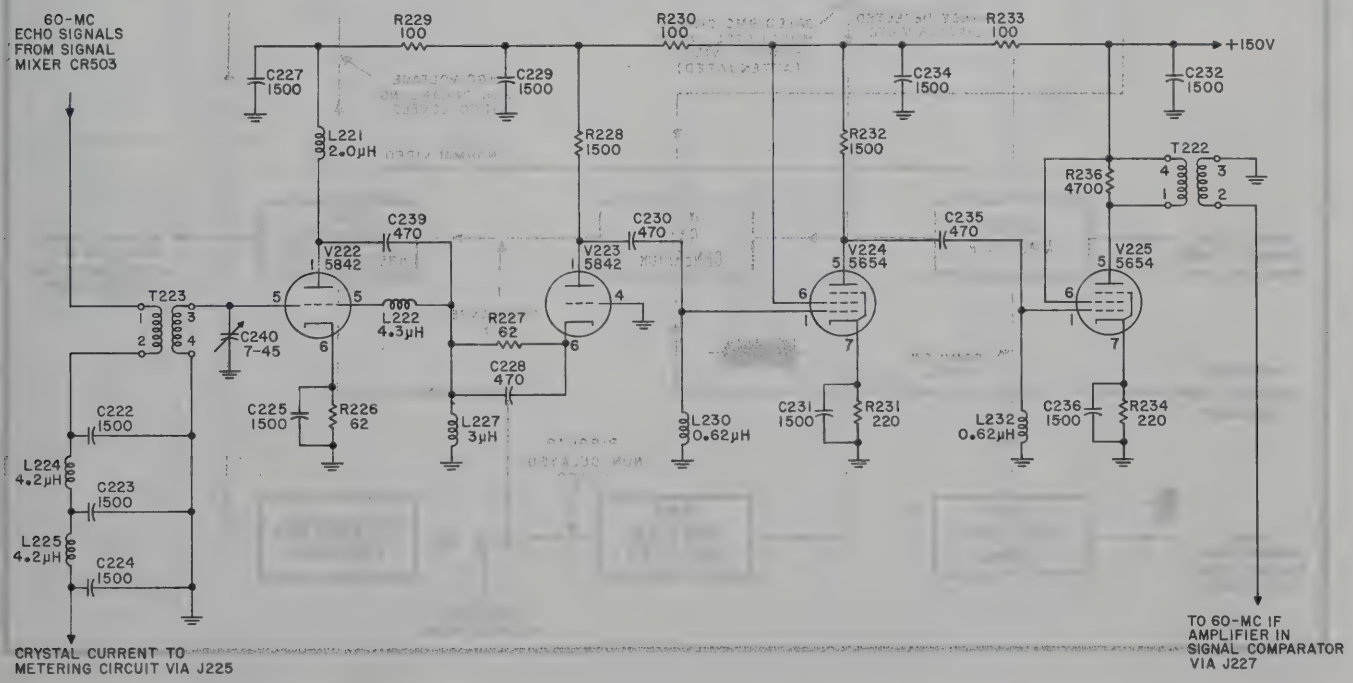

Figure 2–18. IF Preamplifier

It also receives 60-Mc transmitter signals from the coho mixer for MTI synchronization.

The unit generates MTI triggers which are delivered to the modulator; it also delivers either normal or MTI video signals to the indicator and to an output jack for RPPI use.

The unit contains the following circuits:

60-Mc amplifier (subassembly)
Coherent oscillator (subassembly)
MTI repetition rate trigger amplifier
2500-microsecond delay line (subassembly)
Delay amplifier (subassembly)
Non-delay amplifier (subassembly)
Video balancer and amplifier
MTI gate generator

b. 60-MC IF AMPLIFIER. *(See figure 2–20.)*

This subassembly amplifies, limits, and detects signals received from the 60-Mc preamplifier in the receiver-transmitter.

The amplifier portion of the subassembly consists of seven cascaded stages (V301-V306 and V308), four crystal detectors (CR301, CR302, CR303 and CR304), and a meter amplifier (V307) for checking the output noise level. The first stage has an input frequency acceptance well beyond 60 Mc. The output circuit of the first stage has a bandwidth of approximately 1 Mc and is tunable to permit adjusting the amplifier to the IF frequency of the incoming signal.

Following the tunable stage are two staggered amplifier pairs, V302-V303 and V304-V305. Both staggered pairs are fixed-tuned to a center frequency of 60 Mc. The output stage, V306, is a broad-band fixed-tuned stage using an overcoupled output transformer, T302. The bandwidth of the amplifier from the plate of the second stage to the detector is approximately 5 Mc. This bandwidth permits tuning the output of the first amplifier stage over a range of about 4 Mc without changing the overall gain and bandwidth characteristic.

The circuits of V304, V305, and V306 are arranged to provide limiting, which is a requisite for proper phase detection when MTI is in use. The grids of these tubes are operated at approximately 50 volts above

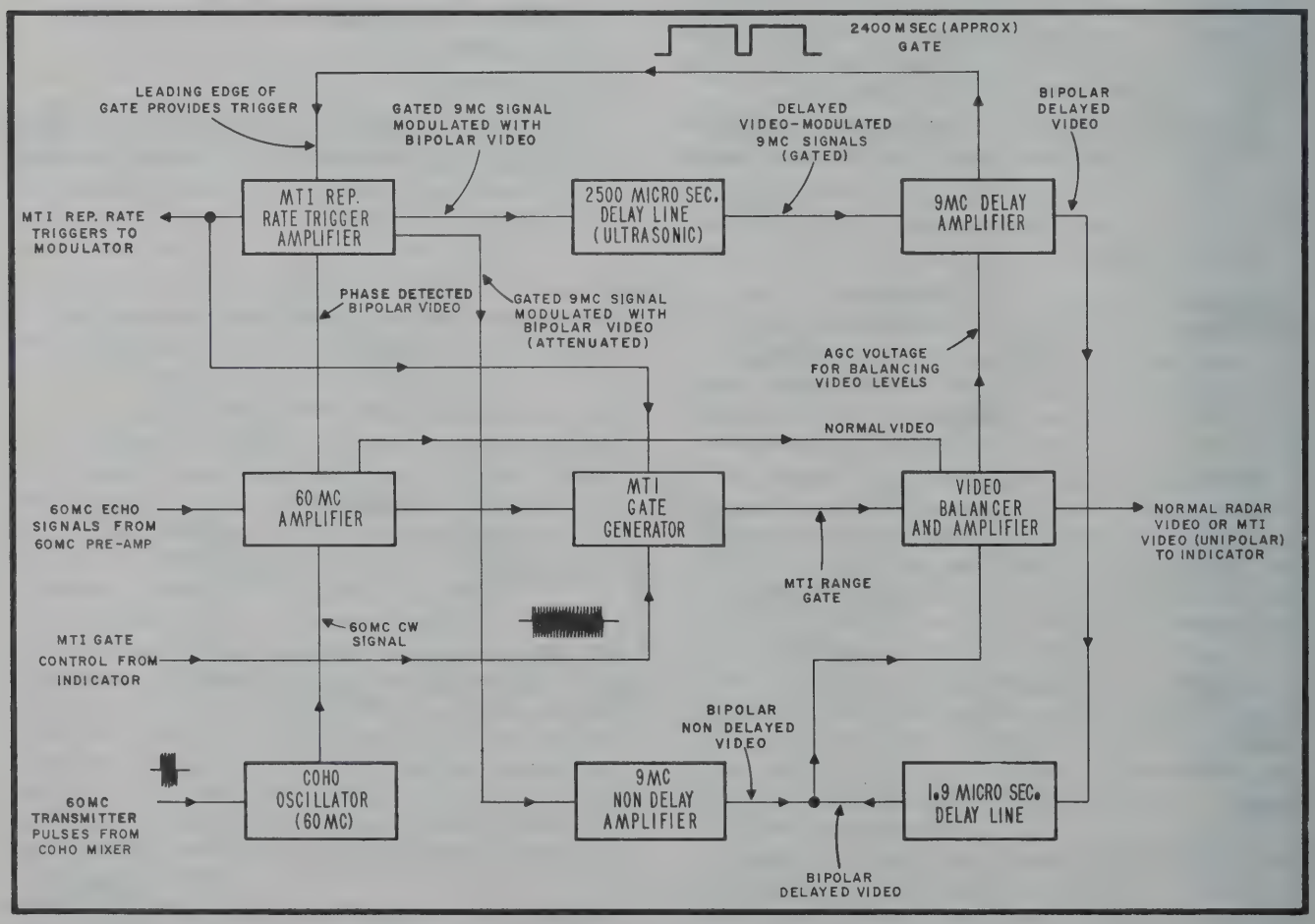

Figure 2–19. Signal Comparator Block Diagram

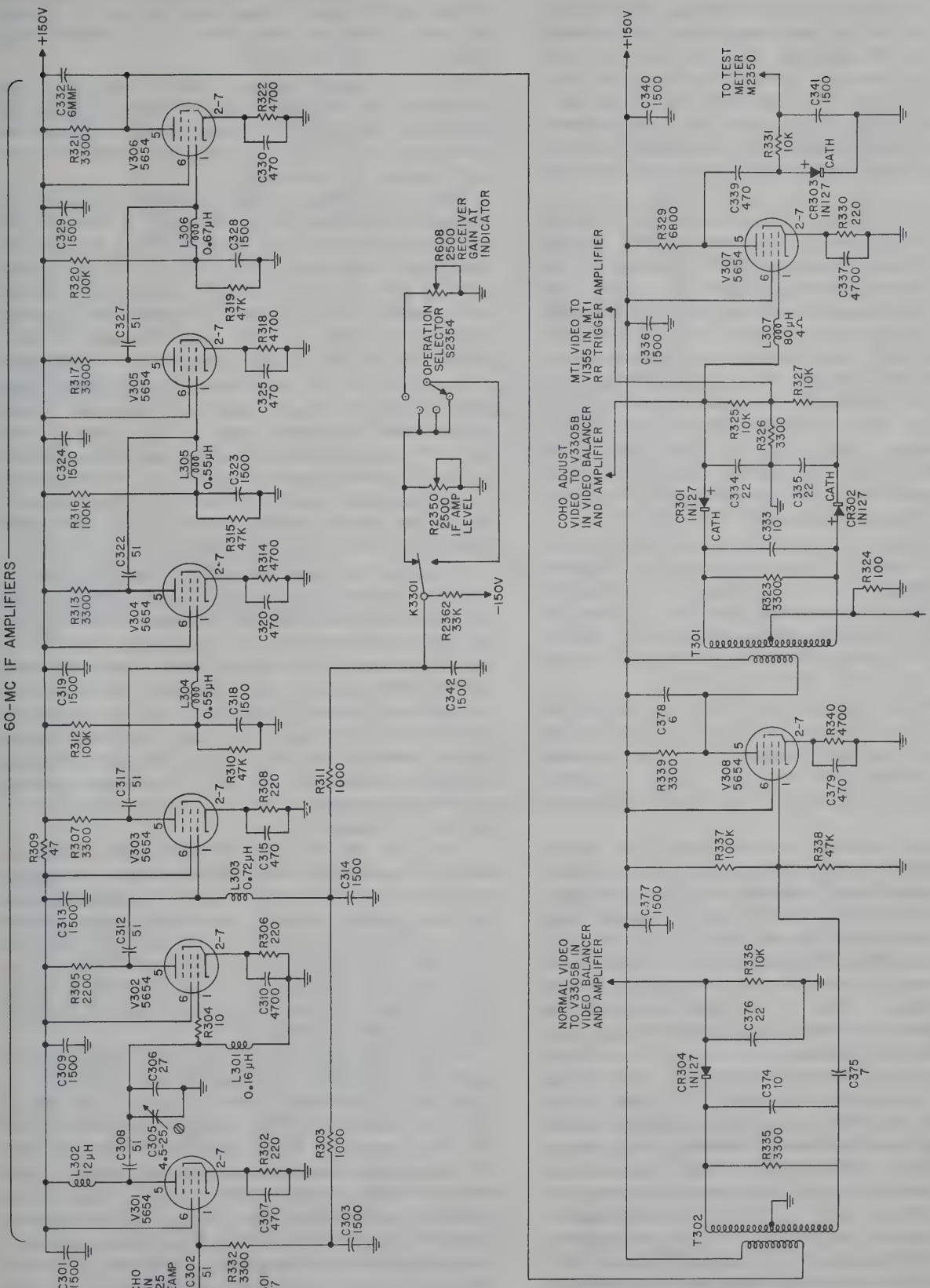

Figure 2–20. 60-Mc IF Amplifier in Signal Comparator

ground by the use of voltage dividers. The cathode resistors are sufficiently large to develop slightly over 50 volts of bias, which places the grids slightly negative in relation to the cathodes. Also, the effective plate voltage is approximately 75 volts, which is at the plate current roll-off point of these tubes. Therefore, for a signal voltage swing of less than 1 volt, the resultant negative portion of the signal will be limited by cutoff, while the positive portion will be limited by plate saturation.

The last IF amplifier, V306, is followed by two distinct types of detector circuits: one provides conventional amplitude-modulation (AM) detection of the echo signal for normal-radar display; the second provides phase detection of the echo signal for MTI display. The phase detector also provides, as by-products, two d-c voltages for adjustment-checking in conjunction with internal test meter, M2350. One voltage indicates coho level, the other indicates IF amplifier signal level. The low value of C375, between T302 and the grid of V308, is chosen so as to limit the signal level at the grid of V308 to that of the signal at V306. This assures the same signal level at the phase detectors, CR301 and CR302, as at the normal video detector, CR304.

In understanding the operation of the phase detector it should be noted in figure 2—21 that the coherent oscillator voltage is fed into the center of the secondary of T301 which carries received signal voltage. Thus, the coho voltage is fed to the two crystal rectifiers, CR301 and CR302, in series with the signal voltage induced into each half of the secondary of T301.

It should also be noted that CR301 and CR302 are poled in opposite directions, and also that R326, which forms part of the load resistance, is common to both sides of the output circuits of each rectifier. It is across this resistor (R326) that MTI video signal voltages are developed.

First consider a normal condition where coho voltage is present without the presence of received signal voltage. The voltages developed across the RF filter capacitors, C334 and C335, are equal and of opposite sign in relation to ground. Therefore, no signal voltage is developed across R326. This is also true for an abnormal MTI condition, where received signal voltage is present and coho voltage is absent. It can therefore be seen that no video signal is developed across R326 unless both signal voltages are present.

Now consider the situation where, with coho voltage present, a received signal voltage is induced in the secondary of T301, this voltage being in phase with the coho voltage. One half of the induced voltage across the secondary of T301 is added to the charge on one filter capacitor (C334 or C335), and a like voltage is subtracted from the other capacitor. The difference of these two voltages impressed on the capacitors then develops a voltage across R326 through R325 and R327. Initially the difference voltage is equal to the signal voltage but is reduced because of the voltage division of R325 and R326, and R327 and R326. The polarity of the voltage developed across R326 is of the same sign as that of the larger voltage with respect to ground. If the received signal voltage is shifted 180° in phase, the voltage developed across R326 is of the same amplitude but of opposite sign.

For other received signal-to-coho-voltage phase displacements, the voltages developed across each half of the circuit are simply the peak voltages derived between the signal and coho voltages during the time each rectifier is conducting.

The coho oscillator voltage is adjusted by use of the test meter, described below, so that it is equal to the signal voltage across one half of the T301 secondary at limit level (approximately 4 volts). If the signal input phase is plotted against the coho phase, the phase detector characteristic of figure 2—21 is derived. The characteristic is plotted for equal signal voltages but holds reasonably true for all signal voltages up to limit level.

From this plot it can be seen that maximum phase detector output voltages appear at 0° and 180° phase displacement. Also, zero output voltage results at 90° and 270° phase displacement. Thus, the phase detector converts the 60-Mc received signals to video signals of an amplitude and polarity dictated by the phase relationship of the received signals to the coho oscillator, two blind spots existing at 90° and 270°.

In studying the phase detector operation, the need for limiting received signals becomes more apparent. The output of the phase detector is dependent not only on the phase relationship of the two signals, but also on the voltage level of the received signal. Therefore, clutter signals, which normally have no phase difference from one receiving period to the next, can have period-to-period amplitude changes. And since amplitude changes can be passed on to the output of the phase detector, resulting in indications not only of moving target signals but also to some degree of clutter signals, limiting becomes a necessity.

The output of the phase detector is fed directly to the 9-Mc oscillator in the MTI repetition rate trigger amplifier. When the radar is used as a normal system, the coho oscillator signal is removed and normal radar video signals are obtained from CR304 which demodulates the 60-Mc signals into load resistor R336. The video signal (negative) is then fed to V3005B, in the video balancer and amplifier circuit, through the contacts of K3300 and K3301.

To adjust either the coho oscillator or the received signal voltage, the voltage developed across C334 is sampled. As the coho oscillator voltage is CW, it develops d-c across C334. This voltage is supplied to TEST METER M2350 via TEST SELECTOR switch S2353. The metering circuit is isolated from the detector signal circuit by filter R2358, R2363. Received signal video voltage is amplified by V307, rectified and filtered by CR303-R331-C341, and then fed to the metering circuit. This voltage is the IF amplifier signal level mentioned earlier. The signal level is adjusted by means of potentiometer R2350. This control permits adjustment of the bias on the first and third IF stages and, consequently, adjusts the gain of these stages. Inductance L307, in

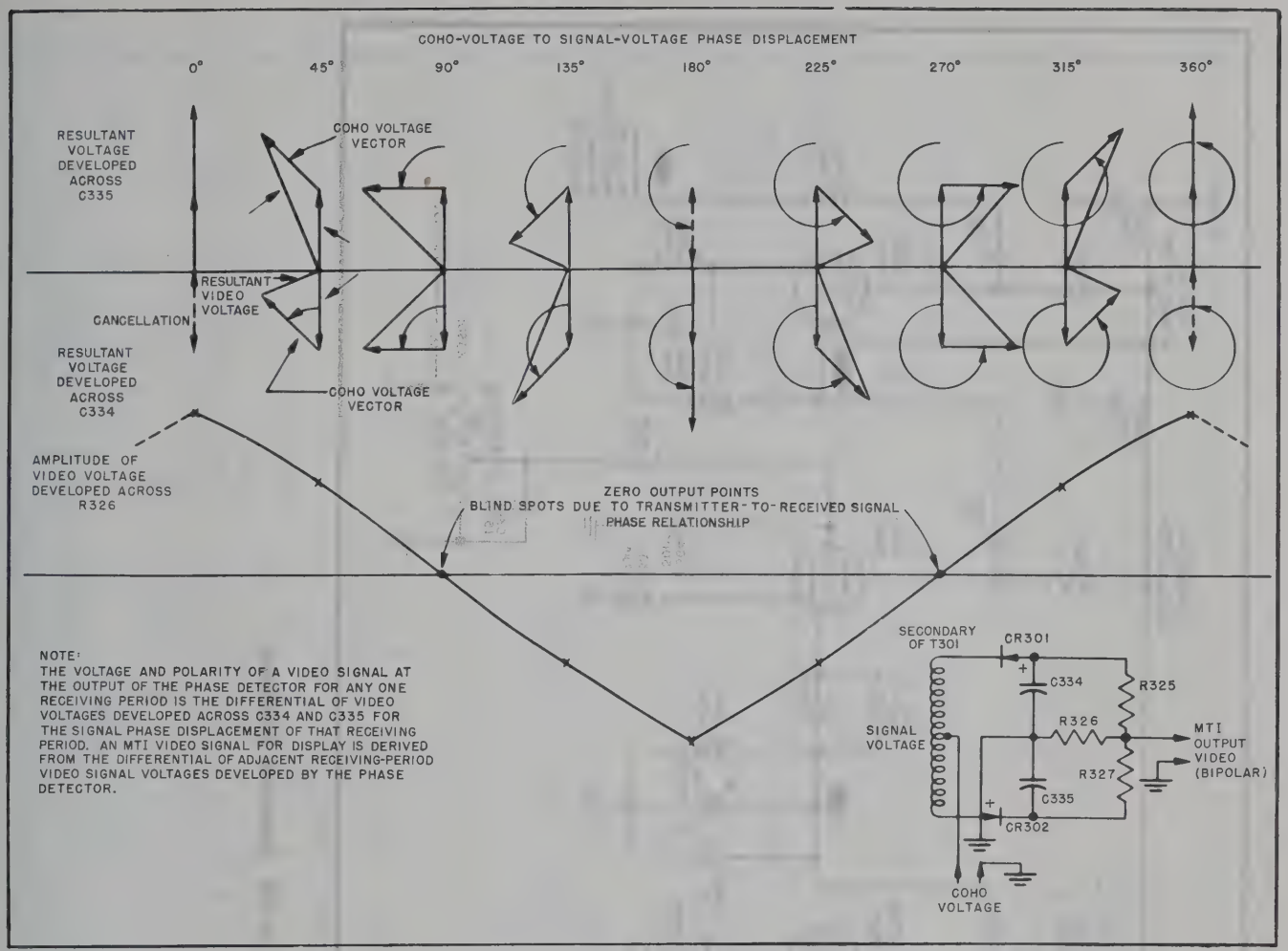
COHO-VOLTAGE TO SIGNAL-VOLTAGE PHASE DISPLACEMENT
0°
45°
90°
135°
180°
225°
270°
315°
360°
RESULTANT VOLTAGE DEVELOPED ACROSS C335
COHO VOLTAGE VECTOR
RESULTANT VIDEO VOLTAGE
CANCELLATION
RESULTANT VOLTAGE DEVELOPED ACROSS C334
COHO VOLTAGE VECTOR
AMPLITUDE OF VIDEO VOLTAGE DEVELOPED ACROSS R326
ZERO OUTPUT POINTS
BLIND SPOTS DUE TO TRANSMITTER-TO-RECEIVED SIGNAL PHASE RELATIONSHIP
NOTE:
THE VOLTAGE AND POLARITY OF A VIDEO SIGNAL AT THE OUTPUT OF THE PHASE DETECTOR FOR ANY ONE RECEIVING PERIOD IS THE DIFFERENTIAL OF VIDEO VOLTAGES DEVELOPED ACROSS C334 AND C335 FOR THE SIGNAL PHASE DISPLACEMENT OF THAT RECEIVING PERIOD. AN MTI VIDEO SIGNAL FOR DISPLAY IS DERIVED FROM THE DIFFERENTIAL OF ADJACENT RECEIVING-PERIOD VIDEO SIGNAL VOLTAGES DEVELOPED BY THE PHASE DETECTOR.
SECONDARY OF T301
CR301
C334
R325
R326
SIGNAL VOLTAGE
MTI OUTPUT VIDEO (BIPOLAR)
R327
C335
CR302
COHO VOLTAGE

Figure 2–21. Phase Detector Characteristic

the grid circuit of V307, isolates V307 from the detector output circuit.

c. COHERENT OSCILLATOR. *(See figure 2–22.)*

The coherent oscillator is a stable 60-Mc oscillator whose phase is locked to the phase of each transmitted pulse. The coherent oscillator phase is therefore representative of the transmitter signal phase. The output of the oscillator is fed to the phase detector of the 60-Mc IF amplifier to provide a phase reference signal.

The oscillator consists of a 3-stage 60-Mc amplifier (V350, V351, and V352), a 60-Mc oscillator (V353), and an output amplifier (V354).

A small portion of the transmitter pulse signal, converted to 60 Mc in the coho mixer, is amplified by the coho preamplifier, U502 (receiver-transmitter), and then further amplified by V350, V351, and V352. The amplified pulse signal is fed to the grid of V353, the equivalent of a grounded-plate oscillator having a high-C grid tank circuit- L354, C360, and C361.

The level of the 60-Mc pulse signal is sufficient to phase-lock the 60-Mc oscillator during the transmitter radiating period (2.0 microseconds). The oscillator has sufficient stability to maintain this phase during the receiving period (approximately 2500 microseconds). The COHO SYNC control R2355, permits setting the level of the 60-Mc pulse signal from the coho preamplifier (receiver-transmitter) by adjusting the cathode bias of V350.

Condenser C361 is adjustable to permit setting the oscillator frequency to 60 Mc. Negative resistance is obtained by the use of the cathode inductance, L355. The COHO LEVEL potentiometer, R2351, adjusts the voltage to the V353 screen (acting as the grounded plate of the oscillator), and hence sets the output level of the oscillator. One set of K3301 contacts opens the V353 screen supply to disable the oscillator for normal radar operation.

Oscillator output voltage is taken from the V353 plate circuit, which is electron-coupled to the oscillator circuit. The 60-Mc phase-locked signal is then amplified by V354, which supplies 60-Mc reference voltage to the phase detector circuit of the 60-Mc IF amplifier. Inductance L358, connected in the output circuit of

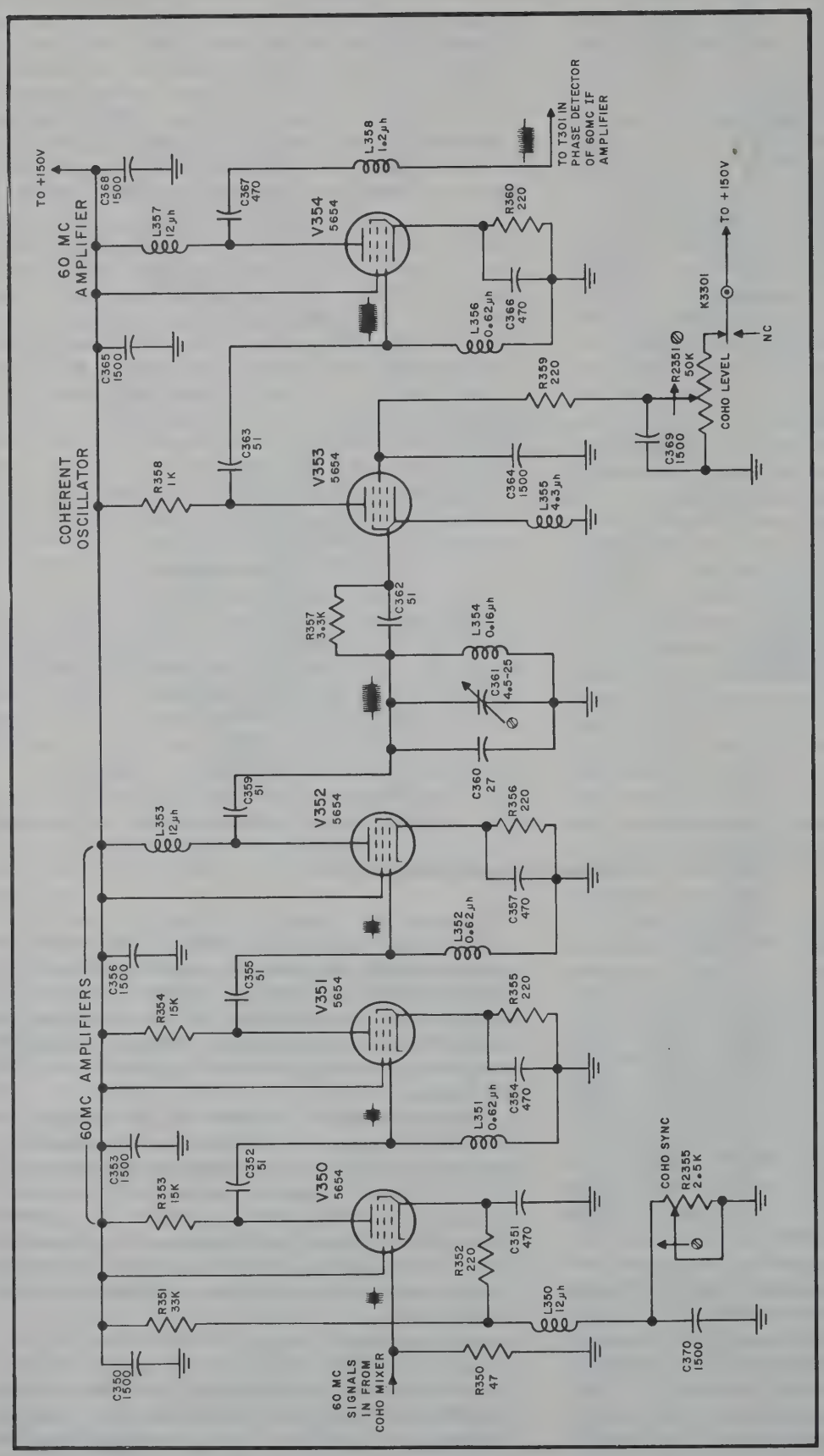

Figure 2–22. Coherent Oscillator

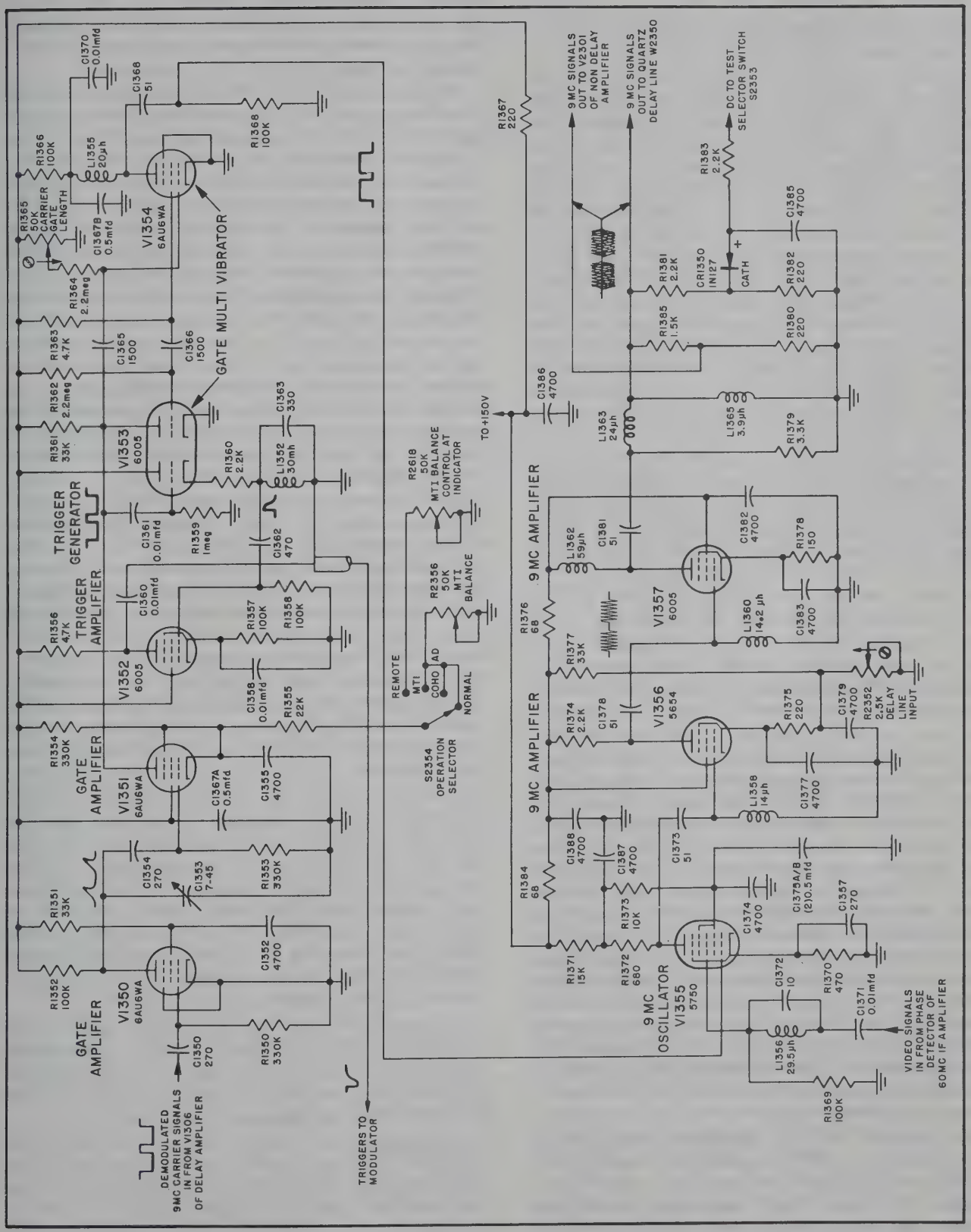

Figure 2–23. MTI Repetition Rate Trigger Amplifier

V354, is used to tune out the capacitive reactance of the RG-62/U cable which carries the reference voltage to the 60-Mc IF amplifier phase detector.

d. MTI REPETITION RATE TRIGGER AMPLIFIER. *(See figure 2–23.)*

This assembly of the signal comparator unit develops the repetition rate triggers for MTI or normal radar operation. Also, bipolar delayed and non-delayed video signals are developed from the incoming bipolar phase-detected video signals. A major portion of the circuits operate at a frequency of 9 Mc, this frequency being the mean operating frequency of the 2500-microsecond delay line. To obtain operation at this frequency, a 9-Mc carrier signal is generated. The incoming video is introduced by amplitude modulation of this carrier signal.

In order to time-balance received signals of adjacent pulses, circuits which delay received signals are also made part of the timing circuit. The timing circuit then generates triggers whose timing is exactly equivalent to the delay required to achieve accurate time balance. As triggers are developed at zero time, there is little or no interference between the two signals.

The 2500-microsecond delay line, W2350, is the main delay element and hence the main controlling element of pulse timing. Other circuits which add delay and are necessary to circuit function are included in both the delayed signal and the timing circuits. These circuits are the 9-Mc oscillator (V1355) and amplifiers (V1356 and V1357), and the delay amplifier (V1301-V1306).

A 1.9-microsecond delay line, W2351, is used in the signal output of the delay amplifier to make up for delay in the timing circuit, which is not common to the delay signal circuit, and also to make up for delay in the non-delay signal circuit.

In order to develop triggers using the delay line, which operates at 9 Mc, keying of the 9-Mc oscillator is necessary. A free-running multivibrator is used to turn the 9-Mc oscillator on. The multivibrator period is adjusted to turn the 9-Mc oscillator off before the initial "on" impulse has reached the end of the delay line. (The delay line time is 2500 microseconds; the multivibrator is adjusted to approximately 2400 microseconds.) After the 9-Mc signal has passed through the delay amplifier, the demodulated signal (actually a 2400-microsecond gate) is differentiated. The trigger signal, which is the delayed on impulse, then turns the multivibrator on. The on signal then produces the next on period, and so on. Therefore, the timing of the complete loop controls the operation period. As information from the multivibrator is used to develop triggers for the modulator, the pulse repetition is then set by the period of the timing circuit loop.

The circuits of the MTI repetition rate trigger amplifier consist of 9-Mc modulated oscillator V1355, two 9-Mc amplifiers V1356 and V1357, gate trigger amplifiers V1350 and V1351, carrier gate multivibrator V1353B and V1354, trigger generator V1353A, and trigger output amplifier V1352.

The carrier gate multivibrator uses the cathode, control grid, and screen grids of V1354 for one triode section of the multivibrator, V1353B being the other multivibrator triode section. Otherwise, the operation of the multivibrator is conventional, with R1365 controlling the operating period by adjusting the V1354 grid circuit time constant.

The plate circuit of V1354 contains the 9-Mc oscillator inductance, which is capacity-coupled (C1368) to grid No. 1 of the modulated oscillator, V1355. The oscillator section of V1355, besides grid No. 1, consists of the screen grid and the cathode. Negative resistance to sustain oscillations is obtained by making the cathode of V1355 reactive by the choice of the proper value of cathode capacitor C1357. Actually the circuit is the equivalent of a grounded-plate Colpitts oscillator.

During the multivibrator off period, V1354 is conducting heavily, which effectively grounds the grid end of the oscillator coil. When the multivibrator is turned on, the plate current of V1354 is cut off, and therefore, the oscillator section of V1355 will operate and produce a 9-Mc signal. The frequency-determining portion of the oscillator consists of L1355, the plate-to-ground capacitance of V1354, the grid-to-ground capacitance of V1355, and stray circuit reactances.

The phase-detected video signals from the 60-Mc amplifier are fed to grid No. 3 of V1355. Thus, the 9-Mc signals appearing in the plate circuit of V1355 are amplitude-modulated by the phase-detected video signals. The degree of modulation is set at approximately 30%. A 9-Mc trap is included in the No. 3 grid circuit of V1355 to prevent 9-Mc signals from getting back into the 60-Mc phase detector circuit.

The modulated 9-Mc signals then are amplified by V1356 and V1357. Gain is controlled by DELAY LINE INPUT control R2352, which is part of a voltage divider circuit (R2352 and R1377) and controls the cathode bias of V1356.

Inductances L1363 and L1365, in the output circuit of V1357, lower the impedance of the signal circuit to feed signal voltage to the 2500-microsecond delay line through a 90-ohm cable. The output signal voltage to the nondelay amplifier is attenuated 10 db so that signal input voltages to the delay and nondelay amplifiers are more nearly equal. Voltage from the output circuit of V1357 is also rectified by CR1350 to develop dc across capacitor C1385, the dc being used in the metering circuit to provide an indication of output level.

As indicated above, the carrier gate multivibrator V1353B and V1354 is triggered on by a demodulated signal from the output of the delay amplifier. This output consists of a negative gate which may be modulated by either positive or negative video signals.

The output of the delay amplifier is fed to the grid of V1350. The gate signal is differentiated across the input coupling capacitor so that the leading edge of the gate produces a negative trigger signal at the grid of V1350.

To limit the static tube current, V1350 is operated at zero bias and with relatively low screen voltage. By op-

erating V1350 at zero bias, the input circuit is dc-restored. Also, the use of zero bias makes V1350 sensitive to only negative input signals.

The positive differentiated gate signal at the plate of V1350 is integrated by the use of a relatively high value of plate load resistor R1352, the shunt capacitances of C1353, and the associated circuit and tube capacitances. This provides the leading edge of the trigger signal with a slope of approximately 3 microseconds. C1353 is variable to permit a slope adjustment.

The positive signal is then applied to the grid of the cutoff amplifier, V1351. V1351 is operated with bias which is adjustable from 1-1/2 to 6 times cutoff. The bias, obtained in the cathode circuit by a voltage divider, is adjusted by the MTI BALANCE control, either R2356 in the signal comparator or R2618 in the indicator.

As the amplitude of the signal at the grid of V1350 is approximately 50 volts, V1351 will almost instantly reach full conduction after the cutoff bias is overcome by the input signal. Therefore, as the input signal has a definite slope, the MTI BALANCE control (R2356 or R2618), by adjusting the initial bias, provides a timing adjustment of the trigger signal developed in the plate of V1351. As the signals from V1351 trigger the carrier gate multivibrator V1353B and V1354, the trigger timing adjustment affects the timing circuit period.

The multivibrator trigger circuits of V1350 and V1351 add time to the pulse interval. Since this added delay time is not included in the delayed signal circuit, which consists of the quartz delay line W2350 and the delay amplifier, the delayed signal circuit would be short by the amount of time consumed in the multivibrator trigger circuits. To make the delayed signal circuit time equal to the pulse interval time, a 1.9-microsecond delay line, W2351, is added in the output circuit between the delay amplifier and the video balancer and amplifier. This 1.9-microsecond delay is a value which permits the pulse interval to be adjusted by MTI BALANCE control R2356 in the trigger circuit, both above and below the total delayed signal circuit time.

Amplifier V1351 is d-c-coupled to the multivibrator and shares plate load resistor R1361 with V1353B. It can therefore be seen that the negative trigger signals will trip the multivibrator only when the multivibrator is off, the off period starting approximately 2400 microseconds after the multivibrator is triggered.

To develop triggers for the modulator, the gating signal is applied to the grid of shocked oscillator V1353A. V1353A is essentially a cathode follower having a tuned circuit L1352 and C1363 in series with the cathode circuit.

The grid circuit of trigger generator, V1352, is connected across the tuned circuit, with C1362 providing d-c blocking. V1352 is operated with near-cutoff cathode bias.

During the 100-microsecond off period of the carrier gate, V1353A is at maximum conduction, with its cathode current flowing through L1352. This places the ungrounded end of L1352 and C1363 at a fixed positive voltage.

When the gate is triggered, V1353A is cut off and L1352-C1363 starts into oscillation.

As the first half-cycle of oscillation is negative, little effect is produced on V1352. When the oscillation swings into its first positive half-cycle, V1352 will conduct and produce a trigger in its plate circuit. The loading across the tuned circuit produces a steep decrement in the oscillation, and only a small trigger is produced on the following positive swing of the tuned circuit. This trigger is removed by clipping in the trigger input circuit of the modulator.

The timing of L1352 and C1363 is such that the initial trigger is developed 10 microseconds after the carrier gate is turned on. The chief purpose of this 10-microsecond delay of the trigger is to prevent the false moving target, due to the beginning of the 9-Mc carrier, from appearing on the PPI and A scopes. This disturbance must be over before the indicator sweep begins. Delaying the trigger by this amount also allows time for any reflections left in the delay line from the initial impulse of the carrier gate to die out. This removes any possibility of interference in the delay line with early-received signals. Also, the 10-microsecond delay ensures that the carrier gate is triggered by the leading edge of the delayed carrier gate with no influence from received signals.

e. 2500-MICROSECOND DELAY LINE. (*See figure 2–24.*)

The long delay (2500 microseconds) and wide bandwidth (3 Mc) of the delay line are obtained by making use of the relatively slow velocity of transmission of mechanical vibrations through solids.

The ultrasonic delay line achieves its delay by converting electrical energy into acoustical energy (mechanical vibrations) and passing the vibrations through a solid medium such as fused quartz. The velocity of propagation of acoustical energy in fused quartz is approximately 151,000 times slower than electrical energy through a wire.

The 9-Mc input signal from the repetition rate amplifier is applied to an electrode which is bonded to a piezo-electric crystal. The crystal in turn is bonded to the fused quartz with a conducting material in between to serve as a ground. (This crystal is the transducer shown in figure 2–24.) Through the piezo-electric effect, the electrical signals are converted into acoustical energy (mechanical vibrations). The crystal is tightly bonded to the quartz and therefore sets up mechanical vibrations that travel through the quartz and arrive at the output transducer, which is exactly the same in construction as the input transducer. Here, however, the mechanical vibrations are converted back into electrical energy.

There is little or no distortion of the input signal in the conversion to mechanical and back to electrical energy. The delay time is 2500 microseconds, plus or minus 10 microseconds; the acoustic bandwidth is 3

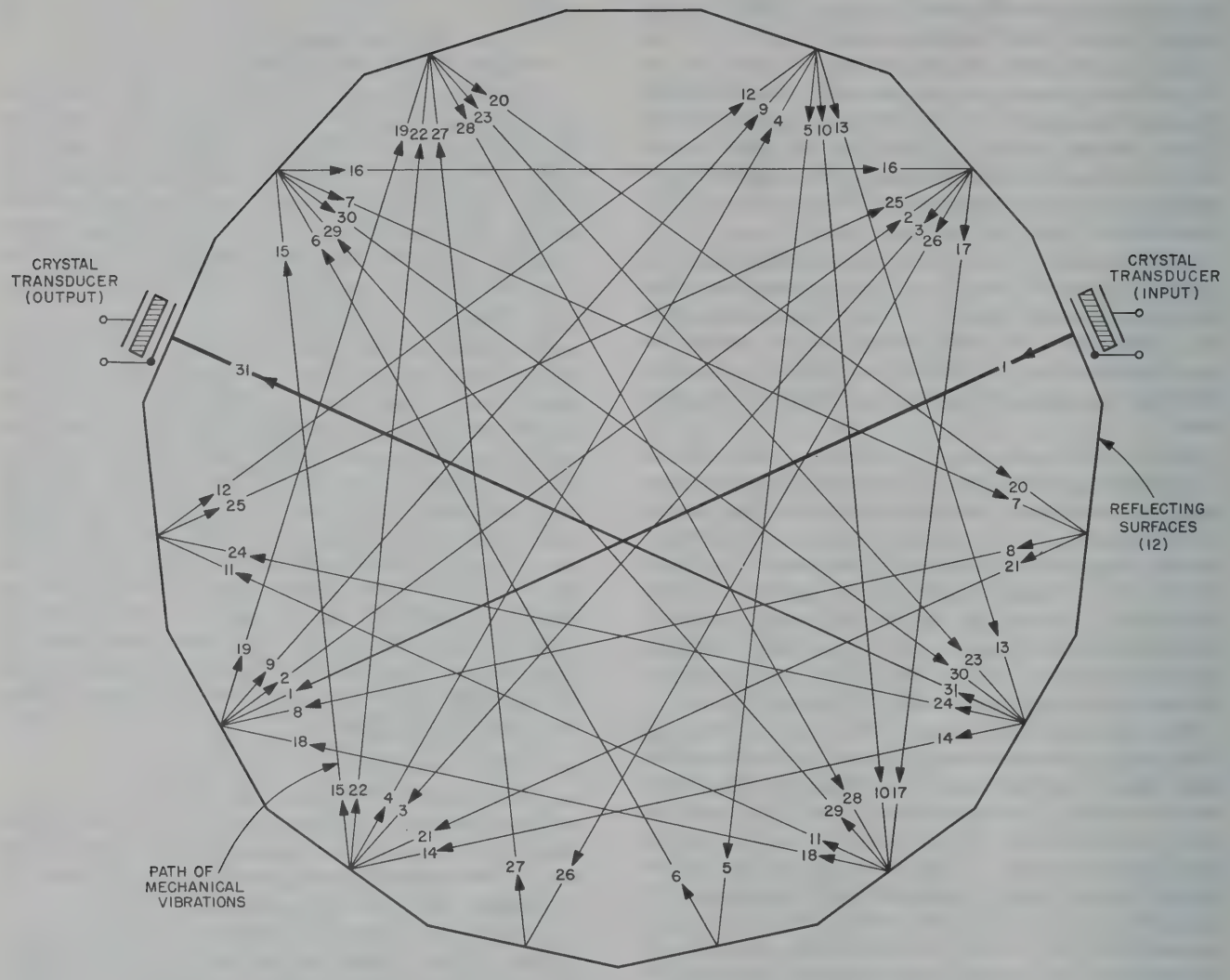

Figure 2–24. Delay Network Details

Mc; and the attenuation is less than 60 db. (The attenuation of spurious signals is at least 30 db below the desired signal.)

The transmitting medium of the line consists of fused quartz which has effectively 31 paths of mechanical vibration. The quartz and the transducers are hermetically sealed into a plated case measuring approximately 16 inches in diameter by 1-1/8 inch thick. The input and output cables are connected to female BNC connectors, which are hermetically sealed to the case and electrically connected to the input and output transducers.

There are no heater circuits associated with the line. It is designed to operate over a temperature range of from −45 to +75 degrees C (−49 to +167 degrees F). The case is mounted in the bottom of the signal comparator inner case.

f. DELAY AMPLIFIER. *(See figure 2–25.)*

The delay amplifier amplifies and demodulates the 9-Mc signals received from the quartz delay line. The video output is fed to the video balancer and amplifier for comparison with non-delayed video. The output video circuit is also connected to the MTI repetition rate trigger amplifier for generation of a 9-Mc carrier gate and repetition rate triggers.

The amplifier consists of five broad-band stages, V1301—V1305, and a full-wave second detector, V1306. The input circuit, consisting of L1301 and L1302, provides an impedance step-up from the 90-ohm input cable to the grid of V1301. Appreciable gain in signal voltage to the grid of V1301 is realized from this arrangement.

All amplifier stages are fixed-tuned to 9 Mc and broad-banded by loading resistors. The interstage tuned circuits consist of inductors L1303, L1305, L1307, and L1309, each tuned by the tube capacitances with which each inductor is associated. The gain of the amplifier is adjusted by bias control of V1301—V1304. Bias is

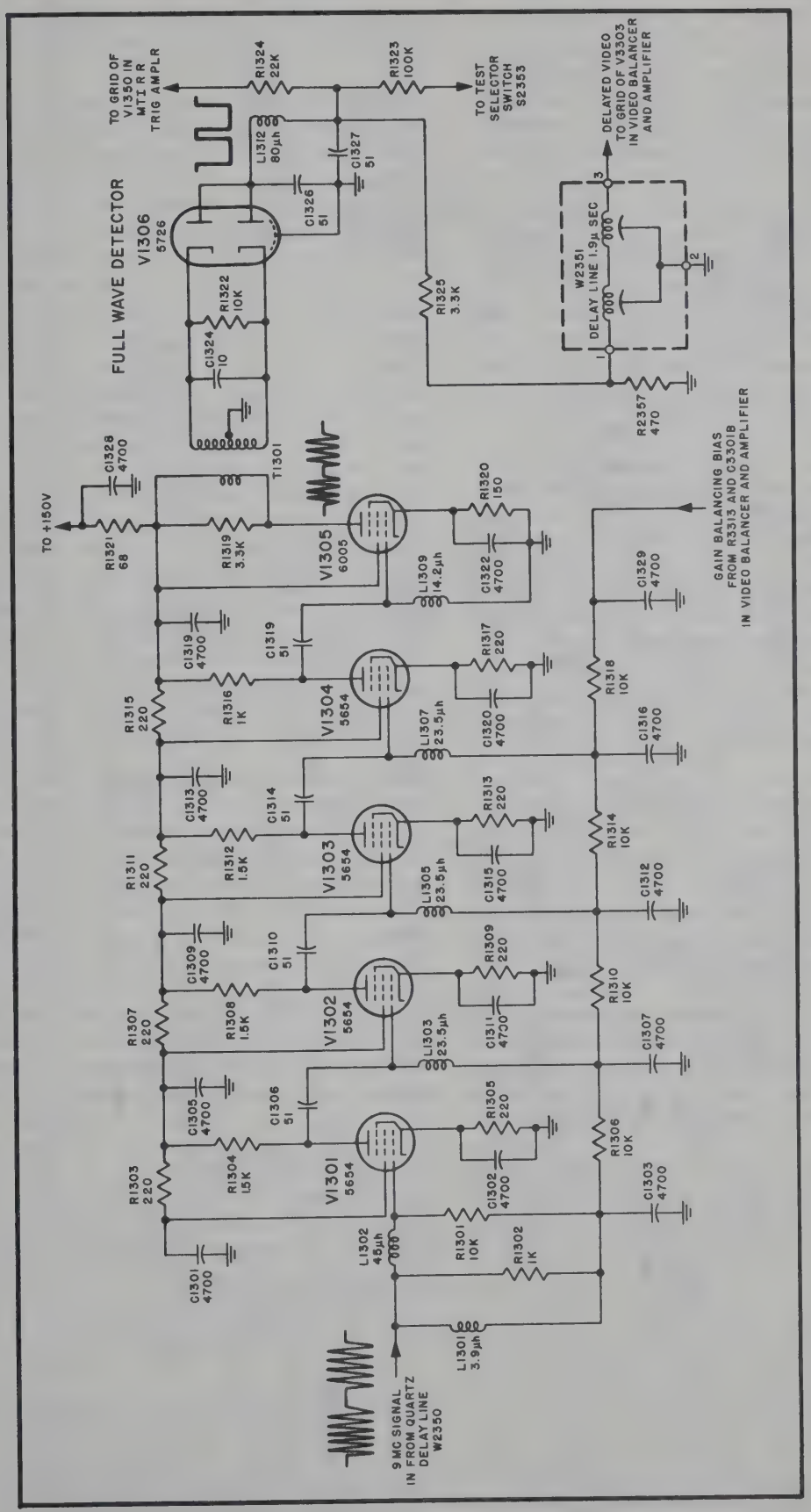

Figure 2–25. Delay Amplifier

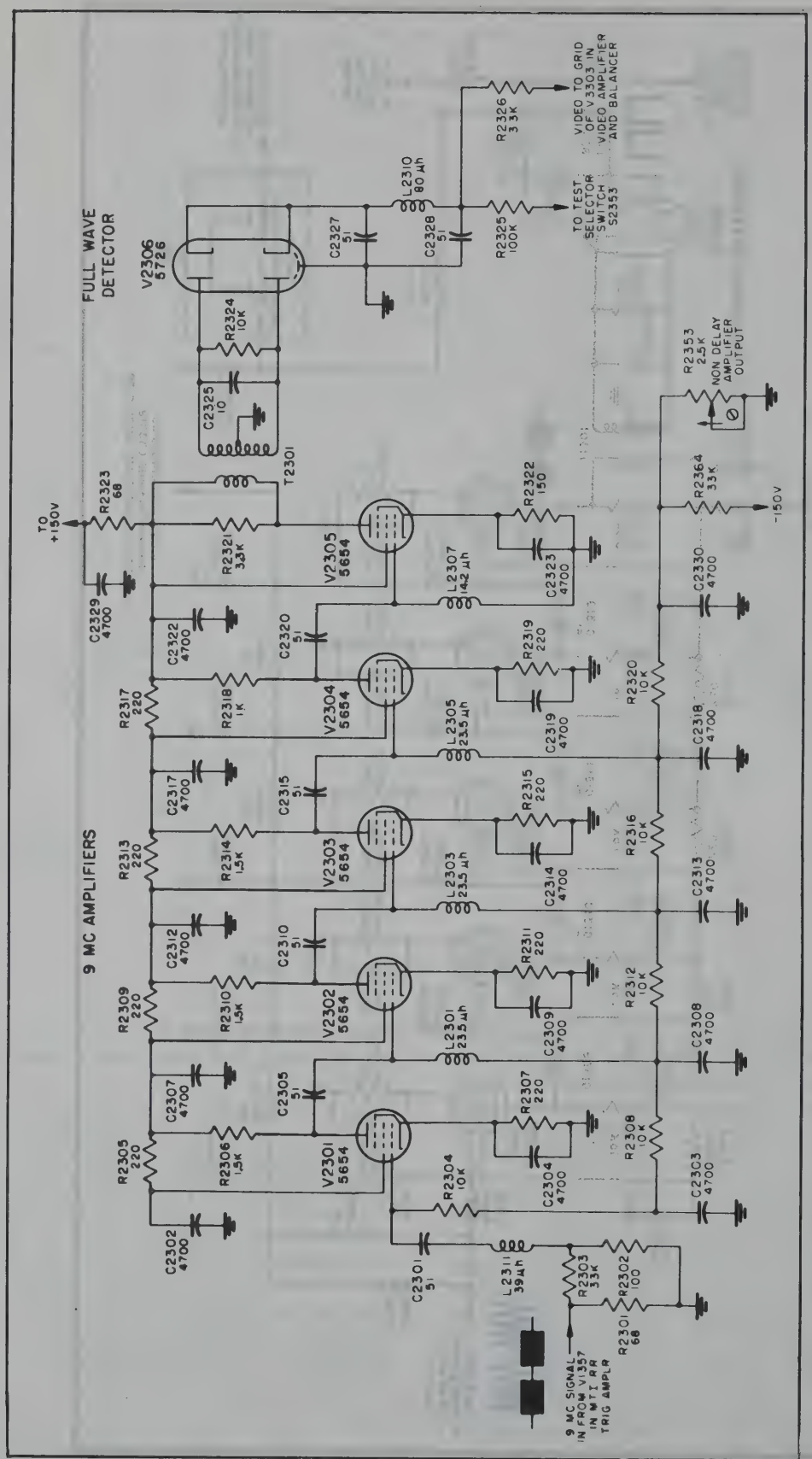

Figure 2–26. Non-delay Amplifier

derived from the video balancer and amplifier, which automatically controls the output level of the delay amplifier to match the output level of the non-delay amplifier.

The full-wave detector, V1306, is used so as to product video with a ripple frequency of twice the signal frequency of the IF amplifier. The output filter, consisting of C1326, L1312, and C1327, then is designed for better discrimination between the RF and video signals. Also, the possibility of regenerative feedback around the amplifier is reduced, as the amplifier itself will discriminate against the ripple frequency.

Video output is fed to the grid of V3303, in the video balancer and amplifier, through R1325 and the delay network, W2351. The delay of W2351, approximately 1.9 microseconds, compensates for circuit delay accumulated in the non-delay signal circuits. The frequency-vs-impedance characteristic of W2351 is somewhat nonlinear, and therefore, would present an irregular load on the detector circuit. The shunt resistor tends to improve linearity, while the series resistor R1325 minimizes the irregular loading effect on the detector circuit.

The output video circuit to V1350 in the MTI repetition rate trigger amplifier is decoupled from the detector by R1324, which also provides some integration in conjunction with the capacitance of the RG-59/U interconnecting cable. To meter the output level, dc is taken from the detector and fed through isolating resistor R1323 to TEST SELECTOR switch S2353.

g. NON-DELAY AMPLIFIER. *(See figure 2–26.)*

Attenuated signals (9 Mc) from V1357 in the MTI repetition rate trigger amplifier are amplified and demodulated by the non-delay amplifier. The output video signals are fed to V3303 in the video balancer and amplifier, where they are compared with video from the delay amplifier.

With the exception of the gain control and the input and output circuits, the non-delay amplifier is identical to the delay amplifier described above. The amplifier tubes are V2301—V2305, and V2306 is the detector. The two amplifiers are made nearly identical so that the non-delayed and delayed circuit characteristics produce video which matches in waveform.

The 9-Mc signal to the non-delay amplifier is attenuated approximately 60 db, 10 db of the attenuation being in the output circuit of V1357 in the MTI repetition rate trigger amplifier and 50 db being in the input circuit of V2301. This amount of attenuation represents the maximum amount of loss possible in the quartz delay line, W2350, and also the attenuation of W2351, both of which are in the delayed signal circuit. Thus, the output levels of the two circuits are made approximately equal.

The input inductance, L2311, tunes the input circuit to 9 Mc. The series grid capacitor, C2301, serves only to isolate the d-c bias voltage.

The gain of the amplifier is adjusted by R2353, which controls the bias voltage to V2301—V2304. R2353 is in a voltage divider circuit between the —150-volt supply and ground.

The detector circuit of V2306 is the same as that of the delay amplifier, except that the diode V2306 is poled to give positive video signals instead of negative. Therefore, when the outputs of the non-delay and delay amplifiers are combined (at the grid of V3303 in the video balancer and amplifier), the two signals cancel.

The positive video output signal, besides being fed to V3303 in the video balancer and amplifier, is also passed on to TEST SELECTOR switch, S2353, in the metering circuit. The metering circuit is isolated from the detector circuit by resistor R2325. The circuit is d-c coupled to the metering circuit, average d-c values being used to set the amplifier output level.

h. VIDEO BALANCER AND AMPLIFIER. *(See figure 2–27.)*

In this section of the signal comparator, video signals from the delay and non-delay amplifiers are combined; and the difference signal voltage, if any, is amplified, limited, and fed to the indicator for MTI display. As MTI video input signals can be either positive or negative, a circuit is included which brings MTI video signals to one polarity. Separate video amplifiers are used for MTI and normal radar input signals, the amplifiers being arranged for video limiting. Video output signals for remote indicator use are made available on a separate low-impedance circuit. The selection of either MTI or normal radar signals is accomplished by relay operation.

Bias voltage for controlling the gain of the delay amplifier is also developed in this section of the signal comparator. It is by this means that the video levels of the delay and non-delay amplifiers are balanced.

The circuits of this section consist of MTI video-combining amplifier V3303, video polarizer V3304 (also includes two crystal rectifiers CR3300 and CR3301), MTI video limiter-amplifier V3305A, normal video limiter-amplifier V3305B, MTI gate V3306, normal video gate V3307, video amplifier V3311B, output cathode follower V3308 for indicator, and output cathode follower V3309 for repeater PPI. The bias for controlling the gain of the delay amplifier is developed by regulator tubes V3300 and V3302, and d-c amplifier V3301.

The video signals, together with second-detector d-c components, are fed to the grid of V3303 from the delay and non-delay amplifiers. The series resistors, R3302 and R3303, provide isolation between the two signal input circuits.

As the d-c components are of opposite polarity, they cancel at the grid of V3303 when the second-detector levels of the two circuits are in balance. If the d-c levels are not equal, the difference voltage is developed across C3311 in the grid return of V3303. This voltage is used to develop delay amplifier bias (explained below) and thus balance the d-c levels of the two input signals.

The two video signals are also of opposite polarity, and if they are of equal amplitude (as received from

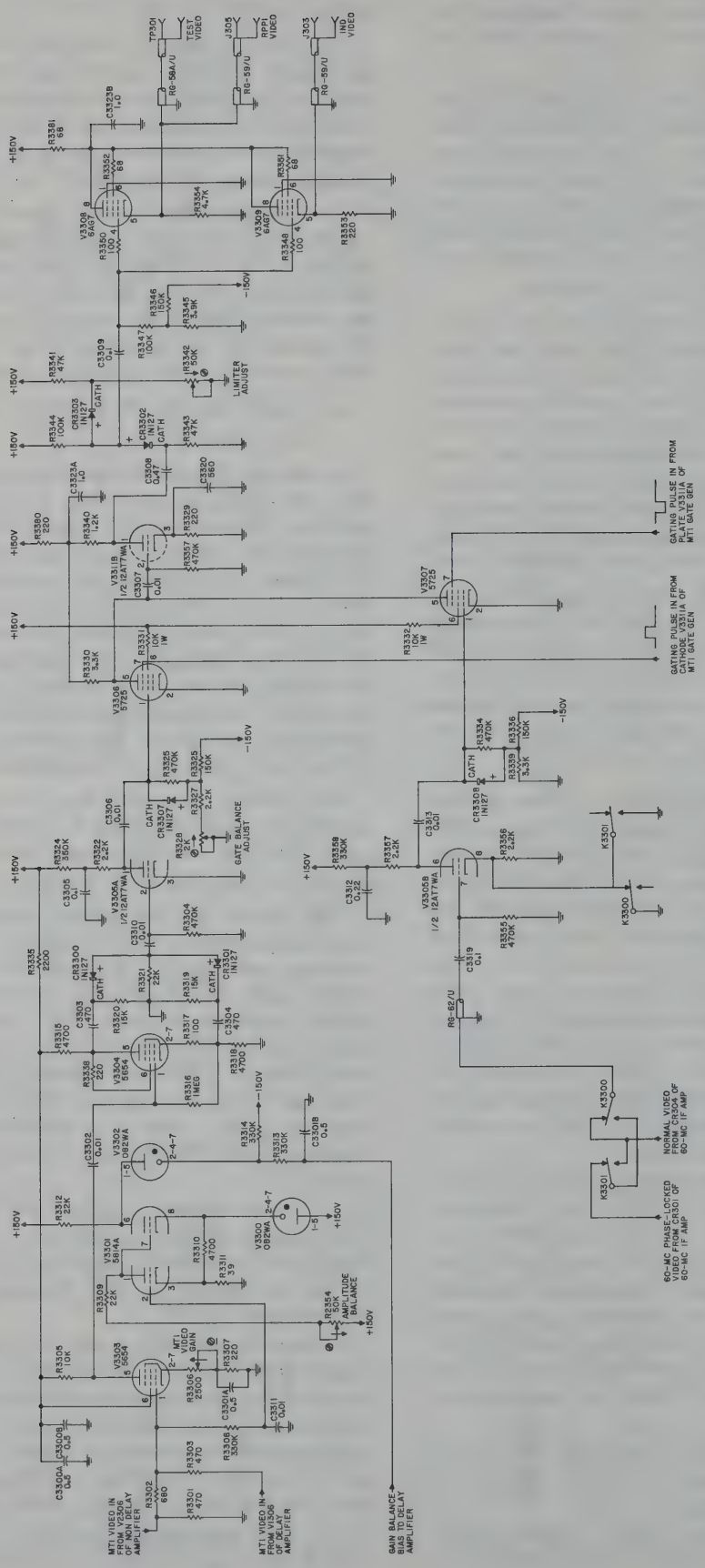

Figure 2–27. Video Balancer and Amplifier

fixed targets), they cancel and no signal is applied to the grid of V3303. However, signals, as received from moving targets, generally have different video amplitudes, and therefore, the difference voltage is applied to the grid of V3303. This video difference voltage has negligible effect on the gain-balancing circuit because the integrated signal voltage developed across C3311 is negligible.

As the resultant video signal can be either positive or negative, V3303 is operated with normal bias (cathode) for class A operation. The gain of V3303 is controlled by MTI GAIN control R3306, which is unbypassed and therefore controls the amount of cathode circuit degeneration.

The signal amplified by V3303 is fed to V3304, which has equal load resistance (R3315 and R3318) in both the plate and cathode circuits. Video signals of equal amplitude but of opposite polarity are thus developed.

Output signals from the plate circuit of V3304 are fed to crystal diode CR3300, and those from the cathode circuit are fed to CR3301, also a crystal diode. Both crystals are connected so as to develop negative video signals across the common load resistor, R3321. Therefore, regardless of the polarity of video input signals, only negative signals result, the diode which conducts being the one receiving negative video signals.

The negative video signals are fed to the zero-biased MTI video amplifier, V3305A, where limiting is accomplished by operating the stage at a very low plate voltage. Positive signals are passed through C3306 to the grid circuit of V3306, the MTI gate. The voltage divider network consisting of R3325, R3327 and R3328 establishes a bias of approximately −3 volts on V3306. CR3307 is a d-c restorer which conducts when the signal tries to go below −3 volts, and thus sets the d-c level. GATE BALANCE control R3328 permits adjusting the bias so that the MTI d-c level of V3306 can be made equal to that of the normal video level of V3307. The circuitry and action of V3305B (normal video amplifier) and V3307 (normal gate) is identical with V3305A and V3306 respectively, except for the absence of a bias adjustment, and the inclusion of the relay circuits of K3300 and K3301.

Relays K3300 and K3301 operate to close the cathode and grid circuits of V3305B. When OPERATION SELECTOR S2354 is in COHO ADJUST position, K3300 operates to include the cathode degeneration resistor, R3356, and thus decrease the gain of V3305B. During NORMAL and GATED MTI operation, K3300 and K3301 feed normal video from CR304 of the 60-Mc IF amplifier to the grid of V3305B. During COHO ADJUST, 60-Mc phase-locked signals are fed to the grid of V3305B through alternate contacts of K3300 and K3301.

The outputs of V3305A and V3305B are fed to the control grids of V3306 and V3307 respectively. Both signals are positive, and V3306 and V3307 are both operated with approximately −3 volts on their grids; however, actual conduction is a function of the gating pulse, fed to the suppressor grid of each stage, from the MTI gate generator. While one stage is conducting as a result of positive signal (gate-pulse) to its suppressor grid, the other stage is cut-off due to a negative signal to its respective grid. The conducting stage is then cut-off and the original cut-off stage conducts. Thus, gated MTI is produced by electronic switching of normal radar or MTI signals to the indicator.

The parallel-connected plates of V3306 and V3307 then pass the signal on to V3311B, where both normal and MTI signals are amplified. Limiting is accomplished by operating the stage into the diode-limiting circuit consisting of CR3302, CR3303, R3341 R3342, R3343, and R3344. With no signal applied, CR3302 is conducting continuously and the voltage divider R3344/R3343 establishes the voltage across R3343 at approximately 50 volts. LIMITER control R3342 is adjusted for a voltage of approximately 54 volts at the junction of R3342 and CR3303. When the positive video signals are passed through C3308 and applied across R3343, CR3302 ceases to conduct, and the stray capacity existing between ground and the junction of the two diodes immediately starts charging towards 150 volts. The capacity is very small and the rise time is therefore very small. When the plate side of CR3303 tries to rise above the cathode side, the diode conducts and limits the signal level to the voltage set by R3342.

The limited video signals from V3311B are fed to cathode followers V3308 and V3309, whose grid circuits are parallel-connected, but whose cathode circuits provide separate outputs. V3309 feeds video signals to the indicator via J303. V3308 provides video on a 70-ohm circuit for remote indicator use, a 150-ohm 1-watt resistor being required at the indicator end of the circuit. The output of V3308 also is available at test point TP301 for tuning purposes. It is also necessary to use a 150-ohm resistor across the meter or other test equipment when using TP301.

In developing bias for automatic gain control of the delay amplifier, the difference in the second-detector d-c voltages of the delay and non-delay amplifiers is used for reference. This differential voltage is amplified, and used for bias gain control of the delay amplifier. This requires a d-c amplifier which has no d-c in its output circuit when there is no d-c applied to the input circuit. The requirement is met by the use of the two-stage d-c amplifier, V3301A/B, and the two 108-volt regulator tubes, V3300 and V3302. Reference voltage is derived across C3311 as described above.

When AMPL. BALANCE control R2354 is in its mid-position, there is approximately +40 volts at the plate of V3301A and also approximately +40 volts at the grid of V3301B. V3300 maintains the cathode of V3301B at +42 volts, with a resultant V3301B bias of approximately −4 volts.

Regulator V3300, besides holding the cathode bias of V3301B at a fixed value, maintains the cathode bias of V3301A nearly constant. The static condition of the amplifier is thus stabilized.

When the d-c output level (measured at the junction of C3301B and R3313) is zero, the voltage at the plate

of V3301B is 108 volts. As V3302 is connected between the plate of V3301B and the output circuit, and as the drop across V3302 is maintained at 108 volts, the output voltage will be 108 volts subtracted algebraically from the plate voltage of V3301B, or zero volts.

It is possible to have either negative or positive output voltage because the current circuit of V3302 is returned to −150 volts through R3314. R3314 is made several times greater than the V3301B plate load resistor R3312, so the voltage developed across R3312 is mainly controlled by the plate current of V3301B.

With zero volts output, the gain of the delay amplifier is high. Therefore, when the input video levels are balanced by AMPL. BALANCE control R2354, the output voltage is slightly negative to reduce the gain of the delay amplifier. Automatic balancing bias voltage then varies above and below this negative-value. The time constant of the d-c amplifier input circuit (R3308 and C3311) and output circuit (R3313 and C3301B) is approximately one-sixth of a second, thus enabling the balancing circuit to carry over gating periods of the timing circuit and also to follow only averaged trends.

i. MTI GATE GENERATOR.
(See figure 2–28.)

In this section of the signal comparator are generated the gating pulses which key in the normal and MTI video, in their correct sequence, for gated-MTI operation.

The gate pulses are generated in the phantastron circuit of V3312. A phantastron is a circuit for producing a controllable delay time, and functions in much the same way as a conventional multivibrator using two triodes. One section of the multivibrator is comprised of the cathode, control grid and screen grid (plate circuit); the other section being the cathode, suppressor grid (control grid) and plate. The action of the multivibrator is to produce square waves at the screen grid of the phantastron, which are then used for gating. The section having the screen grid as the plate is the normally on tube, and the other section the normally off tube. During this normal condition, the output of the gate generator is enabling the normal video circuits in the video amplifier and disabling the MTI circuits. When a negative trigger pulse is applied to the phantastron from the repetition rate generator (through diode V3310A and cathode follower V3310B) a switching action occurs, the result of which is the generation of a pulse which enables the MTI circuits and disables the normal video circuits. The duration of this pulse determines the point (in time and, consequently, in range) at which the system switches from MTI to normal operation. The pulse duration is a function of the voltage to which C3315 charges. Diode V3310A and MTI RANGE GATE control R603, provide a means of controlling the pulse duration, by controlling the voltage to which C3315 can charge. Adjusting R603, which is located on the front panel of the indicator, changes the voltage applied to the cathode of V3310A. Since the plate of this diode is connected to the plate of the phantastron, when the

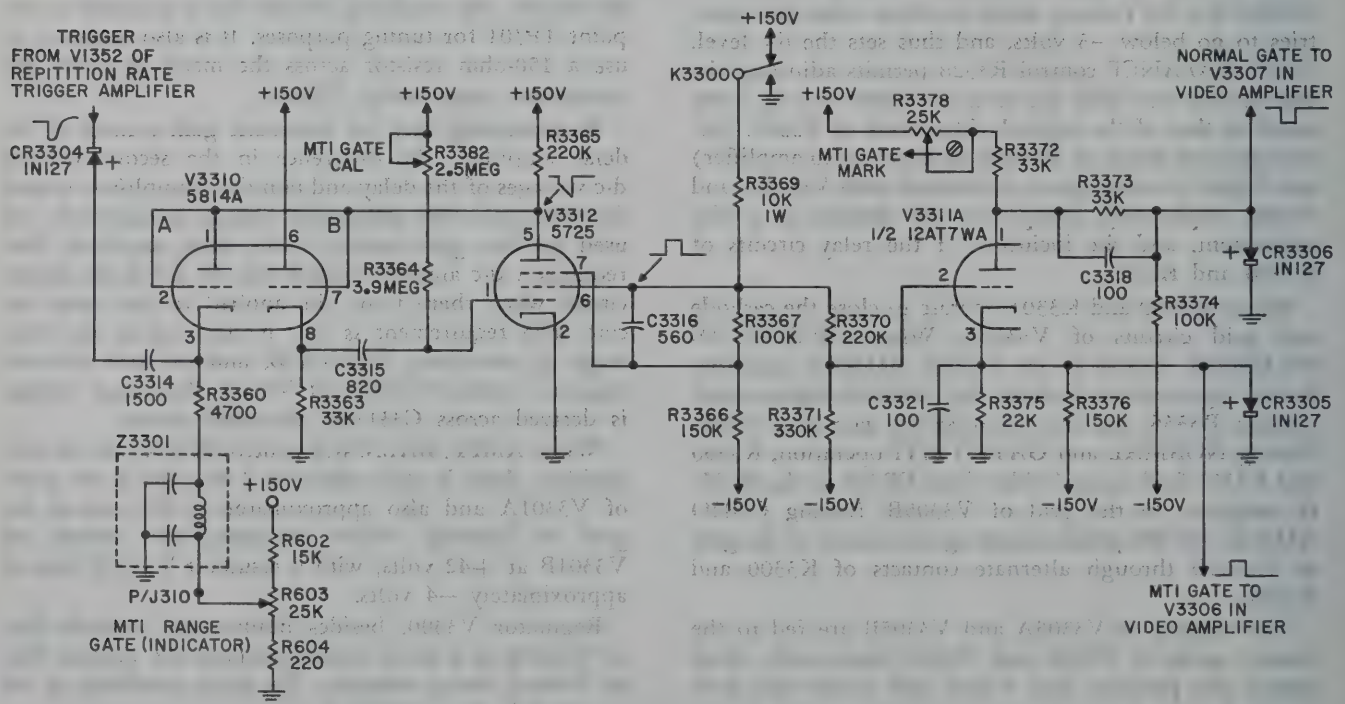

Figure 2–28. MTI Gate Generator

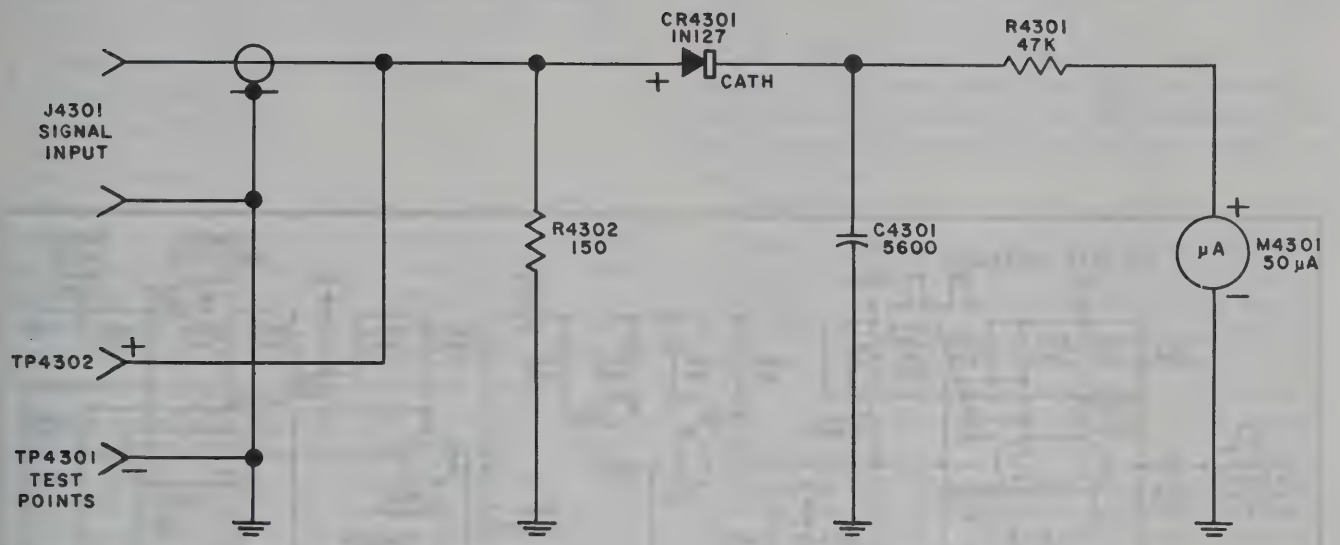

Figure 2–29. Signal Comparator Test Set Schematic

plate voltage of the phantastron reaches the value of the cathode voltage, the diode conducts and clamps the voltage to which C3315 can charge. C3315 has a very constant discharge rate, so that the change in pulse duration is almost a perfectly linear function of the change in voltage at the tap of R603. This control is calibrated directly in miles.

The MTI GATE CAL. control R3382, also affects the charging time of C3315 and provides the means by which R603 can be calibrated. MTI RANGE GATE control R603 is set to 160 and R3382 is adjusted so that the MTI-gate marker coincides with the 160-mile marker on the A scope.

MTI GATE MARK control R3378 adjusts the intensity of the MTI-gate marker. The marker is produced by a small overlap of the trailing edges of the two gate pulses. R3378 varies the time constant of the plate circuit of V3311A and consequently changes the waveshape of the gate pulse by varying the slope of the trailing edge of the pulse. This in turn varies the amount of overlap of the plate and cathode pulses and thereby varies the intensity of the marker.

Cathode follower V3310B reduces the time necessary to charge C3315. In the absence of the cathode follower C3315 would have to charge through the plate load of V3312, and a long period would be required after the pulse before the circuit was ready for the next trigger.

The output of the phantastron is taken off the screen grid, the wave form being a positive square wave. This signal is directly coupled to the grid of phase splitter V3311A. The outputs of V3311A are identical in amplitude and waveform but of opposite polarity. The cathode of V3311A is connected to the suppressor grid of the MTI gating stage V3306 while the plate of V3311A is connected to the suppressor grid of V3307, the normal video gating amplifier. Thus, the positive going pulse keys in the MTI stage at the beginning of the receiving period while the normal stage is cut off. At a point determined by the setting of MTI RANGE GATE control R603, the MTI stage is then cut off and the normal stage conducts. At the end of the receiving period (2500 microseconds) the trigger pulse triggers the phantastron and the cycle is repeated with the MTI circuits again being enabled.

Diodes CR3305 and CR3306 clamp the gating pulses to ground. CR3304 prevents any positive signal from triggering the phantastron. Z3301 is a line-noise filter, which prevents any transient signals from affecting the operation of the MTI circuitry. Relay K3300 operates to remove screen voltage from the phantastron during normal operation thereby disabling the gate generator. In the absence of gate pulses, V3307 conducts continuously while V3306 remains cut-off.

5. SIGNAL COMPARATOR TEST SET TS-1002/TPS-1G.

(See figure 2–29.)

The signal comparator test set (tuning meter) is a conventional diode-rectifier average d-c reading meter circuit. It is connected to TP301 on the signal comparator by any convenient length of RG-58A/U cable. The 150-ohm resistor, R4302, correctly terminates the cathode of video amplifier V3308. In practice, the meter is used to align the first stage of the 60-Mc IF amplifier by adjusting C305 for maximum reading on the tuning meter. If the tuning is broad, C305 is adjusted to the center of the range over which maximum reading is obtained.

The tuning meter may also be used to adjust the re-

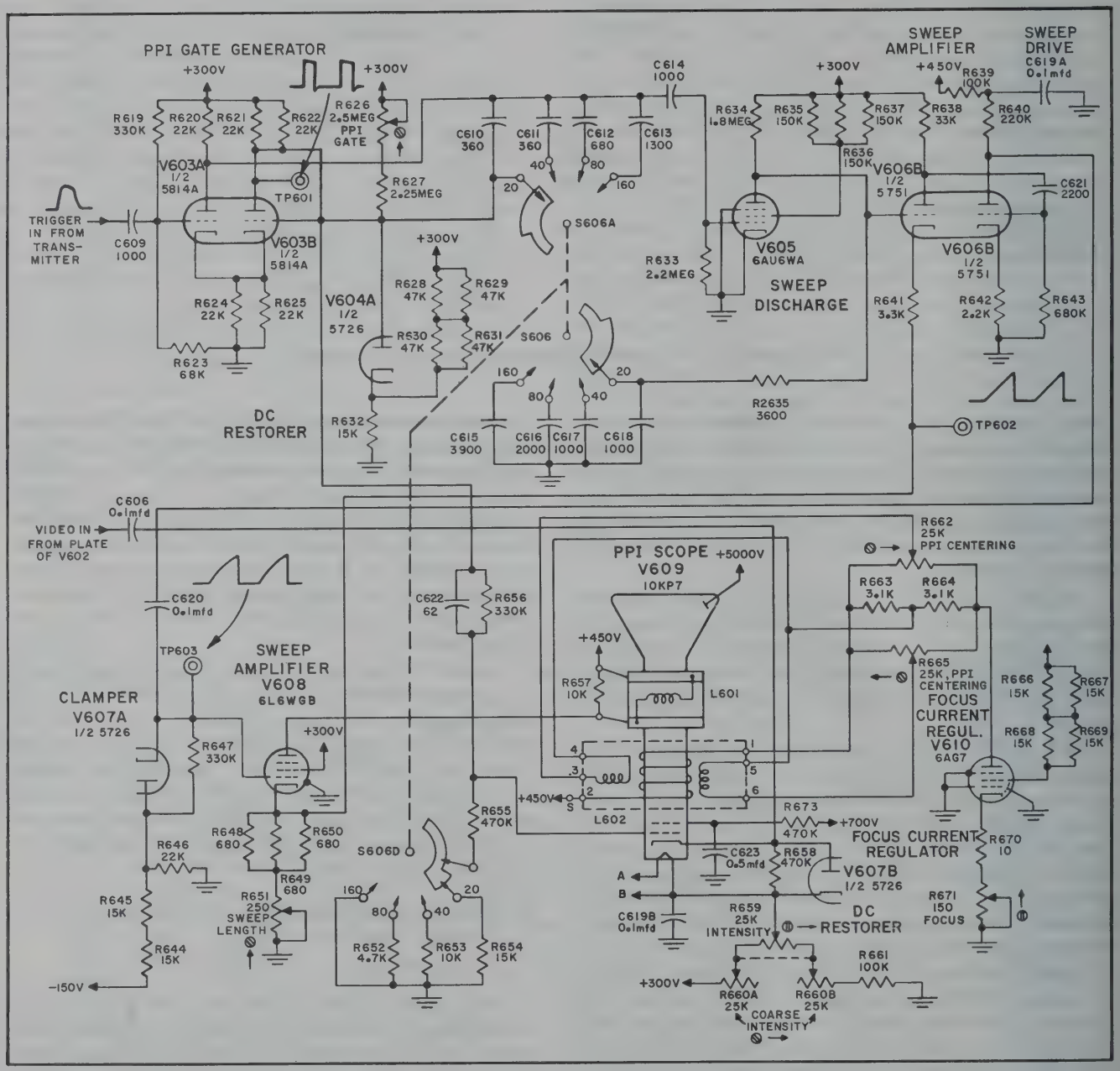

Figure 2–30. Indicator PPI Scope Sweep and Scope Deflection

ceiver gain, when operating the indicator in the remote position, by connecting the meter to the comparator by a length of cable equal to the remote indicator cable.

6. AZIMUTH AND RANGE INDICATOR IP-141A/TPS-1D.

(See figure 7—112.)

a. GENERAL.

The azimuth and range indicator accepts MTI or normal radar video signals and repetition rate trigger signals, and also has circuits for receiving IFF video signals. All input signals are received via the interconnections of the power supply unit. The unit panel contains controls not only for adjusting the indicator, but also for operating the complete equipment.

Video signals are displayed on a PPI scope and also on an A-scope. Each scope has its own gating and sweep circuits. Also, each scope circuit has its own range selector switch, the ranges being 20, 40, 80, and 160 miles. The A-scope RANGE SELECTOR switch has an additional position (EXP) which provides a 10-mile expanded sweep.

Range-marker generators provide fixed range signals for both displays. A strobe generator is included which permits A-scope viewing of any 10-mile portion (expanded sweep) of the equipment range from 20 miles up to the range limit (160 miles). A marker which provides an indication on the PPI display to show the start of the 10-mile portion being viewed on the A-scope is also generated.

An anti-jam circuit is included, which is effective on radar signals for both PPI and A-scopes. Some stages of the radar signal video amplifiers are common to both scope indicators.

The high-voltage supply circuits for the scope tubes and the filament supply for all azimuth and range indicator tubes are included in the unit. The operating circuit d-c potentials are obtained from the power supply unit.

The PPI sweep circuits consist of sweep gate generator V603A/B, gate clamper V604A, sweep discharge tube V605, intermediate sweep amplifier V606A, sweep driver V606B, sweep clamper V607A, and output sweep amplifier V608. The A-scope sweep circuits consist of sweep gate generator V622A/B, gate clamper V604B, sweep discharge tube V623, and sweep amplifier and inverter V624.

The marker circuits consist of marker gate generator V614, pulsed oscillator V615A/B, pulsed-oscillator output amplifier V616A, 5—10-mile marker blocking oscillator triggering tube V616B, 5—10-mile marker blocking oscillator V617A, blocking oscillator clamper V618A, 25—10-mile blocking oscillator triggering tube V617B, 25—10-mile blocking oscillator V618B, and marker video mixer V619B. V621A/B is the variable delay gate generator used for developing the A-scope strobe sweep.

The radar video amplifier system consists of input amplifier V611, cathode follower V612A, A-scope video mixer V619, d-c restorer V620A, A-scope output amplifier V612B, and PPI video output amplifier and mixer V602. V601 is the video amplifier and mixer for IFF signals.

Tube V607B d-c restores the video signals at the cathode of PPI tube V609. The PPI focus current is controlled and regulated by V610. High-voltage d-c for the scope tubes is obtained from the power supply circuits of V626.

b. SWEEP CIRCUITS. *(See figures 2—30 and 2—31.)*

Positive trigger signals from the modulator unit pulse circuit trip the PPI sweep gate multivibrator (one shot), V603A/B. The period of multivibrator (gate length) is determined by R626 and by one of the feedback capacitors, C610—613, as selected by section A of PPI RANGE SELECTOR switch S606. R626 is adjustable to permit compensation for variations in V603 characteristics.

To ensure that all gates trigger at the same relative point in time, the positive-biased diode V604A clamps the off-time charge across capacitors C610—C613 at the same voltage point.

A positive gate is taken from the plate of V603B and d-c coupled to the grid of PPI tube V609 through a voltage divider consisting of R655, R656, and the resistor (R652, R653, or R654) selected by section D of PPI RANGE SELECTOR switch S606. Thus, the gate signal unblanks PPI tube V609, which is biased at or near beam cut-off by INTENSITY control R659. R652, R653, and R654 compensate for the difference in PPI illumination caused by the difference in sweep speed of the four ranges. Zero resistance, which makes the unblanking signal less positive at the grid of V609, is used on the 160-mile range, where the sweep speed is the slowest. C622, shunted across R656, maintains the rise and decay time of the gate which would otherwise be integrated by R656 plus the total grid circuit capacitance of V609.

In generating the PPI sweep, a negative gate signal is taken from the plate of V603A and applied to the grid of sweep discharge tube V605. During the sweep recovery period, V605, operated with zero bias, is in full conduction; and one or more of the sweep capacitors, C615—C618, as selected by section A of S606, is near complete discharge. The negative gate cuts off V605, and the selected sweep capacitor charges towards +300 volts through the V605 plate resistor, R634. Charging continues until the gate signal goes positive, at which time the sweep capacitor is discharged by the conduction of V605. To obtain good sweep linearity, approximately one-ninth of a time constant is used on all ranges.

The generated sawtooth sweep signal (positive) is amplified by V606A and V606B in cascade.

Tube section V606B feeds its positive sawtooth voltage to the grid of V608, which supplies sawtooth current to the V609 deflection yoke L601. Thus, the beam of V609 is deflected, its static point being at the center of the screen and deflection being along a radial dependent on the position of the yoke of L601.

The grid of V608 is d-c restored by V607A at approx-

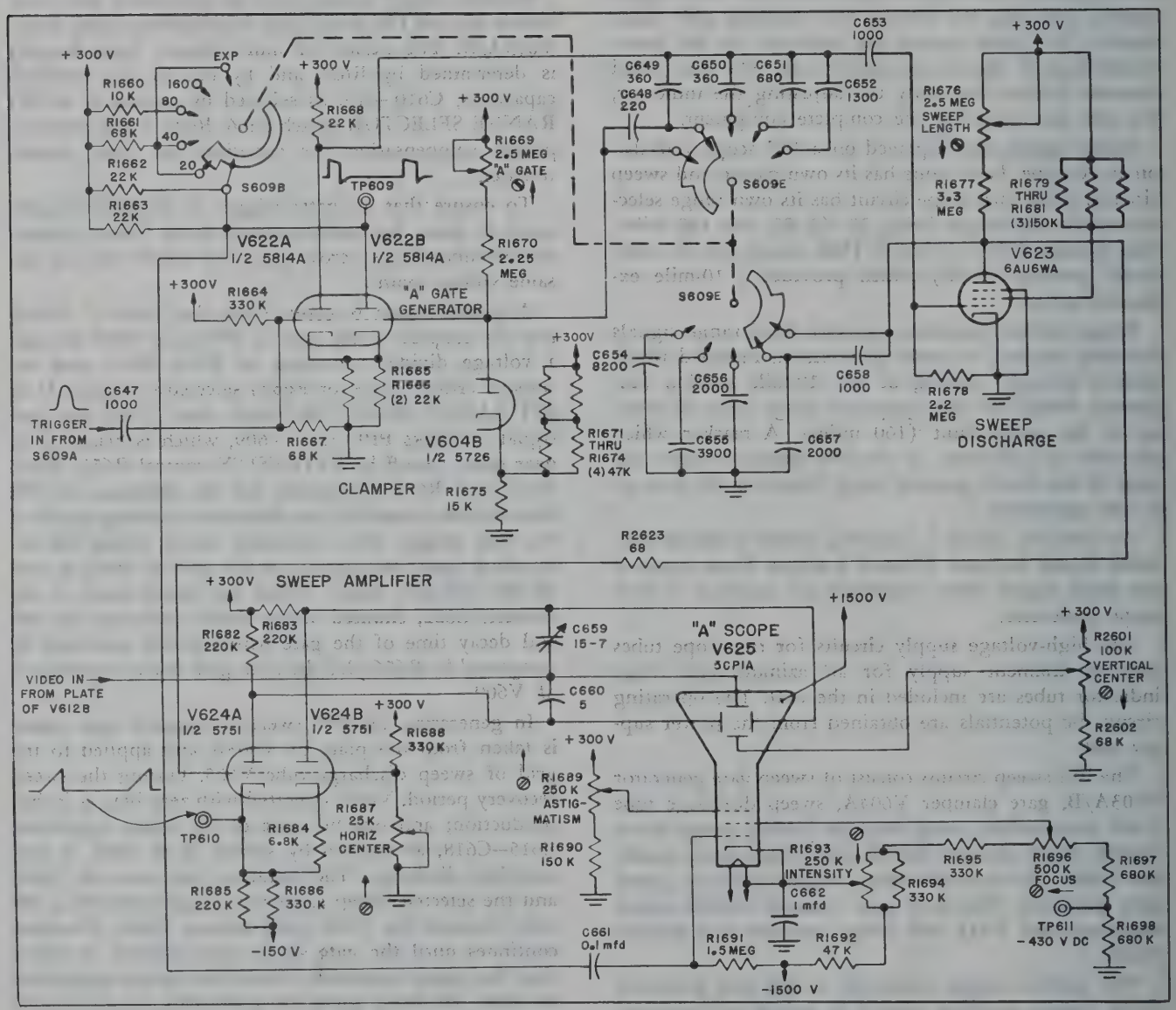

Figure 2–31. Indicator A-Scope Sweep and Scope Deflection

imately −60 volts, which is slightly below cutoff bias. This ensures that the sweep starts out at the same point on the PPI for all ranges.

The cathode resistor of V608, comprising R648, R649, R650, and SWEEP LENGTH control R651, constitutes a current-sampling resistance effectively in series with the deflection coil. By using the voltage across this resistor as a negative feedback voltage which is proportional to the plate current, the plate current (deflection coil current) is caused to be uniformly proportional to the amplifier input voltage (V606A grid). A portion of the feedback element of this amplifier, SWEEP LENGTH control R651, is made variable, permitting a suitable adjustment of the conductance (not gain) of the sweep amplifier.

The sweep circuits for the A-scope indicator are similar to those of the PPI, and are as follows (see figure 2−31.)

The sweep gate multivibrator is V622A/B, and it is tripped by the incoming triggers from the modulator. Section E of A-scope RANGE SELECTOR switch S609 (capacitors C649-C652) sets the sweep gate length of the multivibrator, while section A of S609 (in the EXP position) removes the incoming trigger signal and applies a trigger signal from the strobe circuit, V621A/B. V604B is exactly like V604A in circuitry and function, as described above.

The average gate length is adjusted by A-GATE control R1669. Inasmuch as the grid of A-scope V625 is operated at 1500 volts below ground potential, capacitor C661 is used to couple unblanking voltage from sweep gate multivibrator V622A/B to the V625 grid. The gate level required for each range is set by the V622B plate resistors R1660−R1663, as selected by section B of S609. The value of these resistors takes into consideration the averaging effect of C661.

A-scope discharge tube V623 develops sawtooth voltage for the A-scope sweep. The sweep slope for the range in use is determined primarily by one or more of the sweep capacitors, C654−C658, as selected by section E of S609. The operation of S609D is such that C657 is used on the 20-mile range; C656 and C657 in parallel on the 40-mile range; C655, C656, and C657 in parallel on the 80-mile range; C654−C657 in parallel on the 160-mile range; and C654−C657 in parallel, with C658 in series on the EXP switch position, for the 10-mile-wide strobe sweep. (The sweep gate capacitors, C648−C652, are also connected together in like manner by section E of S609.) The average sweep length is adjusted by SWEEP LENGTH control R1676, which adjusts the resistance in the charging circuit.

Sweep circuit voltage at the plate of V623 is d-c-coupled to the grid of sweep amplifier V624A. V624A/B, a cathode-coupled phase inverter amplifier, is also d-c-coupled to the horizontal deflection plates of A-scope V625. The sweep voltage electrostatically deflects the electron beam of V625 from left to right.

If the circuit is first considered with no gating voltage present, V623 would be in full conduction, and HORIZ centering control R1687 could be adjusted so that each half of V624A/B would have the same effective bias. The voltage at the plates of V624A/B would then also be equal, and the beam of V625 would be horizontally centered.

However, as the beam is to sweep from left to right, R1687 is initially adjusted so that the grid of V624B is more positive than that of V624A. With R1687 so adjusted, the starting point of the V625 beam is positioned at the left of the screen, and the bias on V624B is more positive than that on V624A. The sweep signal voltage at the grid of V624A is positive, while the effective signal at the grid of V624B is negative. Therefore, V624A/B is operated in the class A region, with the bias on each triode set to favor the polarity of input signal for minimum distortion in the output circuit.

The employment of the large common cathode resistance (R1685 and R1686) in the cathode-coupled phase inverter V624A/B causes very nearly balanced output for equal value plate load resistors R1682 and R1683. To permit the use of such a high value of cathode resistor, a negative return of −150 volts must be provided for it. R1684 is a degenerative resistance affecting the gain of V624A and V624B simultaneously by like amount, and therefore, does not upset the balanced characteristic of the plate circuits. Capacitors C659 and C660 effect a capacity balance between the horizontal deflection plates and the vertical radar signal deflection plate. C659 is made adjustable to compensate for variations in wiring and in V625 tube characteristics.

c. MARKER GENERATORS. *(See figure 2−32.)*

The incoming positive triggers from the modulator trip the one-shot multivibrator, V614A/B. This multivibrator develops a gate which initiates the marker signals with each trigger so that the markers are synchronized with each sweep. The gate width is adjusted by R691, which controls the charging voltage of the feedback capacitor C628. R691 is set for a gate width just sufficient to include the 160-mile marker. Section A of RANGE MARKS switch S608 disables the marker gate multivibrator, V614A/B, in the OFF position by dropping the bias of V614A to a point where V614A cannot be triggered by incoming trigger signals. In so doing, no marker signals are generated in the OFF position of S608.

The marker gate output signal (negative) trips the pulsed oscillator V615A/B. V615A is the clamper portion of the oscillator, while V615B, in class A operation, supplies the negative resistance necessary to sustain oscillations. V615A/B oscillates at a frequency of approximately 16 kc, the frequency or recurrence rate of the 5-mile markers.

The output of V615A/B is applied to the grid of amplifier V616A, which is operated with near cutoff bias. Therefore, only the positive half of the 16-kc input signal will be amplified. The damped plate-peaking inductance, L604, differentiates between the amplified and cutoff half-cycles to produce fast-rising 16-kc triggers. These triggers (negative) are applied to the grid of blocking oscillator keyer tube, V616B, which trips blocking oscillator V617A.

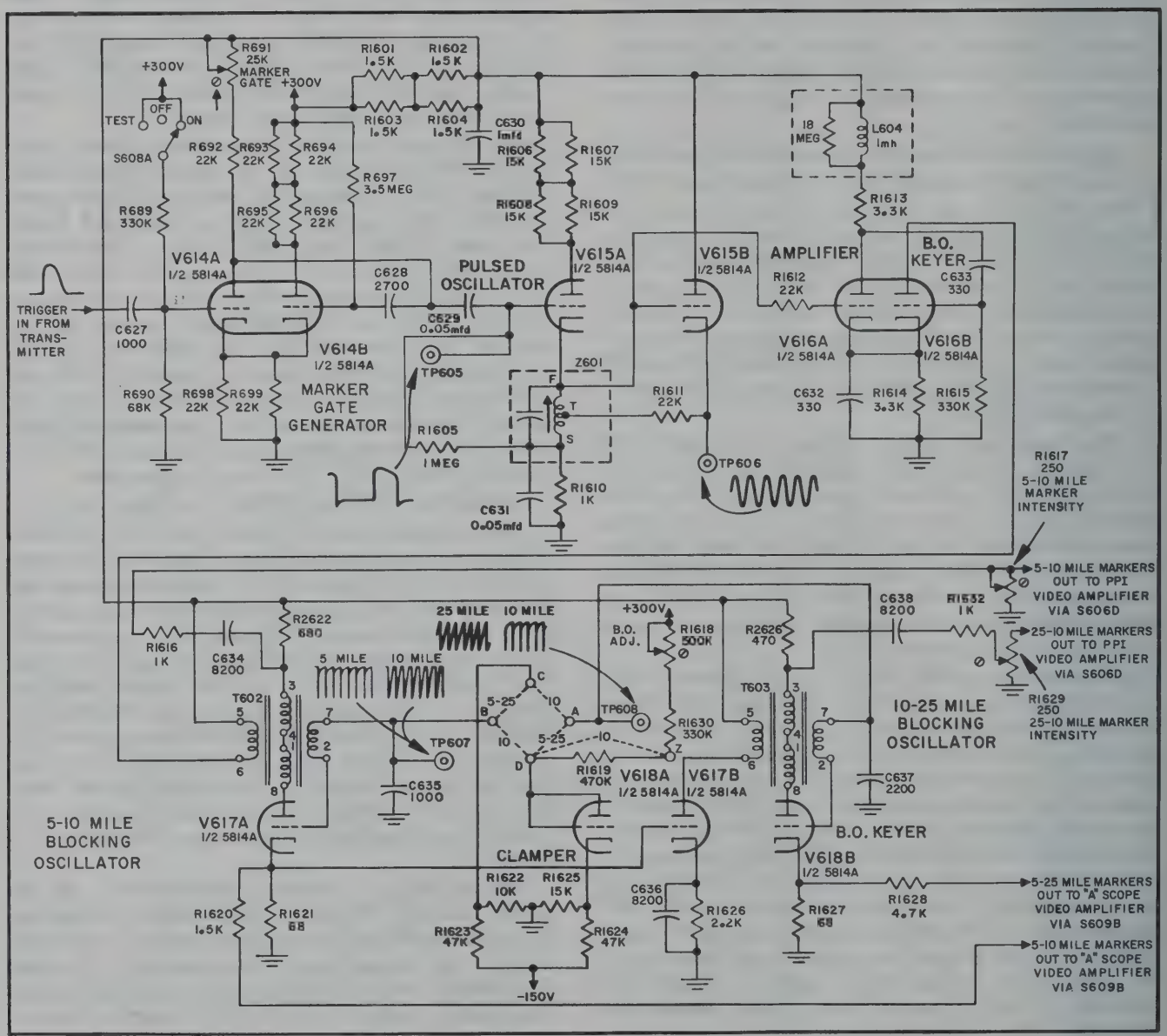

Figure 2—32. Indicator Marker Generators

Tube V617A then produces marker signals which can have either a 5- or 10-mile spacing, depending on the link connections in the grid circuit of V617A. These link connections also affect the grid circuit of the marker blocking oscillator V618B, which can produce either 10- or 25-mile markers. When the links are connected B to C and A to D, V617A produces 5-mile markers, while V618B produces 25-mile markers. When the links are connected A to C, B to D, and D to Z, V617A and V618B both produce 10-mile markers. The link connections affect the grid circuit time constants of V617A and V618B. The grid bias of both V617A and V618B is initially set well below cutoff so that, under any condition of operation, the tubes will not self-trigger.

When the connections are made for 5- and 25-mile markers, the grid circuit time constant of V617A is such that V617A will be tripped by each trigger signal. Marker signals from the cathode of V617A in turn trip blocking oscillator tube V618B via trigger tube V617B. The effective grid time constant of V618B is approximately five times that of V617A so that V618B will reset in time to be triggered by every fifth marker signal from V617A.

When the link connections are made for 10-mile markers, the effective grid circuit time constant of V617A is doubled so that V617A will be triggered by only every other incoming trigger. Thus, V617A produces 10-mile markers. The 10-mile markers from the cathode of V617A then trigger V618B through its triggering tube V617B. The V618B grid circuit time constant is such that V618B also produces 10-mile markers.

The diode-connected triode V618A is used in the grid circuit of V618B when the link connections are set for 5- and 25-mile markers. When 10-mile markers are being produced by V617A and V618B, V618A is connected in the grid circuit of V617A. In other words, V618A is used in the grid circuit of the blocking oscillator which is counting down.

Tube V618A clamps the exponential grid circuit rise of V617A or V618B, as the case may be, at a point well below the curved or leveling-off portion of the exponential curve. Rheostat R1618, which returns to +300 volts, adjusts the clamping point. By so clamping the grid circuit, the point in time at which V617A or V618B can be retriggered is made considerably more definite, and hence, ensures that retriggering will occur at the correct submultiple.

Output signals (5-mile or 10-mile markers) are taken from the V617A series plate resistor, R2622, and fed to the arm of the 5-10 MILE MKR. INT control, R1617. This adjusts the 5-10 marker level fed to the 20-mile and 40-mile positions of the PPI RANGE SELECTOR switch (S606, section D) for PPI display via the PPI video amplifier, V602. Five-mile or 10-mile marker signals also are taken from the cathode of blocking oscillator V617A and supplied to the A-scope video amplifier V619B via the 20-mile and 40-mile positions of the A-RANGE SELECTOR switch (S609, section B).

The RANGE MARKS switch S608, connected in the marker signal circuits to the video amplifiers, V602 and V619B, turns the markers on or off. The TEST position of S608 applies 5- or 10-mile markers directly from the MKR. INT. controls R1617 and R1629, through attenuating resistors R1633 and R1634, to video amplifiers V602 and V619B. When the V617A and V618B link connections are set for 5- and 25-mile markers, low-amplitude 5-mile markers appear on the 80- and 160-mile ranges of both scopes. Thus, it is possible to check the spacing of 25-mile markers by use of the 5-mile markers. When the link connections are set for 10-mile markers, the TEST position of S608 has no function, as all markers on all ranges are spaced 10 miles apart.

Output marker signals (10-mile or 25-mile) are taken from the V618B plate series resistor R2626. The marker signals then are passed on to the PPI video amplifier through the 10-25 MILE MKR. INT. control R1629, and the 80-160-mile positions of the PPI RANGE SELECTOR switch (S606, section D). Output also is taken from the cathode of V618B and supplied to the A-scope via video amplifier V619B and the 80- and 160-mile positions of the A-RANGE SELECTOR switch (S609, section E). Section C of S606 and section A of S609 ground the marker signal circuit for the markers not in use. This prevents unused marker signals from leaking into the circuits to the scopes. Grounding these signal circuits does not affect the operation of V617A and V618B, as series resistors R1616 and R1632 provide isolation for the PPI marker circuit, while series resistors R1620 and R1628 provide isolation for the A-scope marker circuit.

d. STROBE GATE GENERATOR. *(See figure 2—33.)*

The incoming trigger signals to the indicator not only trigger the marker gate and the two sweep gate multivibrators, but also the strobe gate multivibrator V621A/B. V621A/B, a one-shot multivibrator similar to the marker and sweep gate multivibrators, is used to produce a delayed trigger for initiating the strobe sweep.

Multivibrator V621A/B produces a gate or square wave which can be varied in length approximately 250 to 2000 microseconds by the RANGE STROBE control, R1657. V621B is the normally conducting section of the multivibrator, while V621A is the nonconducting section. The incoming positive triggers trip the multivibrator, with V621A then conducting and V621B cut-off. The duration of this condition is dependent on the V621B grid circuit time constant, and as R1657 is part of this circuit, the duration or gate-length is set by the position of R1657. As R1657 is in a signal-sensitive portion of the multivibrator circuit and is physically somewhat remote to the circuit, its "hot" lead requires shielding.

STROBE LIM. adjustment R1655 in the plate circuit of V621A sets the plate voltage to this tube section when conducting. R1655 therefore has some effect on the point (in time) at which V621A returns to its normally cut-off state. The range of this adjustment produces a small effect on the length of the square wave, and thus provides a means for accurately setting the relative position of the end of the square wave. In operation R1655 is adjusted so that the square wave ends at a

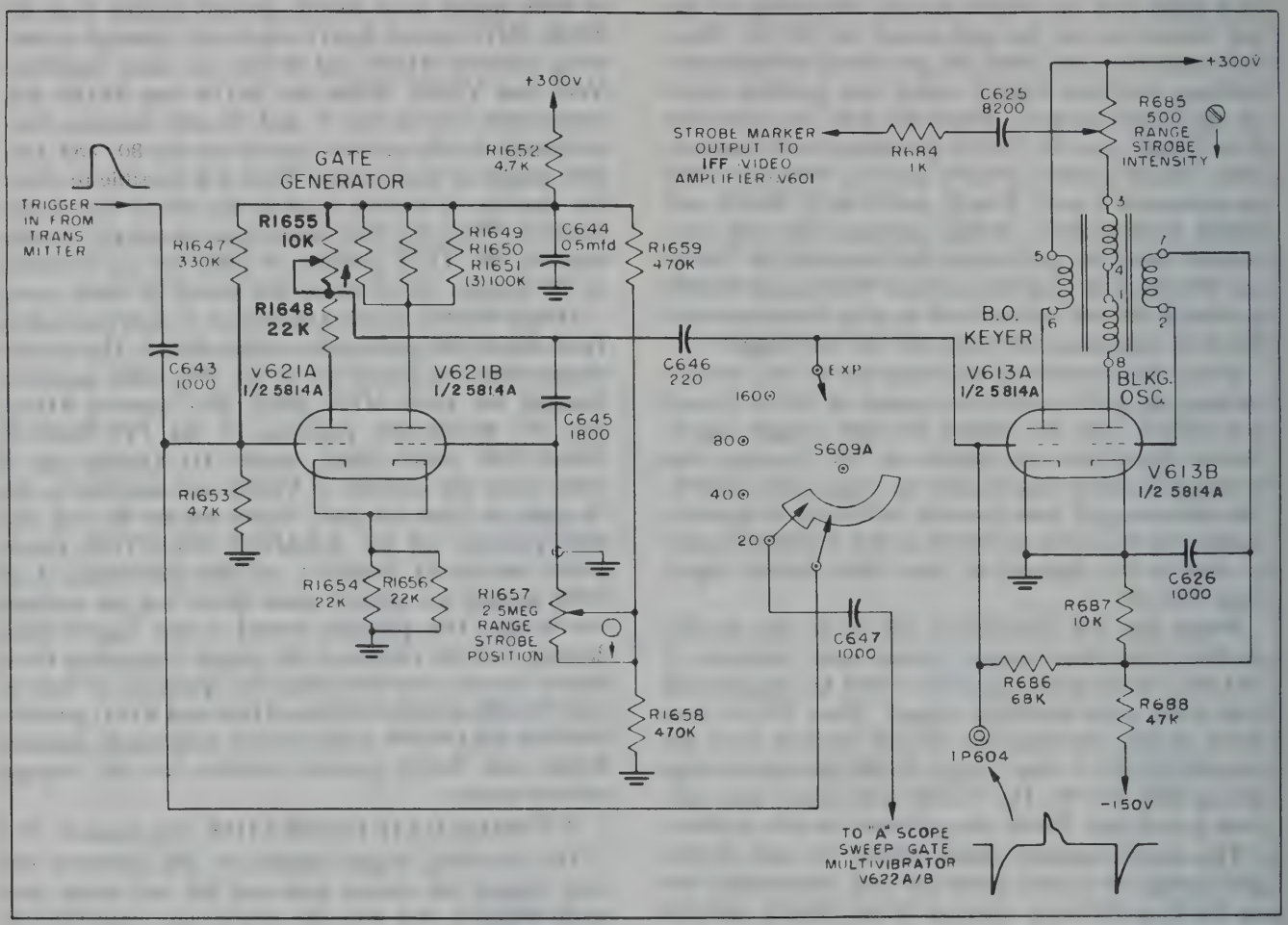

Figure 2—33. Indicator Strobe Generator

timing equivalent of 160 miles when R1657 is at its maximum position.

The gate or square-wave signal is negative at the plate of V621A, from which signal voltage is taken. The square-wave signal is differentiated across C646 so that the leading edge of the signal becomes a negative spike and the trailing edge becomes a positive spike. Therefore, as RANGE STROBE control R1657 is varied, the positive spike moves in relation to initial triggering or zero sweep time. As the square-wave signal can be varied approximately from 250 to 2000 microseconds, the timing of the positive spike can be varied over this range, which is equivalent to 20-160 miles.

To control the position of the expanded sweep, the differentiated square-wave signal is fed to sweep gate multivibrator V622A/B through the EXP (expanded) position of section A of the A-RANGE SELECTOR switch, S609. As V622A/B can be triggered only by positive signals, only the movable position spike trips the multivibrator. V622A/B turns on the A-scope beam and also initiates the 10-mile A-scope sweep, as explained under paragraph 6.*b.* above. Thus, as the gate length of V621 is varied, the position of the 10-mile sweep is varied in time corresponding to a movement of 20 to 160 miles.

To provide a PPI marker which indicates the position of the expanded A-scope sweep, the positive spike of the differentiated square-wave signal also trips blocking oscillator V613B through its keying tube V613A. V613A is biased slightly below cutoff and therefore triggers blocking oscillator V613B only from the movable positive spike of the differentiated square-wave signal.

The blocking oscillator signal (strobe position signal) is taken from the V613B plate circuit resistor R685 (STROBE INT. control). R685 adjusts the V613B signal level applied to the cathode of video amplifier V601. The strobe position signal is applied to the PPI display through the video amplifiers (explained directly below), and produces a marker whose position is controlled by the RANGE STROBE control R1657.

e. VIDEO CIRCUITS. *(See figure 2—34.)*

The incoming positive radar video signals are first

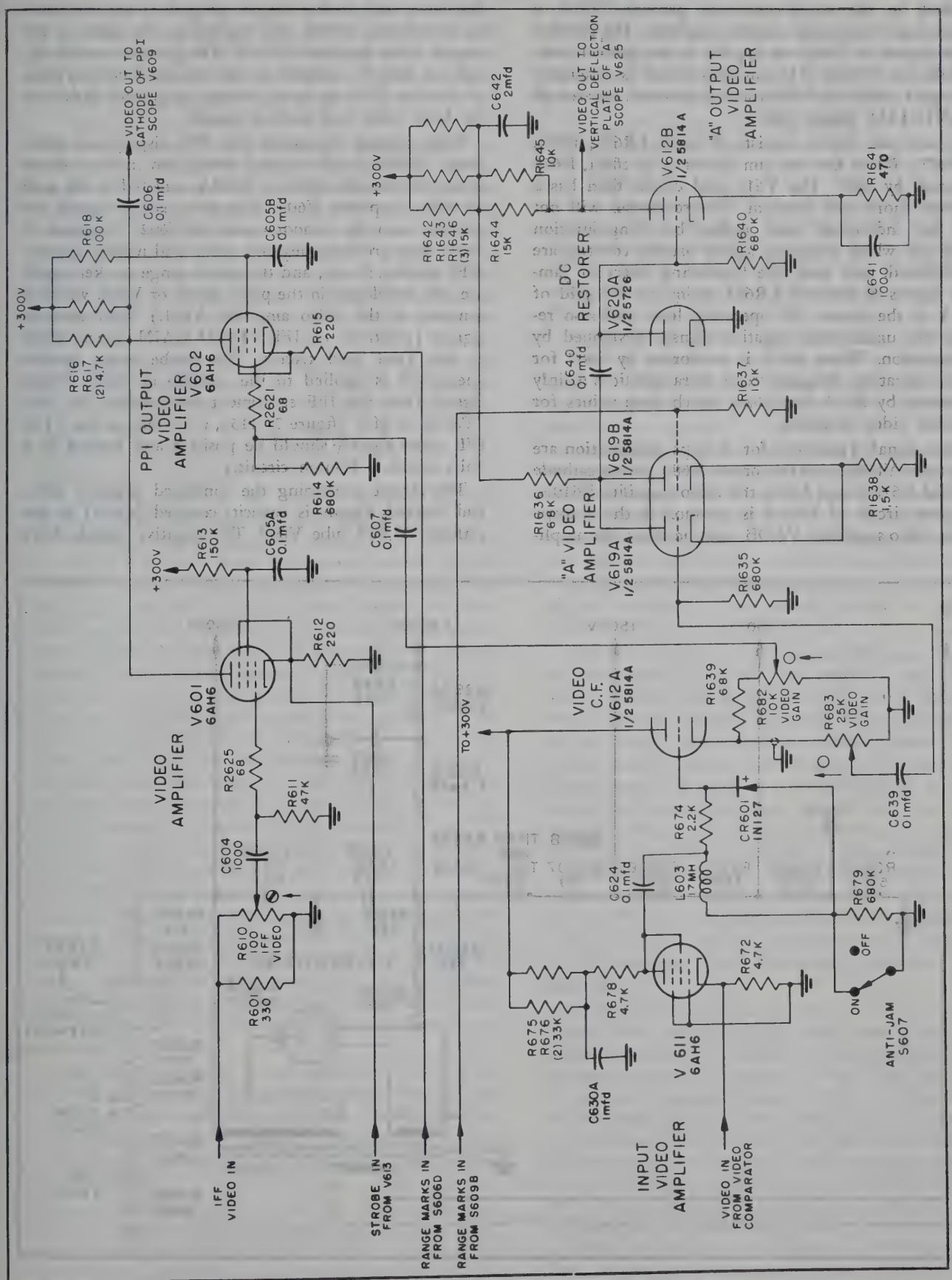

Figure 2–34. Indicator Video Amplifiers

amplified by the triode-connected pentode, V611, a grounded-grid resistance-coupled amplifier. The positive output signals of V611 are applied to the grid of cathode follower V612A. The anti-jam circuit is connected in the grid circuit of V612A and is switched on and off by ANTI-JAM switch S607.

The anti-jam circuit consists of L603, CR601, R674, and R679. When the anti-jam circuit is in effect, R679 is shorted by S607. The V612 grid circuit then has a relatively short time constant. Differentiation will not occur for individual radar pulses, but long-duration signals (of which jamming signals usually consist) are differentiated, and thus, the blanketing effect of jamming signals is reduced. CR601 maintains the grid of V612A at the proper d-c operating level and also removes the undesirable negative signals developed by differentiation. When R679 is unshorted by S607 for normal operation, the grid circuit characteristic is mainly determined by R679 and C624, which have values for a normal video amplifier.

Video signals (positive) for A-scope presentation are taken from VIDEO GAIN control R683, in the cathode circuit of V612A, and fed to the video amplifier V619A. The plate circuit of V619A is common to the A-scope marker video amplifier, V619B, and therefore, the amplified video and marker signals (negative) are combined on a common circuit and applied to the grid of the output video amplifier V612B. The positive output signals are then d-c coupled to one vertical deflection plate of A-scope V625 so as to produce an upward deflection for both video and marker signals.

Video signals (positive) for PPI display are taken from VIDEO GAIN control R682, also in the cathode circuit of cathode follower V612A, and fed to the grid of video amplifier V602. Negative marker signals are also fed into the cathode circuit of V602. The plate of V602 then produces negative video and marker signals. (IFF signals, if any, and the strobe range marker signal are also developed in the plate circuit of V602, which is common to the video amplifier V601.) V601 receives signals (positive) via IFF VIDEO GAIN control R610 in the V601 grid circuit. The strobe range marker (negative) is applied to the cathode of V601. Video signals from the IFF equipment enter Radio Set AN/TPS-1G at J417 (figure 7—115), a 75-ohm circuit. (The IFF video signals should be positive and limited to 5 volts across a 75-ohm circuit.)

The circuit containing the combined negative video and marked signals is capacity-coupled (C606) to the cathode of PPI tube V609. The negative signals drive

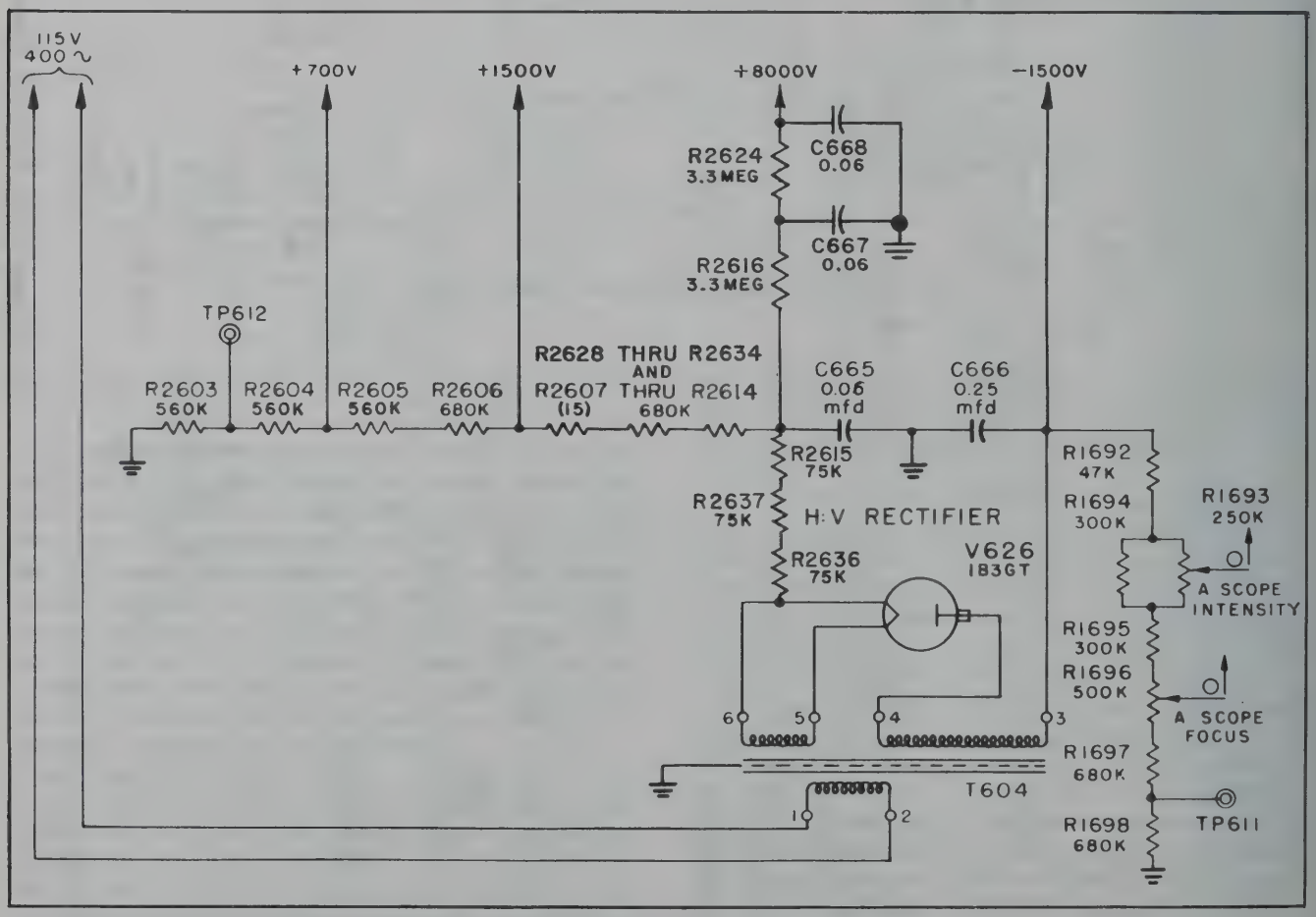

Figure 2—35. Indicator High-Voltage Supply

the V609 cathode less positive with respect to the grid to produce illumination on the PPI screen. Because of coupling capacitor C606, the video circuit is d-c restored by V607B at the cathode of V609.

f. MISCELLANEOUS CIRCUITS.
(See figures 2–35 and 7–112.)

The high-voltage power supply for both the PPI and A scopes is obtained from the circuit of V626. A conventional half-wave rectifier circuit is used with RC filtering to provide +8000, +1500, +750 and −1500 vdc. The voltage divider circuit is so connected that the ground point is 1500 volts above the most negative point of the circuit. The cathode of the A-scope is operated at this potential below ground. This permits the deflection circuits to be d-c coupled to the deflection plates of A-scope V625 at +300 volts.

The filament supply for all tubes except high-voltage rectifier V626 is obtained from T605. The scope tubes, V609 and V625, each receive filament voltage from separate windings of T605, the cathode of V609 being operated at +300 volts and the cathode of V625 being operated at −1500 volts.

Focusing current for PPI scope V609 is controlled by V610. FOCUS control R671 adjusts the cathode bias of V610 and hence adjusts the current through V610 and focus coil L602. Also, the constant-current characteristic of V610 provides focus current regulation. The focus coil L602 has not only a normal winding to effect focusing, but also two separate windings which are at right angles to each other. By adjusting the current through these coils by means of R662 and R665, the beam can be electrically centered on the V609 screen. Voltage is also developed in the plate circuit of V610 across the parallel resistors, R662-R663, in series with R664 and R665. The arrangement of the resistors is such that R662 and R665 (the PPI CENTER controls) can pass current through the centering coils of L602 in either direction to produce proper centering of the PPI display. A slight interaction exists between the fields of the L602 windings, which is easily compensated for by the adjustment procedure.

Blower B601 provides cooling when the internal temperature of the indicator exceeds 25°C (77°F), thermostat S610 providing the necessary control. When the internal temperature drops below 0°C (32°F), heater HR601 is energized by thermostat S611. Both thermostats operate over a 15°C range between their closing and opening points.

Most circuits carrying power (both ac and dc) to the unit are provided with noise filters. These filters prevent conducted noise from being carried into external circuits.

The deflection coil is rotated by the 24-speed synchro motor B602. The theory of operation is given under paragraph 10.

Located on the front panel of the indicator unit are the MTI AMPLITUDE BALANCE, MTI TIME BALANCE, and RECEIVER GAIN controls. These controls are switched into their respective circuits through the contacts of relay K3301 when the OPERATION SELECTOR on the signal comparator is set to the REMOTE position. (At the same time, the same controls in the comparator are disconnected.) Also on the front panel are the MTI RANGE GATE control (see paragraph 4.*i.*) and the ANTENNA ROTATE control.

7. POWER SUPPLY PP-674A/TPS-1D.
(See figure 7–115.)

a. GENERAL.

This unit contains power supplies for developing d-c circuit voltages up to +450 volts as well as a control chassis containing the power circuit relays, interconnecting terminals for the entire AN/TPS-1G system, and system fuses. Line voltage, line frequency, and elapsed time meters are also included.

b. POWER SUPPLY CIRCUITS. *(See figure 2–36.)*

The four power supplies contained in this unit produce the following d-c voltages:−150, +27, +150, +300, and +450. All except the +27- and +450-volt supplies are regulated.

The supplies are all conventional, full-wave rectification and single-section LC filters being used throughout. Parallel-connected rectifier and regulator tubes are used where necessary to meet the current requirements.

Filament voltages for all rectifier, regulator, and control tubes of the power supply are supplied by T401. T402 provides three stepped-up a-c voltages for developing all but the +27-volt output, which is developed from step-down transformer T403.

The two −150-volt supplies are obtained from the rectifier circuit of V406. One supply is regulated by V411 and the other is regulated by V412, these tubes being 150-volt gaseous regulators. R402 and R451 are the associated series-dropping resistors respectively.

The jumper across R403 is removed whenever the power supply is used in an AN/TPS-1D system in which the receiver-transmitter unit does not contain the 8000-ohm local-oscillator cathode-decoupling resistor R521. The 150-volt gaseous regulator V413 and its series-dropping resistors, R454–R457, utilize voltage from the V406 supply to provide a fixed reference voltage (−150) for the regulated +300-volt supply.

The +27-volt supply is obtained from T403 and dry-disk rectifier CR401. Filtering is provided by L403 and C403.

The +150-volt regulated supply includes a transformer T402, rectifiers V401–V403, control tube V410, and series regulators V407–V409. Smoothing is accomplished by the single-section filter, L404 and C405. Fixed d-c reference voltage (−150) for control tube V410 is obtained from V413. Regulation reference voltage is taken from both the input and output circuits of the regulators, V407–V409. Output regulation reference is applied to the grid of V410 through R414, R415, and R416. Input reference voltage is taken from the output of the filter, L404 and C405, and applied to the screen of V410 through the voltage divider, R452 and R453. Thus, regulation is obtained for both input and output voltage variations. R416, by adjusting the bias to V410,

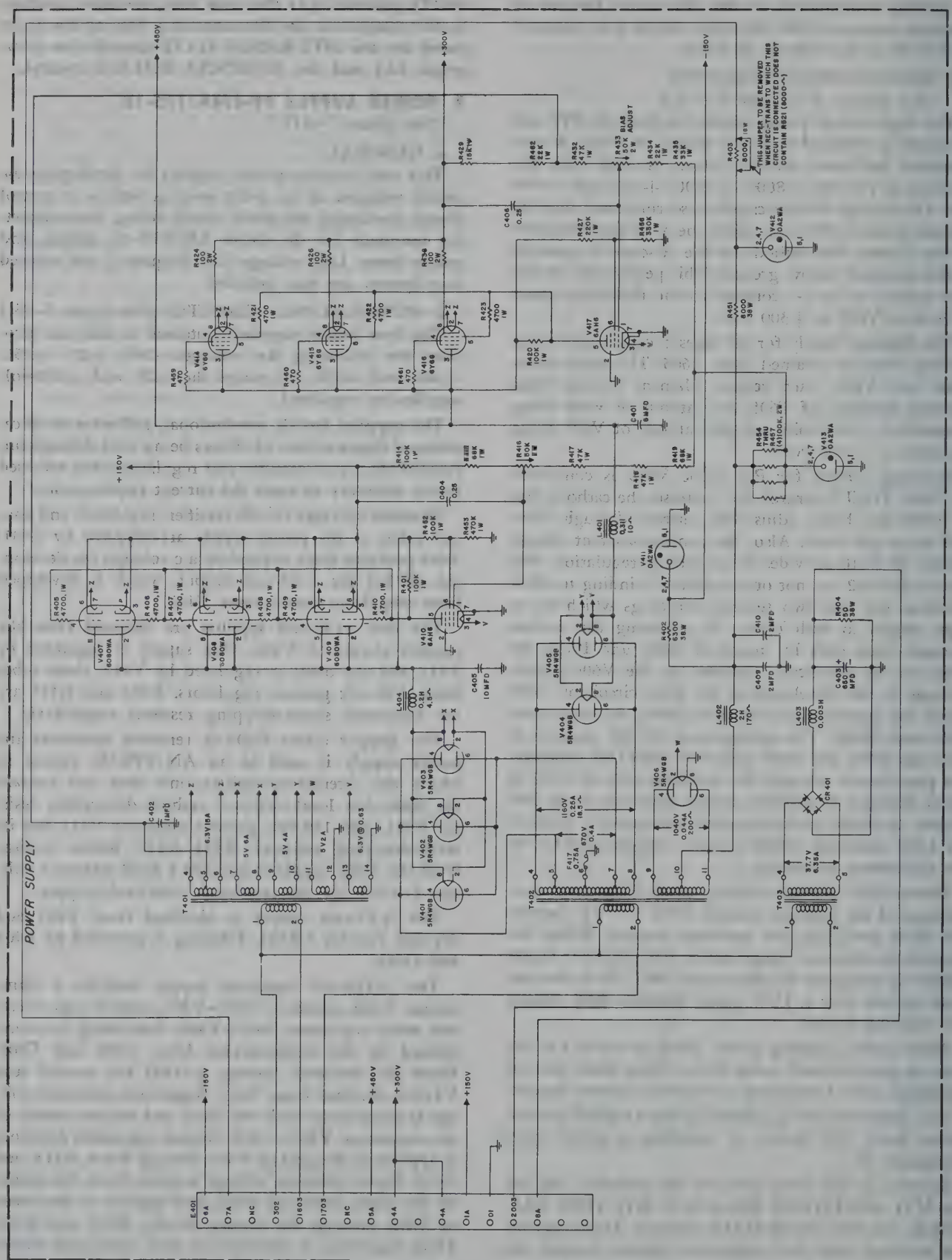

Figure 2–36. Power Supply Main Chassis

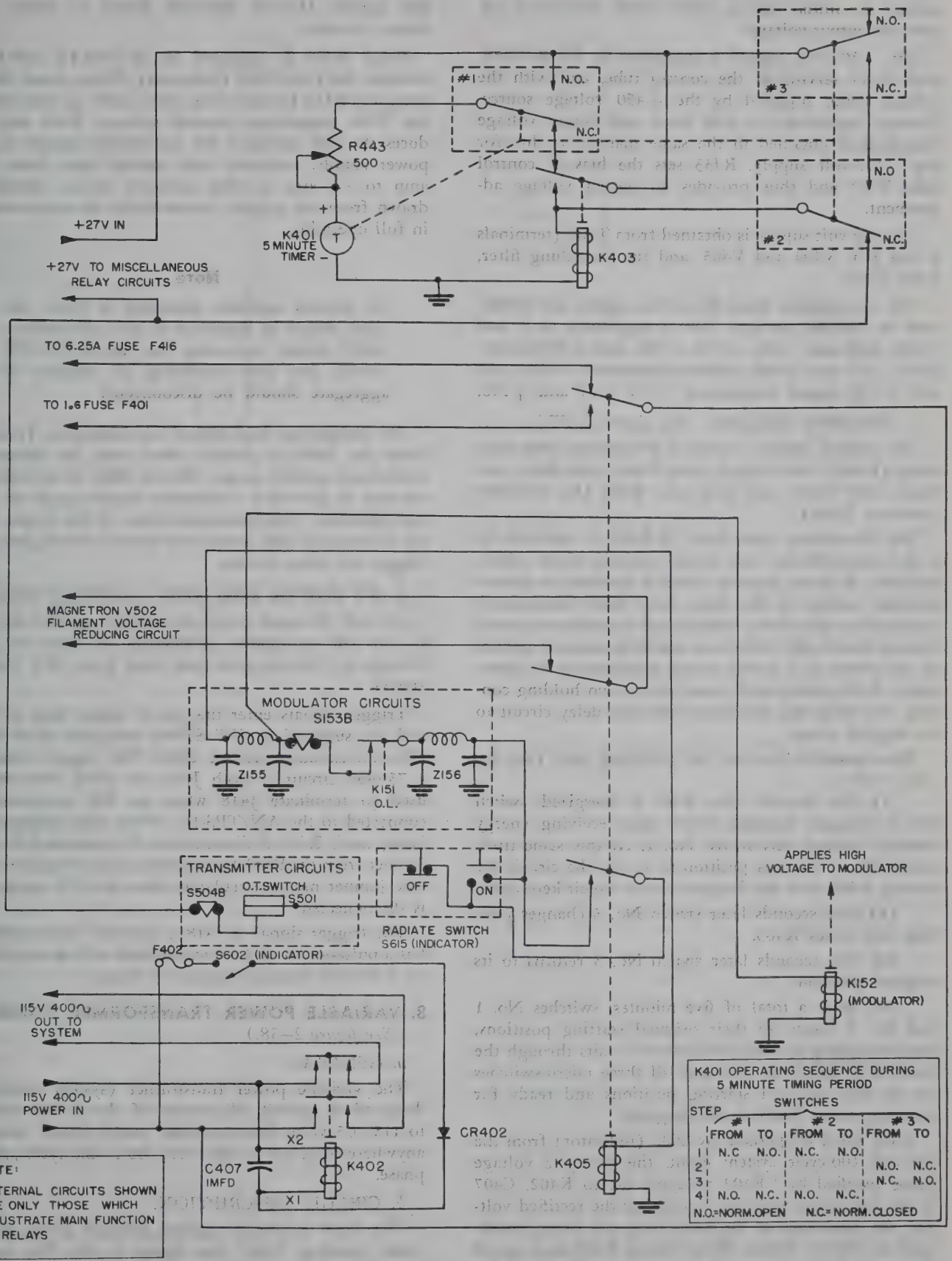

Figure 2–37. Power Supply Control Chassis

adjusts the initial bias to V407—V409, and hence, adjusts the output voltage.

The +300-volt supply is regulated by V414—V416, with V417 serving as the control tube, and with the voltage being supplied by the +450 voltage source. Voltage regulation for both input and output voltage variations is obtained in the same manner as that for the +150-volt supply. R433 sets the bias of control tube V417 and thus provides an output voltage adjustment.

The 450-volt supply is obtained from T402 (terminals 4 and 8), V404 and V405, and the smoothing filter, L401—C401.

The d-c voltages from the power supply are distributed as follows: antenna (servo amplifier), +27 and +150; indicator −150, +150, +300, and +450; modulator, +27 and +300; receiver-transmitter, −150, +27 and +150; signal comparator, −150, +27 and +150.

c. CONTROL CHASSIS. *(See figure 2—37.)*

The control chassis contains a five-minute time-delay relay (K401), main supply relay K402, time-delay contactor relay K403, and hold relay K405 (for radiation contactor K152).

The five-minute time delay of K401 is obtained by a d-c motor-driven cam which operates three micro-switches. A series rheostat R443 is included to permit accurate setting of the delay time. K401 operates in conjunction with K403, which holds the delayed control circuits closed after K401 runs out its five-minute period. In the event of a power failure (momentary or otherwise), K403, being held closed by its own holding contact, will drop out and return the time-delay circuit to its original status.

This operation involves the following steps (see figure 2—37):

(1) Five seconds after K401 is energized, switch No. 1 changes position, K401 then receiving energy directly through this switch No. 1. At this same time, switch No. 2 changes position to set up the circuit for closing K403 with the delayed control circuit kept open.

(2) Five seconds later switch No. 3 changes position and closes K403.

(3) Ten seconds later switch No. 3 returns to its original position.

(4) After a total of five minutes, switches No. 1 and No. 2 return to their original starting positions, thus energizing the delayed control circuits through the contacts of K403. At this time all three micro-switches are in their original starting positions and ready for retiming when K403 is de-energized.

Relay K402 is operated by S602 (indicator) from the 115-volt 400-cycle system input, the 400-cycle voltage being rectified by CR402 to apply d-c to K402. C407 is shunted across K402 to smooth out the rectified voltage, the reluctance of the K402 relay coil being insufficient to prevent chatter. When closed, K402 turns on all filaments of the system and the power supplies, with the exception of the modulator high-voltage supply. K402 also applies 115-volt 400-cycle power to heater and blower circuits.

Relay K405 is operated by RADIATE ON-OFF switches S615 and S616 (indicator). When closed, K405 energizes K152 (modulator), locks itself up, and lowers the V502 magnetron filament voltage. K405 also reduces the fuse rating of the convenience outlets in the power supply, indicator, and antenna base from 6.25 amp to 1.6 amp so that excessive power cannot be drawn from the primary source while the equipment is in full operation.

Note

To prevent needless replacing of fuses, the loads should be examined at each convenience outlet before operating the RADIATE-ON switch. Any load exceeding 1.6 amperes in aggregate should be disconnected.

All system fuses have blown-fuse indicators. Time-lag fuses are used in circuits which may be subject to momentary current surges. Blower B401 is included in the unit to provide a continuous circulation of air during operation. The interconnections of the power supply include not only power and control circuits, but also trigger and video circuits.

d. IFF POWER AND SYNC CONNECTIONS.

115-volt 400-cycle power is available at J411 for use by the IFF equipment. Connection is made to J411 through a 2-circuit cable and plug (type AN 3106A-20-6S).

Trigger signals enter the power supply unit at J416 and are supplied to IFF SYNC connector J418 via a 300-ohm isolating resistor R449. The trigger circuit is a 75-ohm circuit at both J416 and J418, R447 being used to terminate J418 when no IFF equipment is connected to the AN/TPS-1G. When IFF equipment is being used, R447 is disconnected by removing the IFF jumper from the R447 terminal board (see figure 3—21). The jumper must be replaced when the IFF equipment is disconnected.

The trigger signal at J418 is positive, and nominally has a pulse-width of 2.0 microseconds with an amplitude of +40 volts (measured across 75 ohms).

8. VARIABLE POWER TRANSFORMER TF-238/U. *(See figure 2—38.)*

a. GENERAL.

The variable power transformer (system variac) is designed to permit adjustment of the system voltage to 115 ±5 volts, from an input power source variation anywhere from 100 to 130 volts, 380 to 420 cycles, single phase.

b. CIRCUIT DESCRIPTION.

The input power is applied through J2405 to the variac winding T2401 (see figure 2—38). The arm is brought out through the side of the case to a knob calibrated from 0 to 100. T2402 is a "buck-boost" trans-

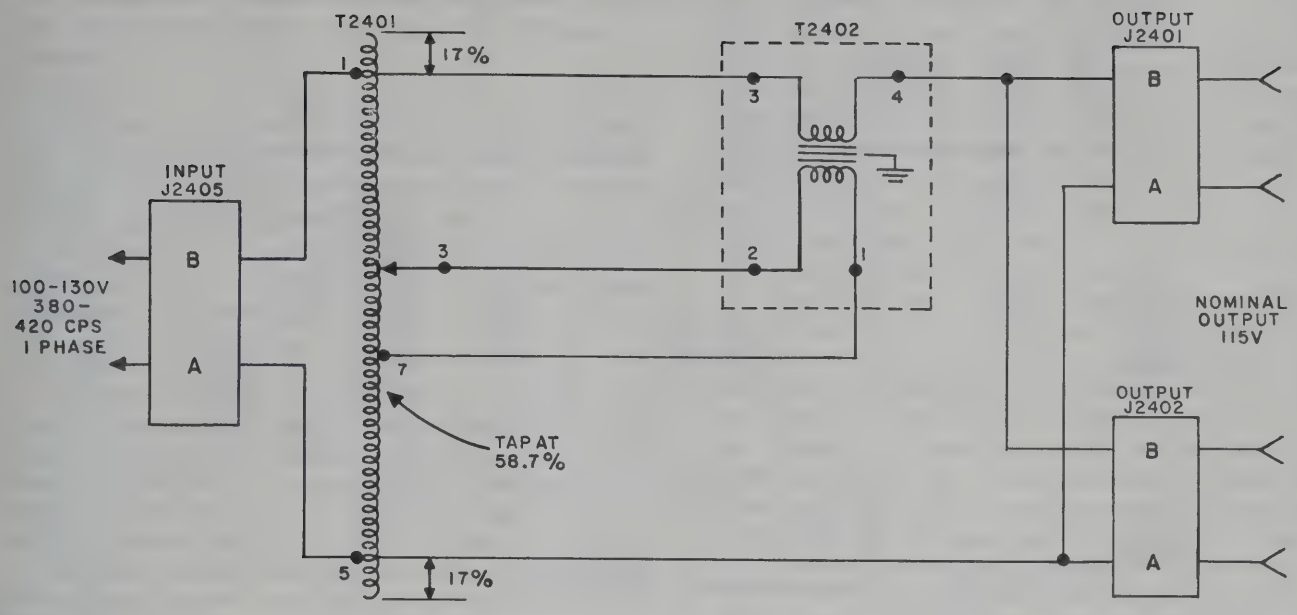

Figure 2–38. Variable Power Transformer Schematic

former. When the arm is between taps 1 and 7, the voltage across terminals 1 and 2 of T2402 is of the same polarity as the applied voltage. However, the voltage induced across terminals 3 and 4 is of opposite polarity, hence a bucking action is obtained. Conversely, when the arm is moved down between taps 7 and 5, a boost action is obtained. The amount of buck or boost depends on the position of the arm with respect to tap 7, which determines the amplitude and phase of the voltage applied to T2402.

Since the total current drawn from the power source passes through winding 3-4 of T2402 there is an additional voltage drop which bucks the applied voltage at all times. During extreme conditions of light or heavy loads, this voltage drop will vary from a very small value to a fairly high one. To enable T2402 to function under these extreme conditions, the variac winding is extended past terminals 1 and 5. When the arm is at either extreme of the winding, the autotransformer-step-up action provides an increased voltage which is applied to winding 1-2. The action can be seen more clearly by following the operation through each of the extreme conditions.

With low input (100 volts) and a light load, the drop across winding 3-4 is small and the arm need only be set for enough boost voltage to bring the output up to 115 volts. With low input and a heavy load, however, there is a large drop across 3-4, and a large voltage must be applied to winding 1-2 to overcome this drop and add to the low input at the same time. For this condition, the arm must be set past tap 5.

With high input (130 volts) and a light load, there is a small drop across winding 3-4 and the arm must be set past tap 1, as a very large bucking voltage is required to lower the output voltage. When the input is high and the load very heavy, there is a large drop across 3-4 and the arm must only be set for a small additional bucking voltage.

In practice, the arm is set for a reading of 115 volts on the power supply front panel voltmeter.

9. ANTENNA BASE AB-498/TPS-1G.

(See figure 7–118.)

a. GENERAL.

The antenna base unit contains (1) the antenna-drive assembly, which rotates the antenna; (2) the servo amplifier, which controls the speed and direction of rotation and provides overload protection; and (3) the RF input connections to the antenna unit for both radar and IFF. The RF connections are described in paragraph 11, below.

b. ANTENNA DRIVE ASSEMBLY. *(See figures 7–90 and 7–110.)*

The antenna drive assembly consists of a d-c drive-motor which drives a spindle through a system of straight-spur gears. The spindle in turn supports and drives the antenna. The motor/antenna speed reduction provided by the gear system is 117-1/3:1.

D-c current for the shunt field is supplied by CR701 in the servo-amplifier. D-c power to the armature is supplied by controlled-thyratron rectifiers, V701 and V702. Relay K703, in parallel with the output of CR701, is de-energized in the event of loss of output from CR701, and opens the primary of T704 which supplies plate voltage to the thyratrons. Thus, armature current is cut off in the event of field-excitation failure.

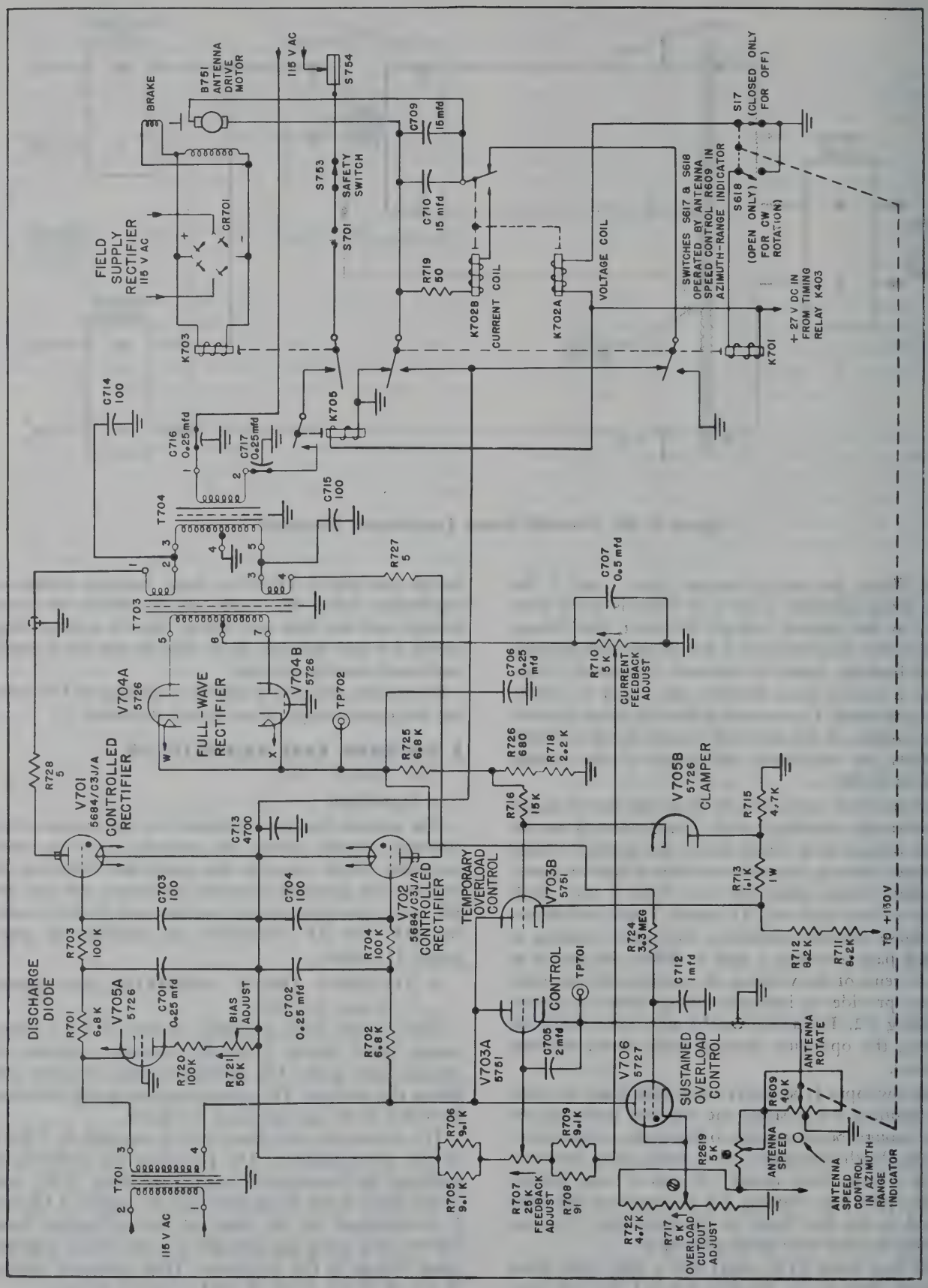

Figure 2–39. Servo Amplifier Chassis

The drive-motor contains a solenoid-actuated brake. The solenoid is in parallel with the field winding and thus actuates the brake whenever field excitation is removed.

Two synchro transmitters are also driven by the drive-motor through the gear system. B752, a 24-speed synchro, supplies azimuth information to B602 in the indicator. B753, a single-speed synchro, supplies azimuth information to the repeater PPI (if used).

The antenna is capable of being rotated in either direction at any speed betwen 0 and 15 rpm, both functions being controlled by the servo amplifier.

c. SERVO AMPLIFIER. *(See figure 2—39.)*

The servo amplifier assembly derives d-c power from the 115-volt 400-cycle supply for operating the shunt-wound antenna drive motor. Field excitation, which is fixed, is obtained from a dry-disk rectifier. Armature voltage is supplied by two grid-controlled thyratron rectifiers whose output is governed by a servo-type control circuit in order to regulate the motor speed. Relays control starting and reversing, while tubes associated with the control circuit afford overload protection.

The main components of the circuits consist of field supply rectifier CR701, bridge input transformer T701, control transformer T703, plate supply transformer T704, filament transformer T702, thyratron rectifiers V701 and V702, control tube V703A, current-limiting tubes V703B and V706, full-wave rectifier V704A/B, discharge diode V705A, and d-c clamper V705B.

In operation, the amount of voltage applied to the armature of the antenna drive motor is determined by the d-c component (bias) of the 400-cycle signal applied to the grids of the thyratrons, V701 and V702. If the bias is made sufficiently high, V701 and V702 will not conduct during any part of the a-c cycle, and no armature voltage will be developed. As the bias is made more positive, V701 and V702 conduct for a small portion of each a-c half-cycle; and as the bias is made still more positive, V701 and V702 eventually conduct over a major portion of each half-cycle.

The V701 and V702 a-c grid signal and the d-c component are obtained from the secondary of T701, the value of the d-c component being controlled by V703A. V703A is part of the bridge circuit consisting of R705 through R710, diode V705A, R720, and R721.

Initial bias to V703A is set by ANTENNA ROTATE control R609 (indicator), which adjust the amount of positive voltage at the cathode of V703A. When the antenna is rotating, the grid of V703A also receives bias voltage from the bridge resistors, R705—R709, and the potentiometer, R710. The bias voltage developed by these resistors is controlled by output voltage and by output current which develops d-c voltage across R710.

Voltage is developed from output current in the following manner:

The two primaries of T703 are current windings and develop voltage in the secondary of T703, this voltage being directly proportional to the plate currents of V701 and V702. This voltage is full-wave rectified by V704A/B, a negative voltage being developed across R710 and a positive voltage being developed across R718, R725, and R726. C707 provides filtering for the rectified voltage developed across R710, while C706 filters the rectified voltage developed across R718, R725, and R726.

The grid control signal for V701 and V702 is developed as follows:

A simplified version of the V701 and V702 grid circuit is shown in figure 2—40. The x in the cathode of V703A indicates the point at which ANTENNA ROTATE control R609 applies bias for antenna speed control. When the antenna is at rest, the cathode of V703A can be considered to be connected directly to point C, as shown. Also, with no antenna rotation, the grid and cathode of V703A are at the same potential (zero bias). R703—C703 and R704—C704 are filters which absorb the thyratron grid kick-back voltages, and are of values which do not affect the grid control signal.

First consider the circuit of figure 2—40 with V703A and V705A removed. The circuit then becomes a simple series circuit consisting of the secondary of T701, R701, C701, R702, and C702. The voltages appearing across C701 and C702, which are the grid signal voltages of V701 and V702, are each 400-cycle sine waves of equal amplitude and, when viewed from the common point C, are 180° apart in phase (one grid is positive while the other is negative). The phase of these voltages is displaced approximately 80° from that of the secondary of T701, the displacement being determined by the ratio of R701 and R702 resistance to C701 and C702 reactance.

Now if V703A and V705A are inserted in the circuit and the currents through V703A and V705 are made equal, the voltages across C701 and C702 are unchanged. This is because the tubes appear as shunt resistance across the T701 secondary (on the conducting half-cycles); and as the tube currents are equal, the voltage relationship of point C to both sides of the circuit is unchanged.

However, with the antenna at rest, the circuit constants are such that the effective conduction resistance through V703A to point C is approximately one third of the effective conduction resistance from point C through V705A. Therefore, on successive positive cycles a positive charge accumulates on the common side of C701 and C702. This occurs because there is less effective resistance from point C to the positive side of the circuit than from point C to the negative side of the circuit during conducting half-cycles.

The positive charge on the common side of C701 and C702 builds up to a static point where the a-c voltage appearing across C701 and C702 does not reach zero. As the common point of C701 and C702 has a positive sign, the axis of the a-c voltage across C701 and C702 is negative in relation to point C.

Actually, when the positive charge at point C reaches

its maximum value, V705A conducts only for a short interval to make up for the decay in the positive charge. This decay is controlled by V705A, the rate being determined mainly by R720 and R721. In a sense, V703A and V705A could be called charging and discharging diodes respectively.

The adjustment of R721, not only by setting the discharge rate but also by reducing the ratio of two effective resistances, adjusts the value of the positive charge and hence sets the negative bias (a-c axis) of the V701 and V702 grid signals. In operation, R721 is adjusted so that the a-c grid signals are at the threshold of producing V701 and V702 conduction when ANTENNA ROTATE control R609 is set at zero (as indicated on ANTENNA SPEED indicator).

When the ANTENNA ROTATE control is turned from zero, V703A receives an increment of negative bias, and hence the negative d-c bias developed across C701 and C702 is reduced. The most positive portion of the a-c component at the grids of V701 and V702 causes the thyratrons to fire on alternate halves of the cycle. As the a-c voltage at the grids is lagging the 400-cycle voltage by approximately 80° at the plates (V701 and V702), the thyratrons fire at the decaying portion of their respective positive half-cycles. An increment of positive output voltage is developed, this voltage being indicative of the bias of V703A. As the bias of V703 is made more negative, V701 and V702 conduct over a longer period of each half-cycle, thus producing more output voltage.

As soon as any output voltage is developed by V701 and V702, current flows through the bridge resistors, R705 through R710. The voltage appearing at the arm of the potentiometer, R707, is applied as bias to the V703A grid. This bias voltage is representative of a balance between output voltage and output current.

Assuming that R707 and R710 are properly adjusted, the output voltage and current each stabilize at some value, and the antenna rotates at a speed commensurate with these values.

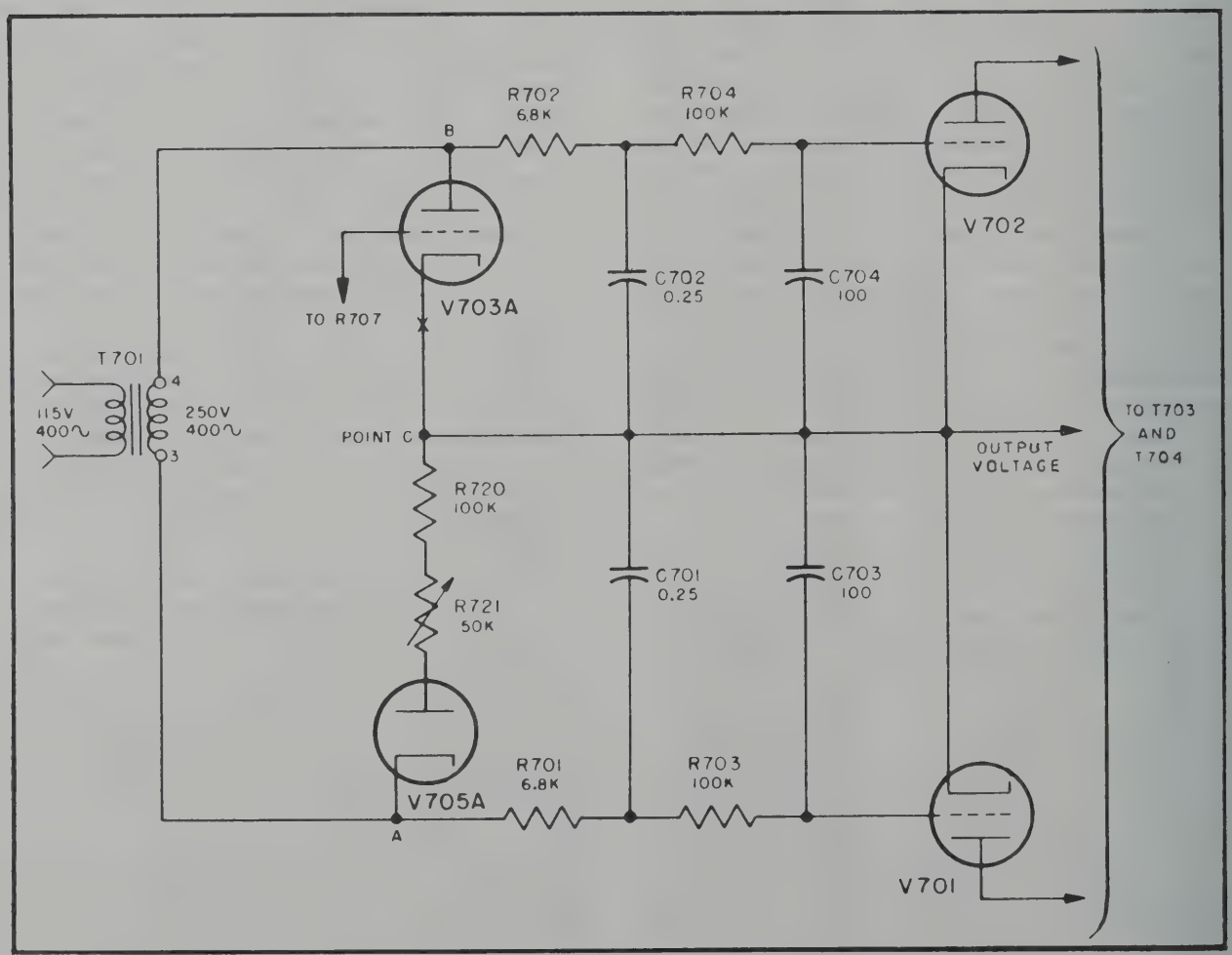

Figure 2—40. Servo Amplifier Thyratron Grid Circuit

When the antenna rotates in quiet air, little or no change of loading is impressed on the antenna to change its speed. However, when winds are present, the load changes during each rotation cycle, and a tendency exists for the antenna to slow down and speed up. When the antenna tends to slow down, the loading is heavier and, consequently, the antenna drive motor current increases. The increase of current develops a more negative voltage across R710, which makes the grid bias of V703A more negative, and hence, the output voltage increases to maintain the speed of the antenna with the added load. Again, as the grid of V703A is in the bridge circuit, the circuit balances for the new loading.

Conversely, when the antenna is in a position where wind is aiding rotation, the output voltage drops proportionately to maintain rotation speed. The sensitivity of the system is such that the rotation speed of the antenna is maintained within 1/2 rpm, at all speeds, with wind velocities up to 50 knots.

Adjustment R710 balances the bridge as to output voltage vs. voltage developed by output current. R707, by adjusting the proportion of corrective bias applied to V703A, adjusts the degree of correction. If R707 is set too far in the positive direction, overcorrection results and the antenna oscillates. If it is set too far negative, undercorrection results and antenna speed varies with wind load variations.

To limit the antenna drive motor armature current, the limiting circuits of V703B and V705B, and V706 are used. The circuit of V703B and V705B limits temporary overload currents, while the circuit of V706 limits sustained overload currents.

Tube V703B is biased beyond cutoff for peak voltage of the 400-cycle a-c at its plate. The cathode and grid of V703B are 31.3 volts and 25.2 volts positive respectively in relation to ground. The grid of V703B then is 6.1 volts negative with respect to its cathode. When the antenna is not rotating, no voltage is developed at the cathode of V704A/B.

When the antenna is rotating, the load current passing through T703 develops a positive d-c voltage across R725, R726, and R718 by means of full-wave rectifier V704A/B. As this voltage increases, the grid of V703B is made less negative and V703B conducts when the effective bias is above cutoff.

When V703B conducts, it reduces the output voltage in the same manner as does V703A. Thus, if the output current of V701 and V702 exceeds a predetermined value, V703B limits the current to this value. Actually the values of R718, R725, and R726 are chosen so as to limit the output current to a range of 4.5 to 10 amperes. As the time constant of R718, R725, R726, C706, and the grid circuit of V703B is short, the limiting circuit responds quickly to overload currents. V705B isolates the initial bias from the control voltage developed across R725, R726, and R718.

Tube V706 limits the drive motor armature current in the same manner as does V703B. The grid of V706 receives control information from the same source as that of V703B. Also, the plates of both tubes are connected to the same point on the bridge circuit.

Tube V706 is a gas tetrode and, therefore, goes into full conduction when the initial cutoff bias is overcome. The initial bias is developed in the cathode circuit of V706 by the voltage divider consisting of R722, R717, and R723 connected between the +150-volt supply and ground. By the adjustment of R717 the effective bias can be adjusted between 75 and 112.5 volts.

The shunt capacitor C712 and series resistor R724 in the grid circuit of V706 effectively delay the control information approximately 5 seconds so that V706 will not be triggered by temporary overloads. If an overload is sustained for more than 5 seconds, the control voltage developed across C712 will have risen sufficiently to overcome the initial bias and cause V706 to conduct. When V706 conducts, it reduces the output voltage to the drive motor to a safe value. V706, also being effectively connected across V703A, controls V701 and V702 bias, and output voltage in the same manner as that of V703A. The bias of V706 is initially adjusted so that V706 will trip for sustained armature currents of 3 amperes or greater. Once V706 is tripped, conduction continues until ANTENNA ROTATE control R609 is reset to zero.

Reversal of antenna rotation is accomplished by K701, which is operated by S618 and S619, associated with the mid-position of ANTENNA ROTATE control. K701 reverses the output connections to the antenna drive motor armature. Filter capacitors C709 and C710 are shunted across the output circuit to reduce the 400-cycle ripple voltage.

The single-pole double-throw contacts of relay K702A/B operate to brake the antenna drive motor. The voltage relay coil K702A is energized when ANTENNA ROTATE control R609 is in its mid-position. This opens the circuit to the antenna drive motor armature and also connects the relay current coil of K702B in series with R719 across the drive motor armature. When R609 is turned in either direction, K702A is de-energized, the drive motor armature circuit is closed, and K702B and R719 are disconnected. The antenna then immediately rotates according to the setting of R609, speed being indicated by the ANTENNA SPEED indicator.

If R609 is turned from one direction of rotation to the other while the antenna is rotating, K702A is energized momentarily as R609 passes the zero position, and thus K702B and R719 are connected across the drive motor armature. The back EMF of the drive motor holds the output circuit open through the closed relay contacts and the current coil of K702B, with series resistor R719 providing current limiting. The loading of K702B and R719 also provides braking of the antenna drive motor.

As the antenna approaches a standstill and the back EMF decays to nearly zero, K702B releases its contacts, thus allowing the antenna to be rotated in the opposite direction. This arrangement reduces the occurrence of

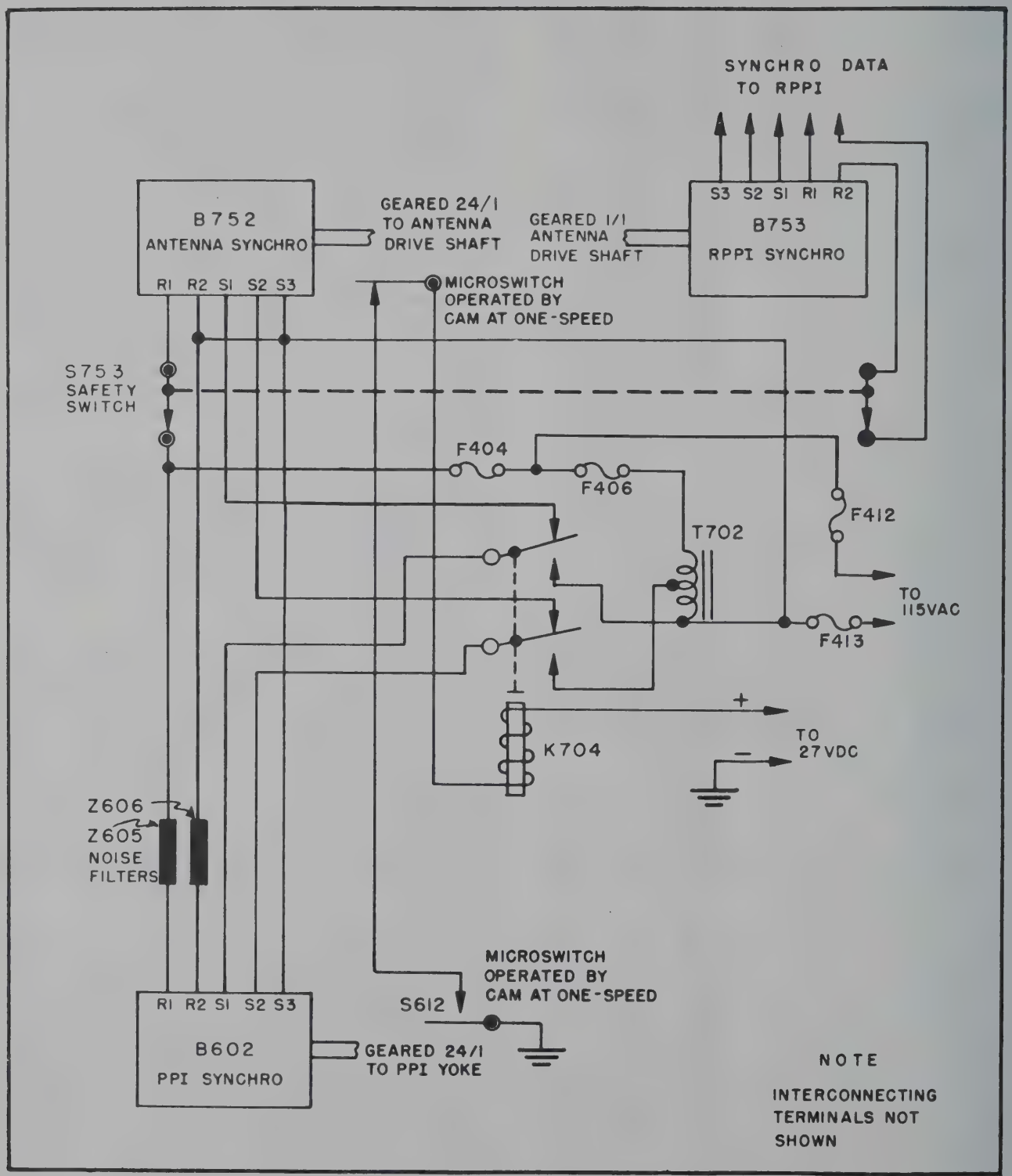

Figure 2—41. Synchro Circuits

high twisting moments in the antenna drive mechanism as well as in the tower structure.

The dry-disk rectifier CR701 delivers approximately 95 volts d-c to the field of antenna drive motor B751. This voltage also is applied to the voltage-sensitive relay K703, which drops out at approximately 70 volts. The contacts of K703 supply voltage to T704 through the contacts of K705, which is energized from the delayed control circuit. Thus, armature voltage cannot be developed unless the field excitation is near normal. Also, plate voltage cannot be applied to the thyratrons until after the time-delay warm-up period.

As the thyratrons, V701 and V702, are a source of high-frequency noise, several filters are used in circuits leading away from these tubes. Noise in the cathode circuit is reduced by C713, while C714 and C715 effect a reduction of noise in the plate circuits. A further reduction in noise is obtained by C716 and C717, connected in the primary circuit of the V701 and V702 plate transformer, T704.

10. ANTENNA SYNCHRO SYSTEM.

(See figure 2—41.)

A 24-speed synchro system is used to synchronize the rotation of the indicator PPI sweep coil with the antenna rotation. The transmitting or generator synchro is mounted in the antenna, and makes 24 revolutions for each antenna revolution. Likewise, the indicator follower synchro (synchro motor) which is driven directly from the output of the antenna synchro makes 24 revolutions for one revolution of the indicator PPI sweep coil. A 1-speed switch system is used to lock the indicator synchro to the correct multiple of 24. A 1-speed synchro generator also is included in the antenna to transmit azimuth information for repeater PPI use.

The synchro components consist of 24-speed synchro generator B752, 1-speed switch system S756 and relay K704, and 1-speed synchro generator B753. Reference voltage for B752 is taken from the 115-volt 400-cycle source. (B753 is a 60-cycle synchro, excitation voltage being required from the repeater PPI power source.)

In operation, S756 is closed except when in contact with its cam, which is less than 12° wide (approximately 10°). Conversely, the synchronizing switch, S612, in the indicator is open except when in contact with its cam of less than 12° width. S756 and S612 are connected in series with the coil of relay K704, thereby requiring both switches to be closed to operate K704.

If the sweep coil rotation is 1-speed-synchronized with the antenna, K704 is de-energized because, when one cam switch is closed, the other is open. However, if the sweep coil is not 1-speed-synchronized, K704 is energized. This occurs when the sweep coil is within ±6° of zero because it is within this angular displacement that S612 is closed. Also, for K704 to operate, the antenna must be in a position within ±6° of zero.

When K704 operates, the indicator synchro, B602, is disconnected from the antenna synchro, B752, and zeroing voltage from T702 is applied to the indicator synchro. This causes B602 to position the sweep coil at 0°. During the first revolution of the antenna, and when the antenna cam opens S756, K704 is de-energized, thereby removing the zeroing voltage from B602 and connecting the two synchros together. B602 then locks onto the antenna synchro information within ±6° of the zero position. One-speed and 24-speed synchronization then persists unless a power interruption or other irregularity occurs. Synchronization will be re-established when the irregularity has been cleared and/or when power is next applied.

Z605 and Z606 are in series with the 115-volt 400-cycle line, and act as noise and interference filters.

11. ANTENNA AS-673/TPS-1E.

(See figure 2—42.)

The method used to transfer the RF energy to and from the antenna and the antenna arrangement itself are similar to those used in many microwave radar systems. The antenna uses a waveguide nozzle subradiator whose energy is concentrated into a narrow beam by a lattice-metal reflector. Conversely, received signals are focused by the reflector on the subradiator. The system includes a transmission line for the connection of an IFF antenna.

For simplicity, operation of the antenna system is here described in terms of transmitted energy.

Transmitter RF power, conducted to the antenna input connector by coaxial cable RF854, is transferred to the waveguide nozzle by a rigid coaxial line system consisting of RF851, RF751, RF752, RF856, and RF754. This system consists mainly of a rigid 1-5/8-in. coaxial line section with stub-supported (metallic insulators) inner conductors and rotary coaxial joint mounted concentric with the rotation axis of the antenna.

The coaxial rotary joint, RF752, consists of two coaxial lines, one concentric with the other, the inner conductor of the outside line (radar) being the outer conductor of the inside line (IFF). The circuits of all three conductors are carried through the rotary joint by sliding contacts. Connection into the coaxial rotary joint is made through a T coaxial section. Thus, two input circuits are provided for radar (J755) and IFF (J756). The two coaxial lines come together at the junction of the T, quarter-wave stubs being used to support the inner conductor.

At the antenna end of the rotary joint, the two circuits are separated by RF856 with the same method as that used at the input. The output circuits are brought out to separate coaxial connectors.

A length of rigid coaxial line, RF754, conducts the radar energy to a fitting on the short length of waveguide which conducts the energy to the horn attached to the end of the waveguide. The two connectors of RF754 are at right angles to the line itself. Stub supports are used for insulating and positioning the center conductor.

Energy is coupled into the waveguide by a short radiator. The waveguide in turn carries energy to the horn, which radiates the energy to the reflector.

The match between the coaxial line and the waveguide is determined by the size and shape of the short

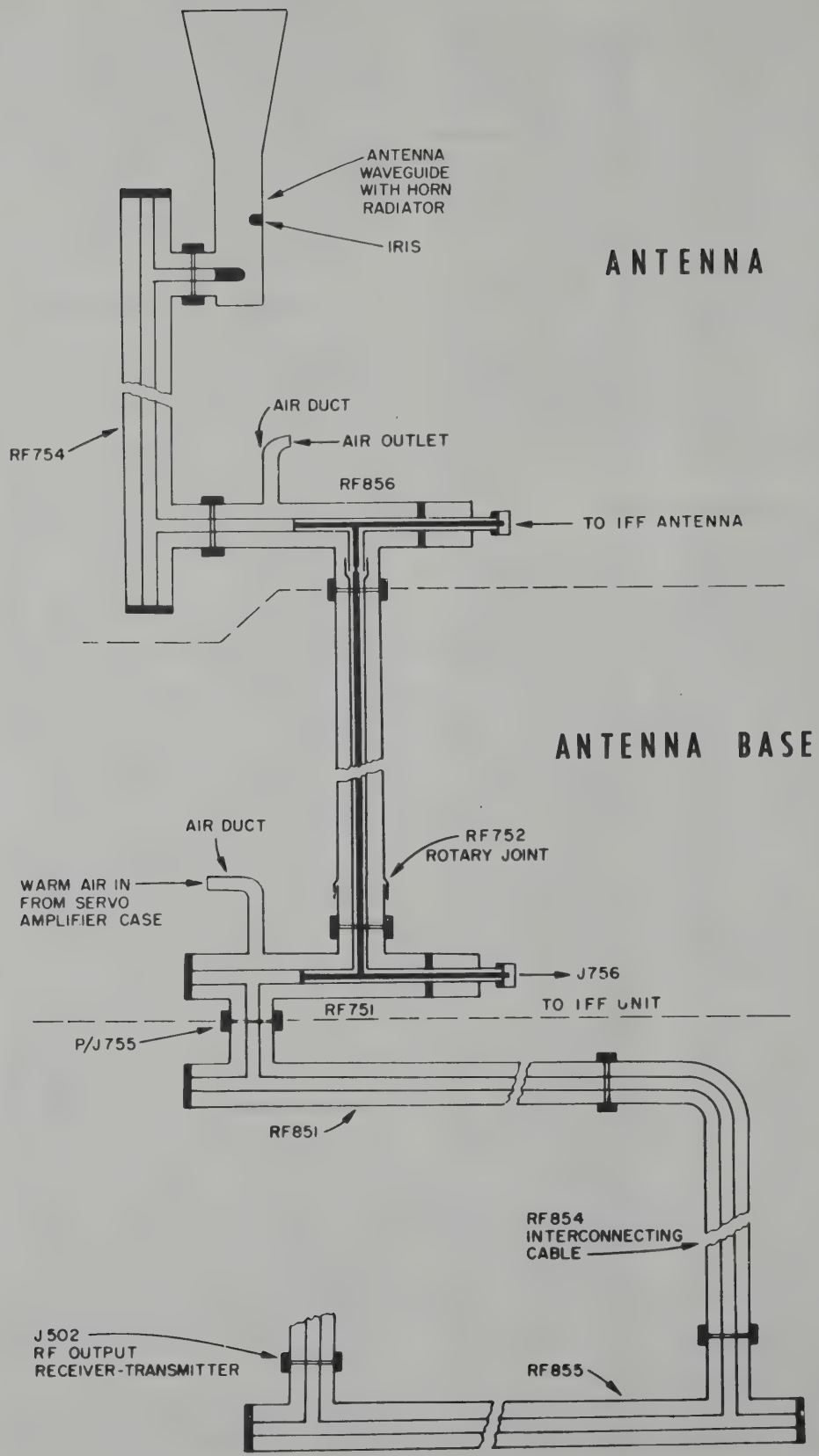

Figure 2–42. Antenna RF Feed System

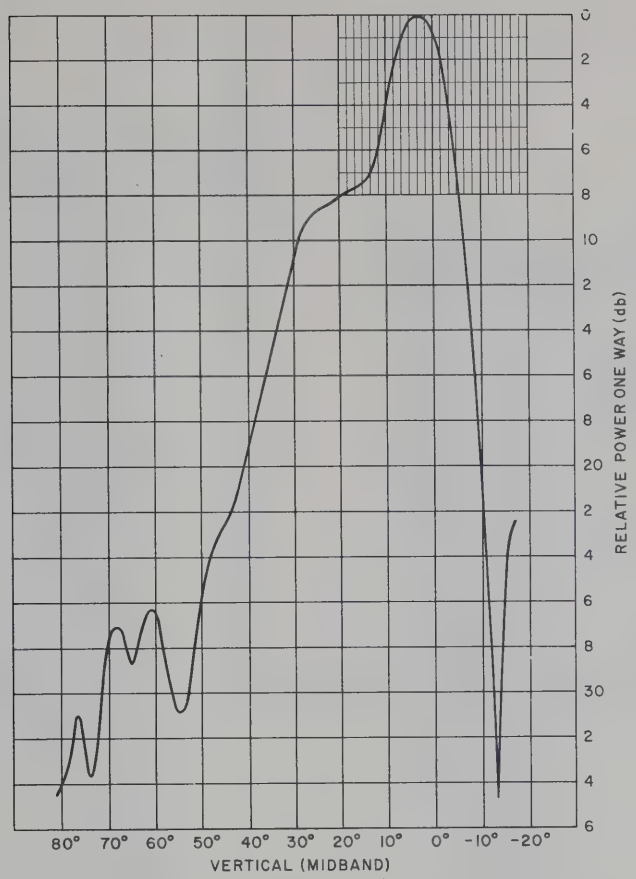

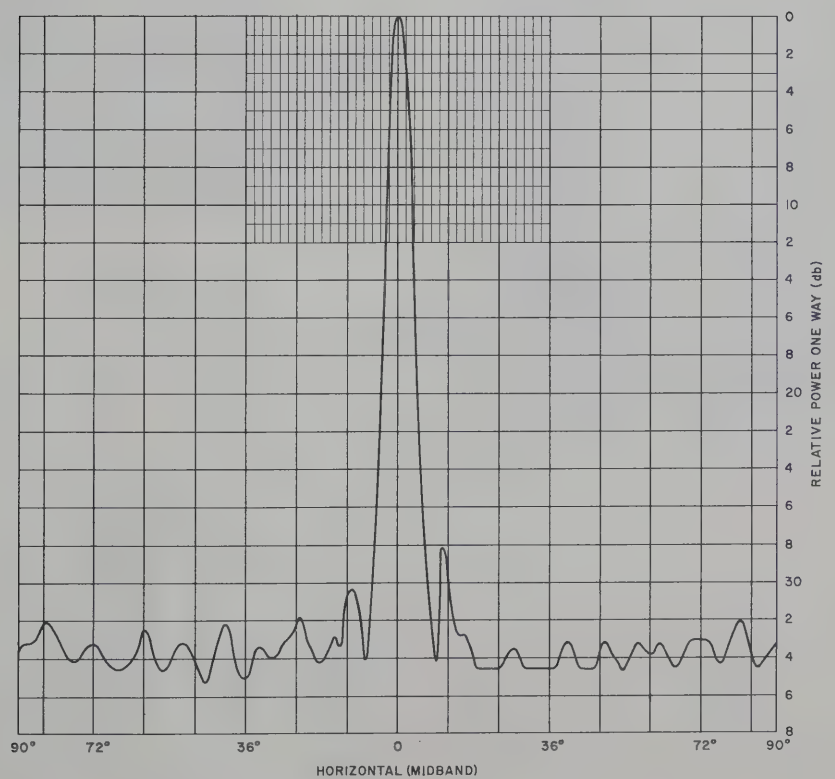

Figure 2—43. Antenna Radiation Patterns

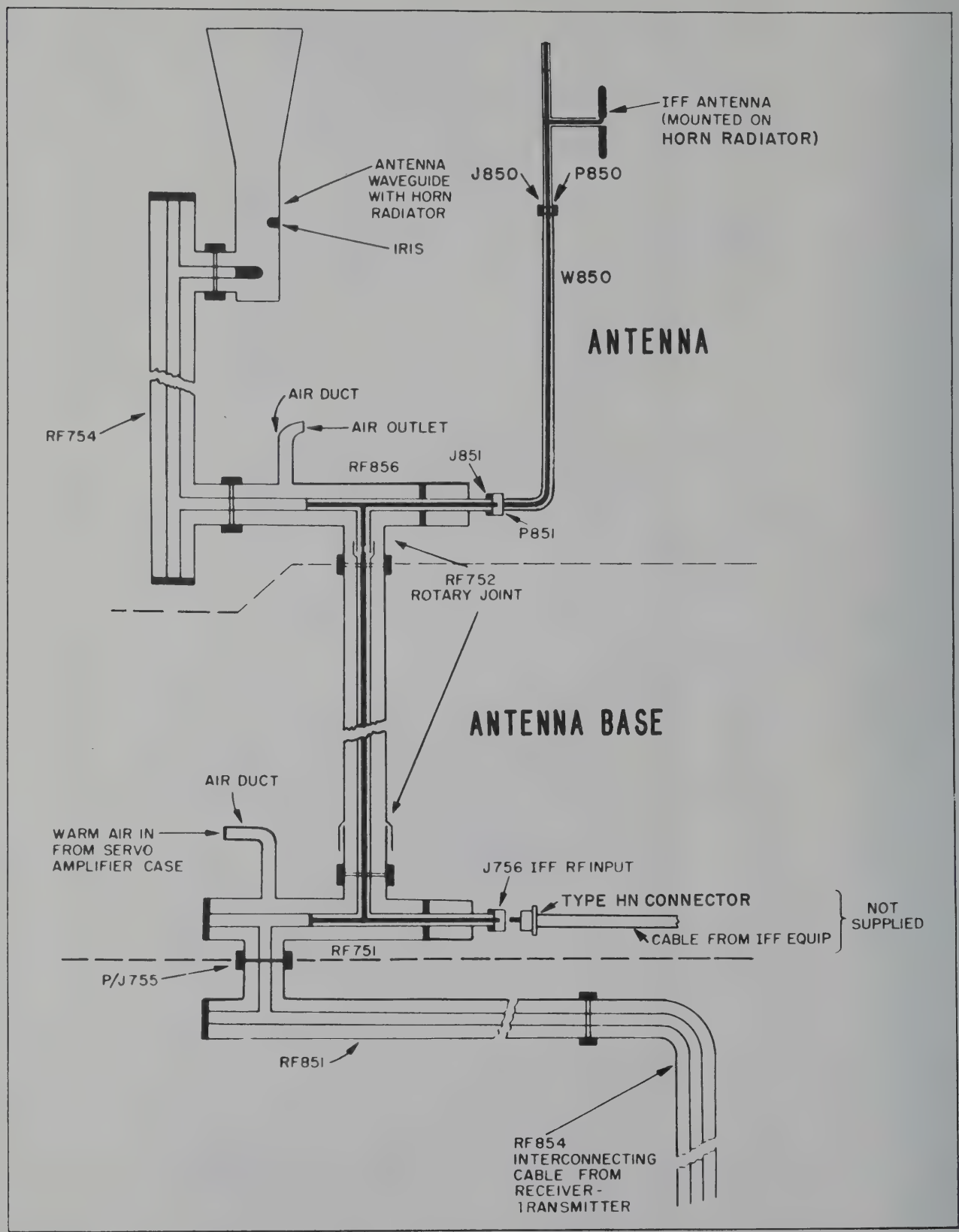

Figure 2—44. IFF Antenna System

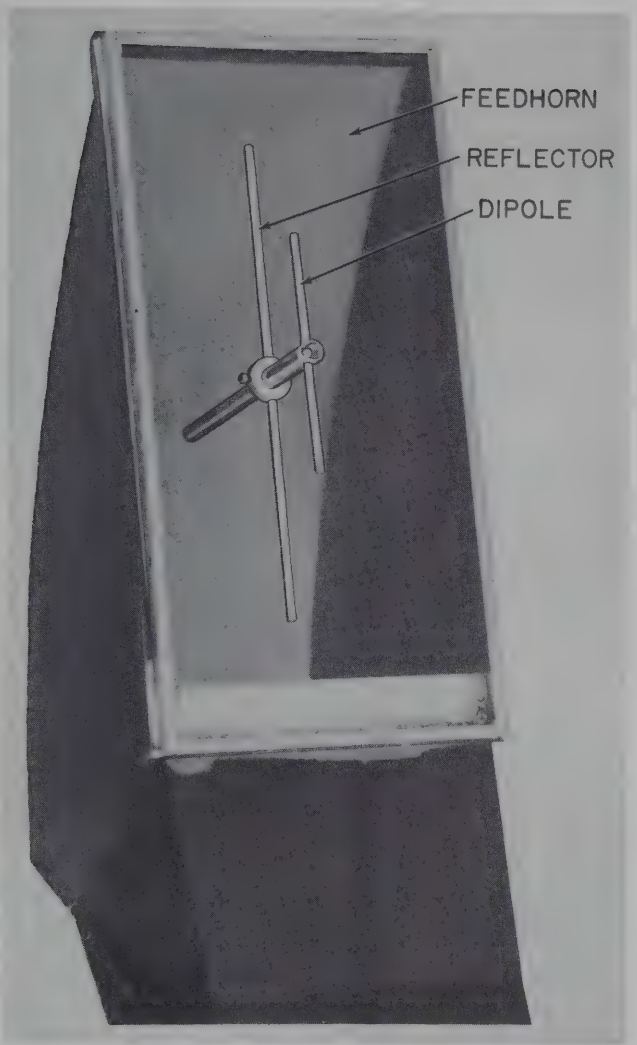

Figure 2—45. IFF Antenna Dipole and Reflector

radiator. The waveguide in turn is matched to the horn by an iris, which consists of a short metallic projection in the center of the broad side of the waveguide at the point where the horn attaches to the waveguide.

The horn is proportioned to radiate as narrow a beam as possible at the focal point of the antenna reflector. The reflector then concentrates the energy into a narrow beam, polarization being horizontal. Figure 2—43 shows the resultant patterns.

Connection between RF856 and the IFF antenna is then made by the flexible cable, W850, which connects between J851 of RF856 and J850 of the IFF antenna assembly (see figure 2—44).

From J850 at the IFF antenna, connection is made to the IFF radiator through a rigid coaxial line which supports the antenna radiator and has a stub-supported inner conductor.

Figure 2—46. IFF Antenna Reflector Arrangement

The IFF radiator consists of a half-wave dipole, which is backed up by five rods arranged to form a reflector (see figures 2—45 and 2—46). The input impedance of this antenna arrangement is 50.5 ohms, this value also being the surge impedance of the coaxial line feed system. The voltage standing-wave ratio of the complete system, measured at J756, does not exceed 2 to 1 over the operating frequency band. The voltage standing-wave ratio is shown in figure 2—47.

The reflector directs the IFF transmitted signal into the radar antenna reflector, which concentrates the IFF radiated signal into a narrow beam.

The IFF antenna is so positioned in the nozzle of the radar horn radiator that there is negligible loss and/or pattern distortion of the radar signal.

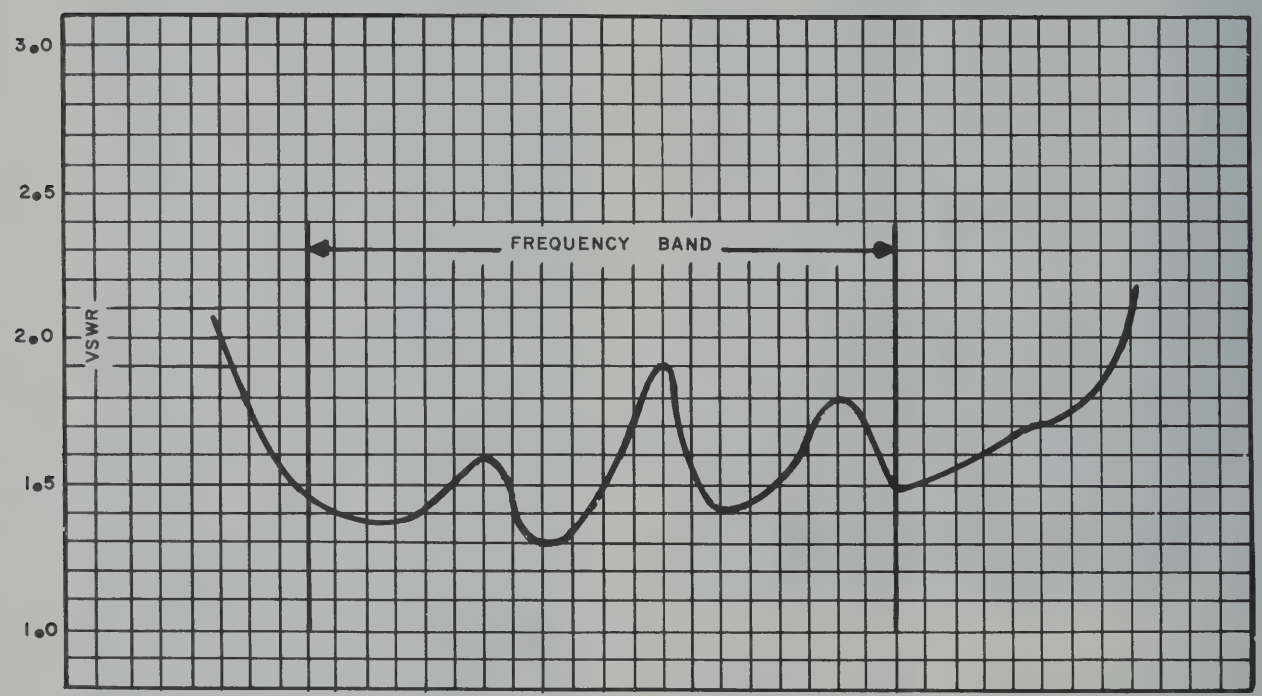

Figure 2–47. Voltage Standing-Wave Ratio Curve

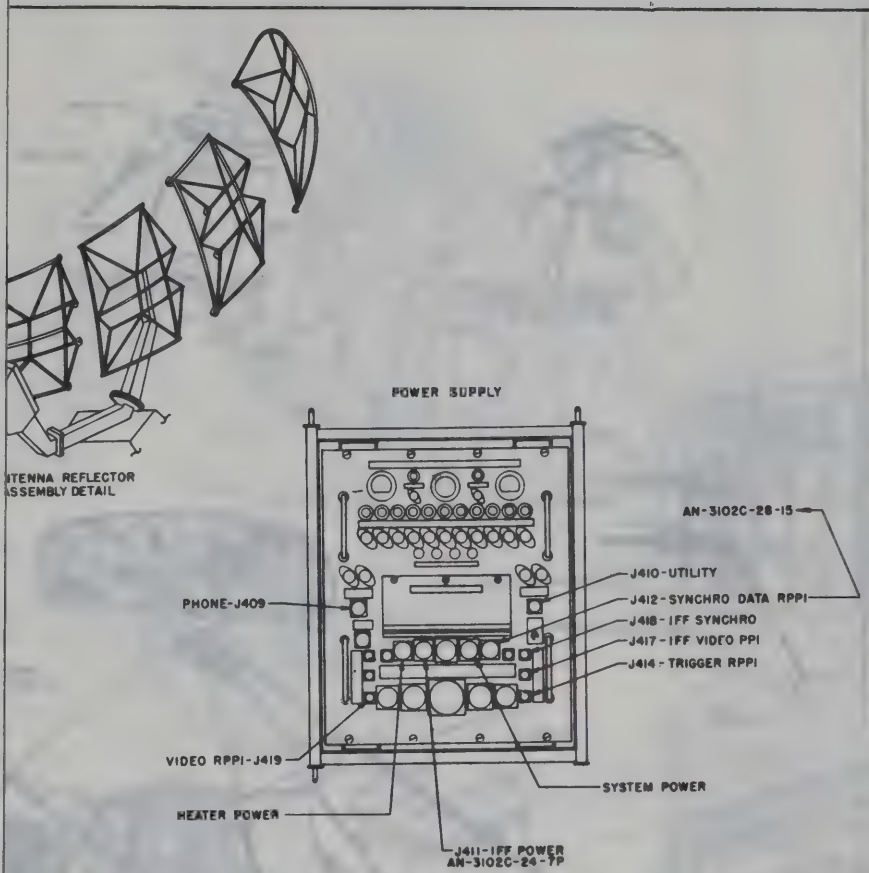
ITENNA REFLECTOR
ASSEMBLY DETAIL
POWER SUPPLY
AN-3102C-28-15
J410-UTILITY
J412-SYNCHRO DATA RPPI
J418-IFF SYNCHRO
J417-IFF VIDEO PPI
J414-TRIGGER RPPI
PHONE-J409
VIDEO RPPI-J419
HEATER POWER
SYSTEM POWER
J411-IFF POWER
AN-3102C-24-7P

The reflector directs the IFF transmitted signal into the radar antenna reflector, which concentrates the IFF radiated signal into a narrow beam.

The IFF antenna is so positioned in the nozzle of the radar horn radiator that there is negligible loss and/or pattern distortion of the radar signal.

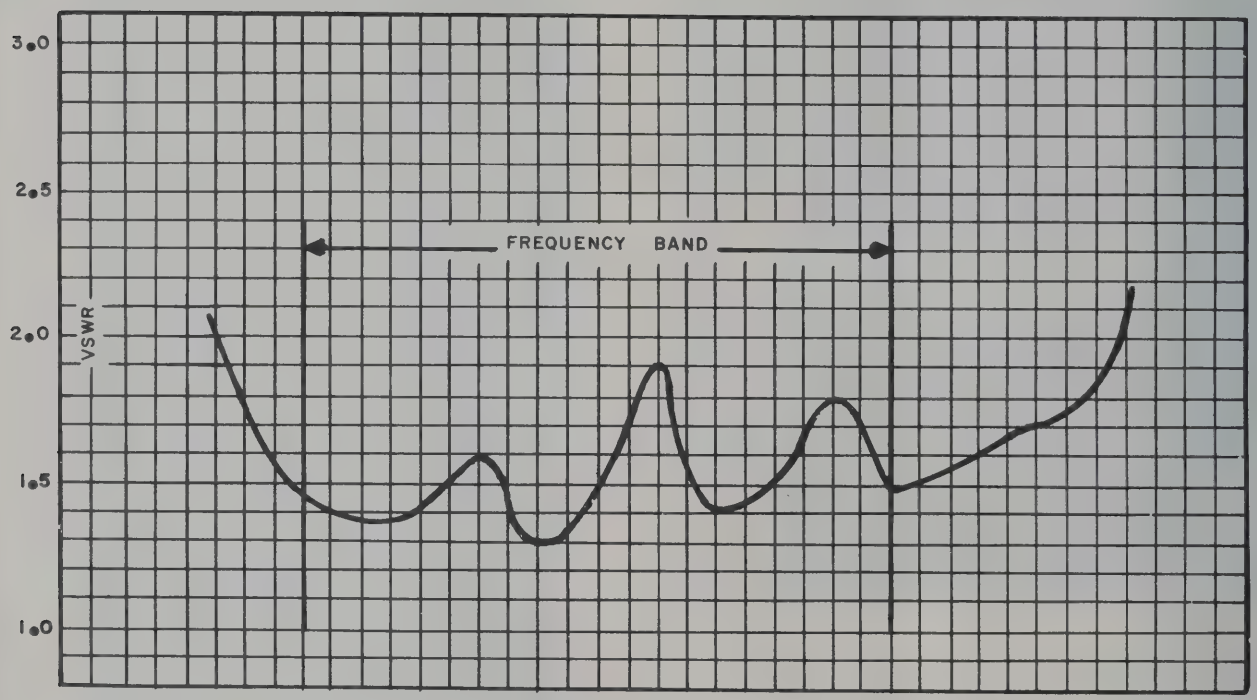

Figure 2–47. Voltage Standing-Wave Ratio Curve

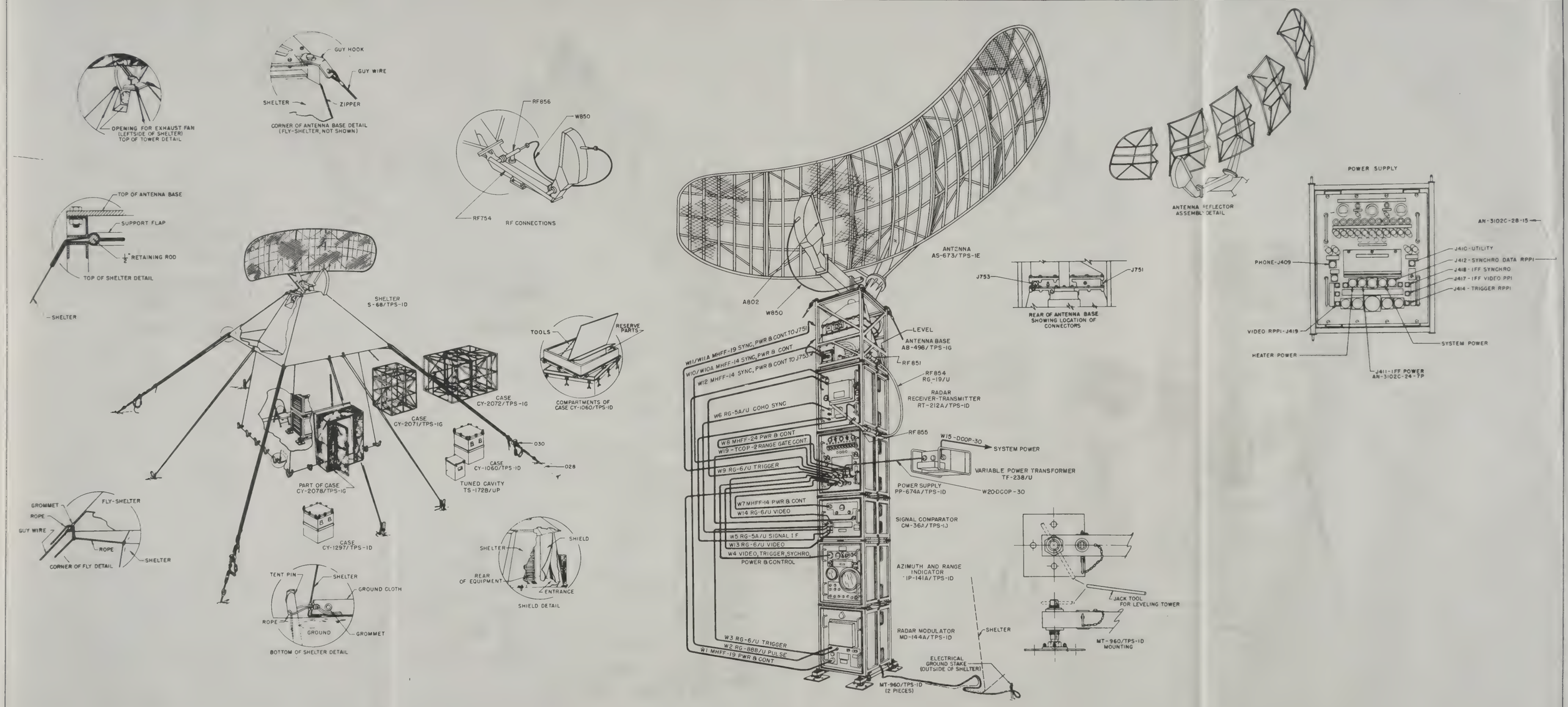

Figure 3–1. Equipment Assembly Details

SECTION 3
INSTALLATION

1. UNPACKING.

Table 1—3 lists the contents of each packing box. When unpacking, it will be found easier to remove the box cover and sides before attempting to free the contents.

The following precautions should be observed when unpacking:

a. Use a nail-puller whenever possible.

b. If a lever is used, make certain all pressure points are on the box.

c. Use no more impact (such as hammer blows) than is absolutely necessary.

When the equipment is first unpacked, it should be set up as soon as possible and checked out as outlined in paragraph 6 in this section. This is preferably done where power and bench facilities are readily available. By so doing, any irregularities resulting from improper handling in shipping can be cleared up where facilities are available to effect proper repair.

The IFF antenna, being part of Antenna AS-673/TPS-1G requires separate unpacking. Case CY-2072/TPS-1G contains the radar antenna center section in which the IFF antenna is installed. Interconnecting cable W850 (IFF antenna to antenna base) is packed in Case CY-1060/TPS-1D, together with the system interconnecting cables.

2. FIELD INSTALLATION.

a. SELECTION OF OPERATING SITE.

An ideal operating site is one which provides maximum range-detection capabilities in all directions with a minimum of ground clutter (fixed targets) and ghost images.

For any particular area, careful consideration is necessary to locate a site that affords optimum results. It may be found that the site chosen does not provide satisfactory detection capabilities and/or that large areas of ground clutter have sufficient amplitude to interfere with the tracking of moving targets. In this event, the radar should be moved to a new location determined by an elevation of results obtained at the initial site. The problem of selecting a suitable radar site is somewhat analogous to that of selecting a radio transmitter site, which usually requires considerable investigation.

In the information that follows, known factors that control selection of a radar site are given. These data should help in locating an initial site that gives near-optimum results for any given area.

In order to detect aircraft, particularly low-flying aircraft, at as great a range as possible, the line-of-sight path from the radar to all points on the horizon should be level or slanting slightly downward. This indicates that, in general, the radar site should be located at an elevated position. In a good many cases it may be impossible or impractical to locate the radar where there are no terrain projections above the level of the radar. The shielding effect of such terrain reduces the detection capabilities, especially for low-flying aircraft. If this situation exists in an area over which surveillance is required, locate the radar as near as possible to a position where such obstructions are at directions in which a loss of detection capabilities can be tolerated. Remember that the higher and closer a hill or mountain is to the radar, the more extensive will be the loss of radar coverage.

Although clutter signals can be eliminated or substantially reduced on the radar screens by the MTI system, fixed targets that produce high-amplitude reflections tend to obscure moving targets. This means that tracking of moving targets may be difficult in areas which produce large masses of high-amplitude clutter signals. Thickly populated areas and mountainous country usually produce clutter signals of this nature. If the area of heavy clutter is one over which surveillance is not required, then the radar site can be chosen entirely on a basis of obtaining optimum range.

If the operation is such that little or no ground clutter interference can be tolerated, two expedients can be used. First, locate the radar as far as possible from mountainous country and thickly populated areas which are likely to produce large masses of clutter signals. In most cases clutter reflections do not cause serious tracking difficulties when the radar is 30 miles or more from thickly populated areas. Depending on the height and character of mountain ranges, it may be necessary to locate the radar 50 miles or more from such terrain. In some regions mountains at a range of 90 miles have produced large masses of high-amplitude fixed-target signals.

A second expedient that has been used to effectively minimize ground clutter is terrain shielding. This consists of locating the radar behind low nearby hills so that the clutter area is shielded from the radar beam. It is not always necessary to obtain complete shielding. If the shielding is sufficient to permit only scattered prominent objects to be seen with normal radar presentation, satisfactory MTI operation is generally obtained. Care must be taken to choose a site not too close (usually not less than 1/4 mile) to a height of ground that has

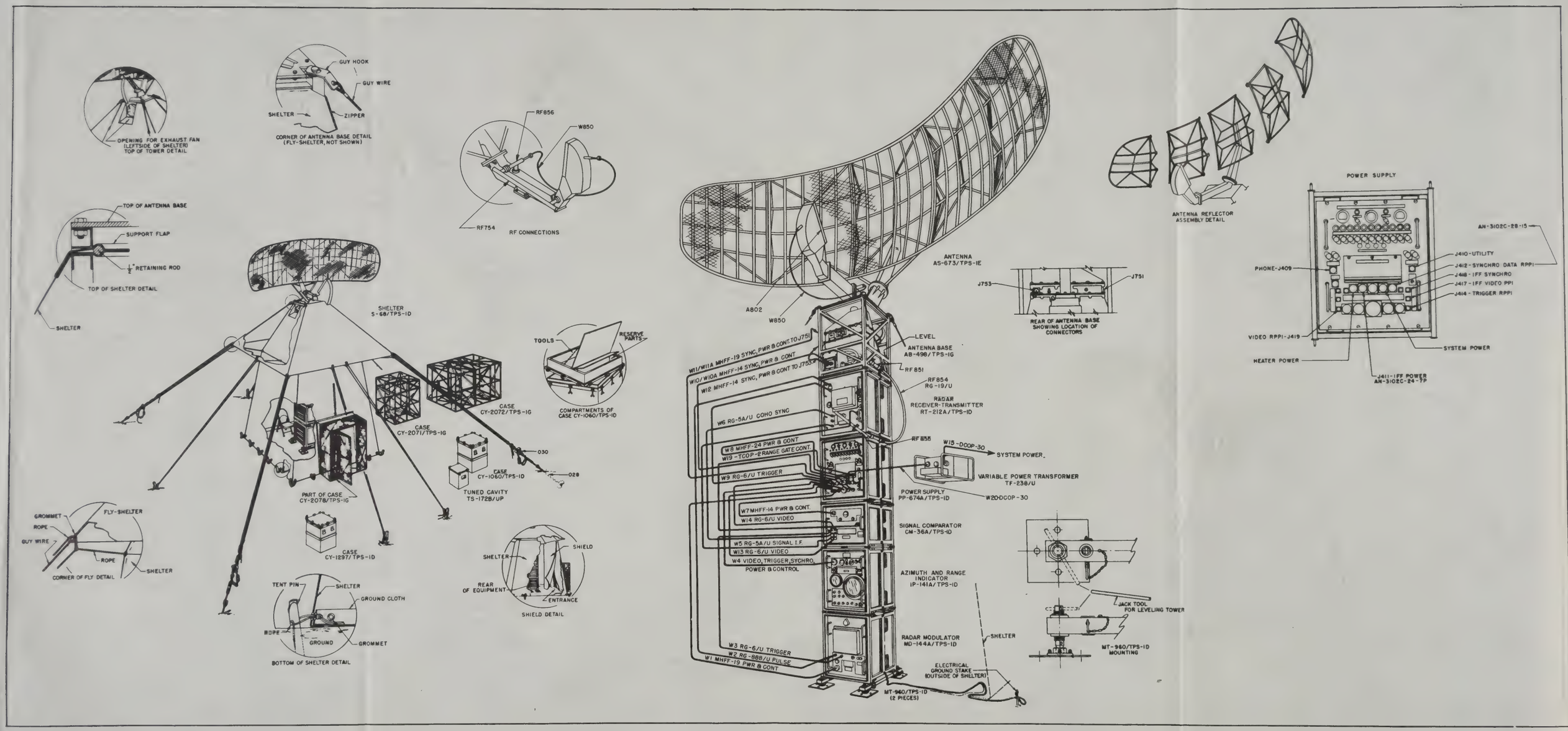

Figure 3–1. Equipment Assembly Details

SECTION 3
INSTALLATION

1. UNPACKING.

Table 1–3 lists the contents of each packing box. When unpacking, it will be found easier to remove the box cover and sides before attempting to free the contents.

The following precautions should be observed when unpacking:

a. Use a nail-puller whenever possible.

b. If a lever is used, make certain all pressure points are on the box.

c. Use no more impact (such as hammer blows) than is absolutely necessary.

When the equipment is first unpacked, it should be set up as soon as possible and checked out as outlined in paragraph 6 in this section. This is preferably done where power and bench facilities are readily available. By so doing, any irregularities resulting from improper handling in shipping can be cleared up where facilities are available to effect proper repair.

The IFF antenna, being part of Antenna AS-673/TPS-1G requires separate unpacking. Case CY-2072/TPS-1G contains the radar antenna center section in which the IFF antenna is installed. Interconnecting cable W850 (IFF antenna to antenna base) is packed in Case CY-1060/TPS-1D, together with the system interconnecting cables.

2. FIELD INSTALLATION.

a. SELECTION OF OPERATING SITE.

An ideal operating site is one which provides maximum range-detection capabilities in all directions with a minimum of ground clutter (fixed targets) and ghost images.

For any particular area, careful consideration is necessary to locate a site that affords optimum results. It may be found that the site chosen does not provide satisfactory detection capabilities and/or that large areas of ground clutter have sufficient amplitude to interfere with the tracking of moving targets. In this event, the radar should be moved to a new location determined by an elevation of results obtained at the initial site. The problem of selecting a suitable radar site is somewhat analogous to that of selecting a radio transmitter site, which usually requires considerable investigation.

In the information that follows, known factors that control selection of a radar site are given. These data should help in locating an initial site that gives near-optimum results for any given area.

In order to detect aircraft, particularly low-flying aircraft, at as great a range as possible, the line-of-sight path from the radar to all points on the horizon should be level or slanting slightly downward. This indicates that, in general, the radar site should be located at an elevated position. In a good many cases it may be impossible or impractical to locate the radar where there are no terrain projections above the level of the radar. The shielding effect of such terrain reduces the detection capabilities, especially for low-flying aircraft. If this situation exists in an area over which surveillance is required, locate the radar as near as possible to a position where such obstructions are at directions in which a loss of detection capabilities can be tolerated. Remember that the higher and closer a hill or mountain is to the radar, the more extensive will be the loss of radar coverage.

Although clutter signals can be eliminated or substantially reduced on the radar screens by the MTI system, fixed targets that produce high-amplitude reflections tend to obscure moving targets. This means that tracking of moving targets may be difficult in areas which produce large masses of high-amplitude clutter signals. Thickly populated areas and mountainous country usually produce clutter signals of this nature. If the area of heavy clutter is one over which surveillance is not required, then the radar site can be chosen entirely on a basis of obtaining optimum range.

If the operation is such that little or no ground clutter interference can be tolerated, two expedients can be used. First, locate the radar as far as possible from mountainous country and thickly populated areas which are likely to produce large masses of clutter signals. In most cases clutter reflections do not cause serious tracking difficulties when the radar is 30 miles or more from thickly populated areas. Depending on the height and character of mountain ranges, it may be necessary to locate the radar 50 miles or more from such terrain. In some regions mountains at a range of 90 miles have produced large masses of high-amplitude fixed-target signals.

A second expedient that has been used to effectively minimize ground clutter is terrain shielding. This consists of locating the radar behind low nearby hills so that the clutter area is shielded from the radar beam. It is not always necessary to obtain complete shielding. If the shielding is sufficient to permit only scattered prominent objects to be seen with normal radar presentation, satisfactory MTI operation is generally obtained. Care must be taken to choose a site not too close (usually not less than 1/4 mile) to a height of ground that has

Figure 3—2. Use of Tower Assembly Tool

only sufficient height and size to place most of the clutter area in shadow. If the radar is located too close to the shielding terrain or if the shielding terrain is too high or extensive, serious loss of range may result. In any event, the use of shielding tends to reduce the range in the direction of the shielding and may completely eliminate detection of low-flying aircraft.

One more consideration in choosing an operating site concerns the conditions in the immediate vicinity of the radar. High-amplitude reflections from nearby buildings or structures can cause pulling of the magnetron frequency and hence result in improper MTI operation. Nearby buildings or structures also may cause shadows and ghost images. Here again, the more massive and the closer structures are to the radar, the more extensive will be the shadow. Although nearby objects, such as a steel mast or a radio tower, may not cast a serious shadow, such structures quite likely will produce ghost images. Ghost images, in this case, appear at the bearing of the structure and are due to targets being detected by energy reflected by the structure.

b. ERECTION OF TOWER. *(See figure 3—1.)*

The following tools will be found necessary in erecting the tower and assembling the units.

Description	*Reference Symbol*
Tool Kit etc.	H22
Wrench, strap	H23
Pliers	H25
Knife TC-29	H27
Hatchet	H26
Screwdriver 6″ long blade	H28
Iron, soldering	H29
Tip, soldering iron	H30
Wrench, spintite, 7/16″ opening	H34
Wrench, D.O.E., 1/2″ and 9/16″ opening	H40
Wrench, D.O.E., 3/4″ and 13/16″ opening	H41

The units are assembled in the following order from the mounting upwards.

Mounting MT-960/TPS-1D (2)
Radar Modulator MD-144A/TPS-1D
Azimuth and Range Indicator IP-141A/TPS-1D
Signal Comparator CM-36A/TPS-1D
Power Supply PP-674A/TPS-1D
Radar Receiver-Transmitter RT-212A/TPS-1D
Antenna Base AB-498/TPS-1G
Antenna AS-673/TPS-1E

Assembly is accomplished by mating the cornerpost pins and sockets. Captive locking pins are then inserted through the joints, thus tying the units together into a single assembly. The interlocking arrangement is such that the units (except for the antenna base and modulator) can only be assembled in the right order, with all panels on the same side.

If any of the units have been subjected to rough handling, the unit frames may be sprung. If it is difficult to assemble the units, make use of the special tower assembly tool in conjunction with the strap wrench as shown in figure 3—2. Both are packed in Case CY-1060/TPS-1D (see figure 3—3).

The antenna base and the modulator both have pins on all four lower corners, which fit the mounting (base frame). If the antenna is erected on a roof or other structure, the mounting (base frame) then is used to mount the antenna. When mounting the antenna base on the receiver-transmitter, orient the unit with the servo amplifier panel to the front of the equipment.

The first three cased units are stacked by hand, and the four remaining units are hoisted in place by use of a gin pole or A-frame. Figure 3—4 shows a hoisting arrangement which has been proved satisfactory.

The lifting device should be capable of safely lifting at least 500 lbs. A suggested method of testing the set-up is to use the weight of three men, one or two rope slings attached to the lifting hook being used for foot slings or hand grabs.

The steadying guy cable shown in figure 3—4 is used as a precautionary measure in case a unit swings while being lifted. The base of the pole should be lined up with the center of the stack and dug in so that it will not slip.

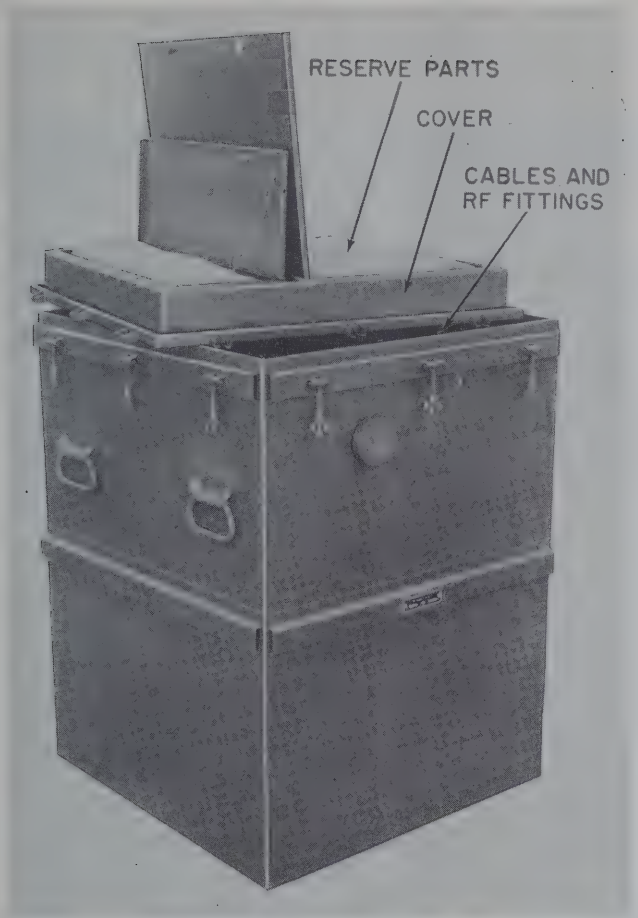

Figure 3—3. Case CY-1060/TPS-1D Details

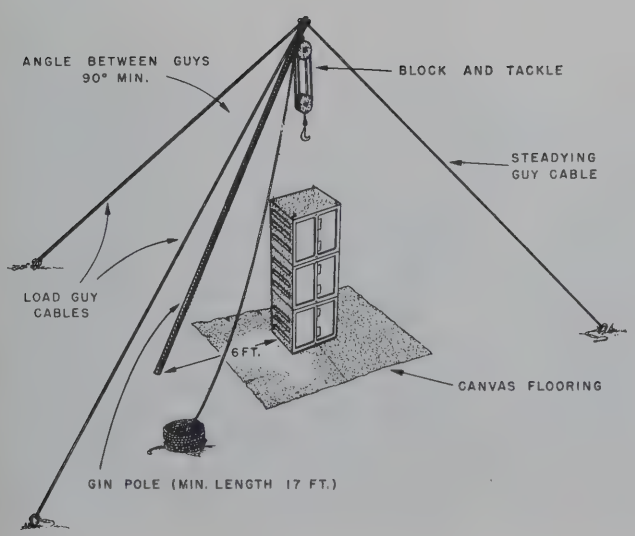

Figure 3—4. Hoisting Arrangement for Erecting Units

The use of a pole of the minimum length (17 ft) makes it necessary to mount the antenna on the antenna base with the horn assembly removed and with no antenna reflector sections attached. These items are added after the two units are in place. When installing the reflector sections, assemble the intermediate and outer sections on the ground and use rope slings to steady the assembled sections while they are being attached to the antenna.

If the gin pole is 21 ft or more long, the antenna base and antenna units can be hoisted separately and with the antenna completely assembled. It is necessary to temporarily remove the steadying guy cable when raising the antenna.

Shelter S-68/TPS-1D is arranged for the panel side of the equipment to face the right side of the shelter (right side when facing the entrance from the outside).

To avoid misplacing small items (tent stakes, etc.), it is best to unpack such parts as needed. Cases CY-2071/TPS-1G and CY-2072/TPS-1G which contain the antenna parts, are held together by hand-screws, the method of opening these cases being obvious (see figures 3—5 and 3—6).

To set up the equipment in the field, proceed as follows (see figure 3—1):

(1) Spread out the canvas flooring in a level area having good water drainage.

Note

Orient the entrance side of the flooring as desired (usually leeward side relative to direction of prevailing storms). The entrance side of the flooring is identified by the wide spacing of grommets on center of one side of flooring.

(2) Place Mounting MT-960/TPS-1D (two rails) on the locating spots at the center of the canvas, with the ends of the rails marked FRONT towards the F marked on the flooring (see figure 3—7).

(3) Set Radar Modulator MD-144A/TPS-1D on the mounting, with the panel side of the unit also facing the F, and secure the unit to the mounting.

(4) Adjust the leveling jacks with the leveling rod so that the weight of the modulator is evenly distributed with the unit approximately level. (The rod is packed in Case CY-1060/TPS-1D; see figure 3—3.)

(5) Set Azimuth and Range Indicator IP-141A/TPS-1D on the modulator and secure the four corners.

(6) Likewise set and attach Signal Comparator CM-36A/TPS-1D to the indicator.

(7) Erect the gin pole or A-frame, with the lifting point directly over the center of the stack (see figures 3—4 and 3—8).

(8) Hoist and set Power Supply PP-674A/TPS-1D in place on top of the signal comparator, and secure corners (see figure 3—9).

(9) Attach and anchor the four 25-ft lengths of rope to the carrying handles of the power supply unit

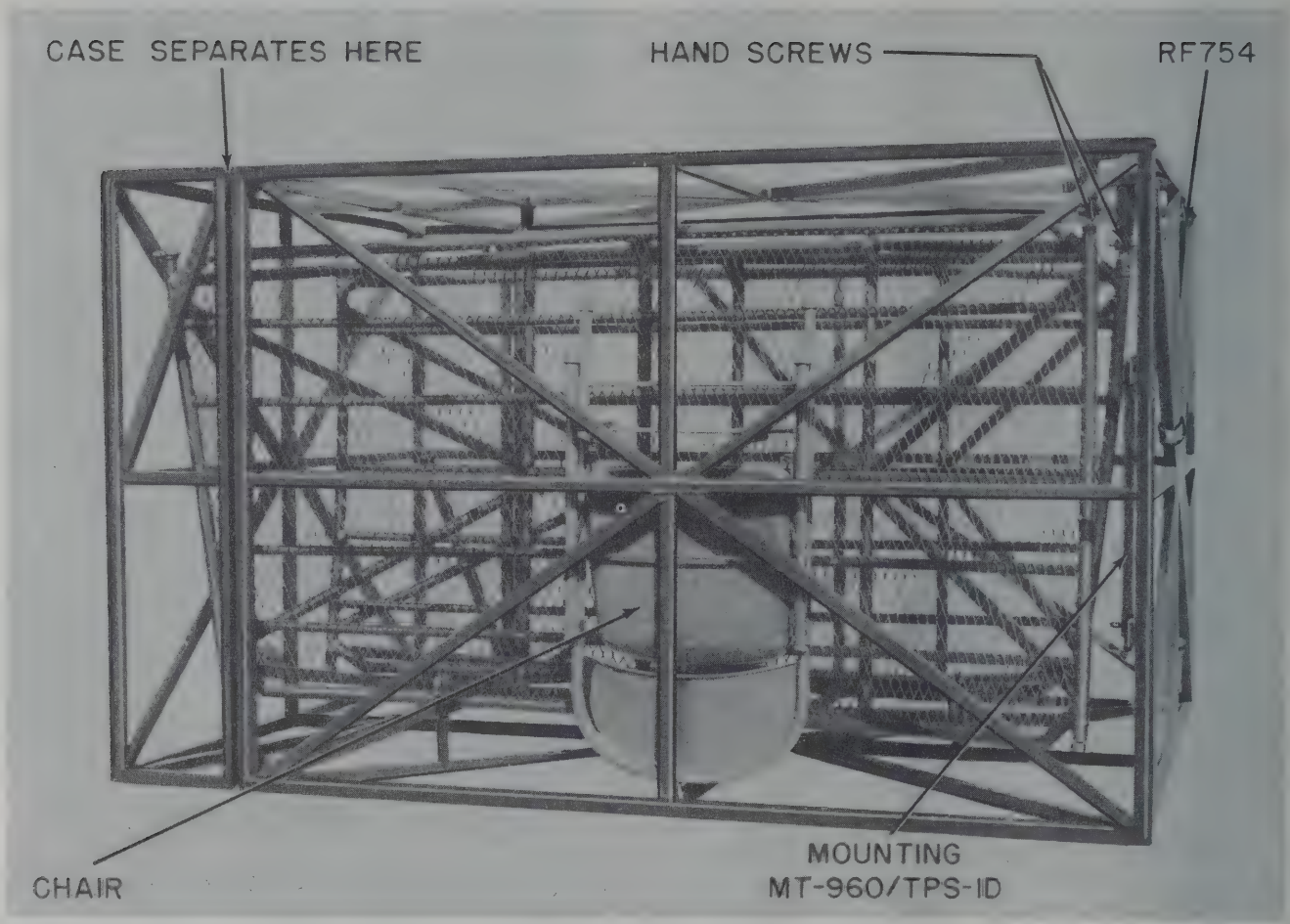

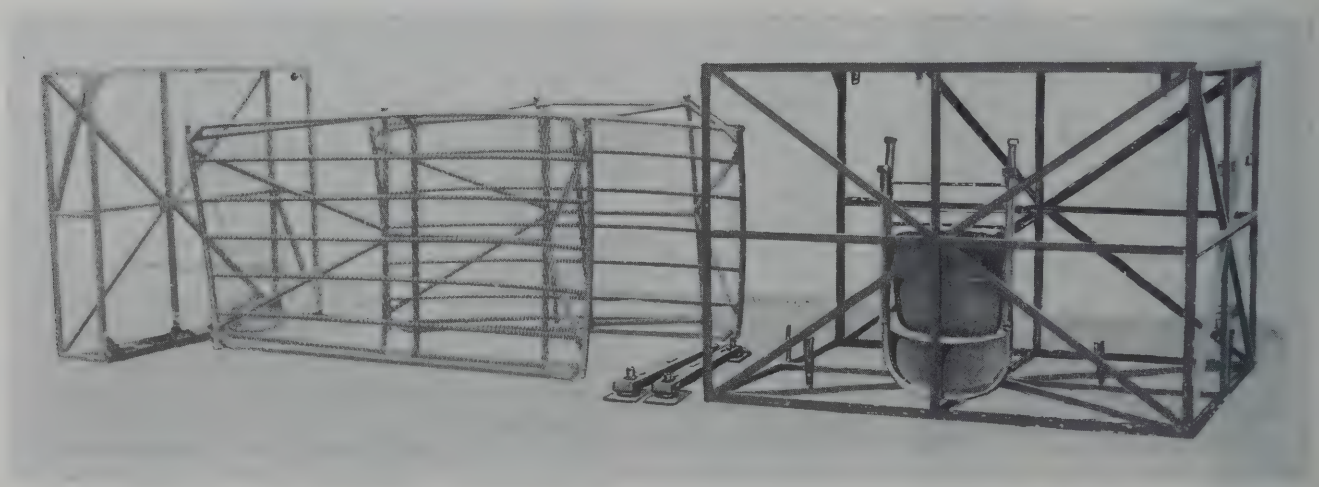

Figure 3–5. Case CY-2071/TPS-1G Details

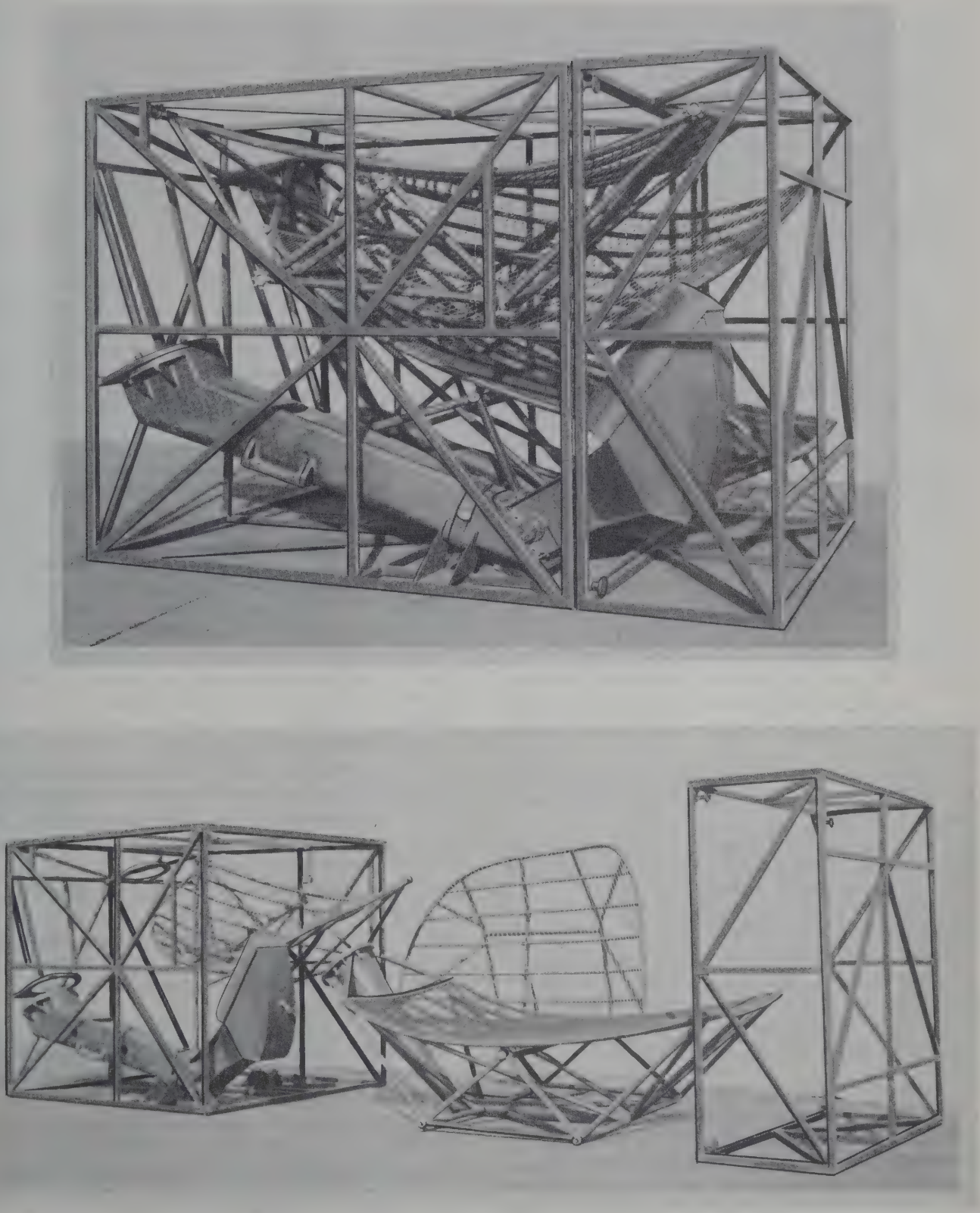

Figure 3–6. Case CY-2072/TPS-1G Details

Figure 3–7. Stacking Bottom Units

so that the structure can be temporarily guyed at four points. (Use two tent stakes at each anchorage point.)

(10) Relevel the structure (by eye), if necessary, with the mounting jacks before anchoring the four rope guys.

(11) Hoist and set Radar Receiver-Transmitter RT-212A/TPS-1D on top of the power supply, and secure the four corners.

(12) Remove the five sections of Antenna AS-673/TPS-1E from Cases CY-2071/TPS-1G and CY-2072/TPS-1G (see figures 3–5 and 3–6).

Note

When removing these parts from their cases, note that one edge of each reflector section is painted black. When assembling the reflector sections, these edges should all be together on the downward side of the antenna.

(13) If a 17-ft gin pole is used, proceed as follows:

(*a*) Place the shelter fly over the antenna spindle on Antenna Base AB-498/TPS-1G, and attach the four grommet holes at the center of the fly to the four posts beneath the spindle.

(*b*) Slide the rain shield (flange toward antenna base) over the spindle and center the shield on the two positioning pins (see figures 3–12 and 3–13).

(*c*) Remove the four bolts from the antenna base mounting sleeve. The bolts are to be used to fasten the antenna to the spindle (step (*e*) below).

(*d*) Remove the horn assembly from the antenna center section and carefully raise and set the antenna on the antenna spindle, using the spindle positioning pins to align the mounting bolt holes (see figures 3–12 and 3–13).

(*e*) Fasten the antenna to the spindle with the bolts which were removed in step (*c*) above.

(*f*) Fold the fly into a compact roll, and lash it to the side of Antenna Base AB-498/TPS-1G in such a manner that the fly will not interfere with the raising of the units.

(*g*) Raise the two assembled units and secure the bottom of the antenna base to the top of the receiver-transmitter.

(*h*) Assemble and attach the two sets of intermediate and outer antenna reflector sections to the antenna, with the black edges downward (see Note under step (12) above and figure 3–10).

(*i*) Attach the antenna horn assembly to the center post of the antenna (see figure 3–10).

(14) If the gin pole is 21 feet or more long, proceed as follows:

(*a*) Place the shelter fly over the antenna spindle on the antenna base, and attach the four grommet holes at the center of the fly to the four posts beneath the spindle (see figures 3–12 and 3–13).

(*b*) Fold the fly into a compact roll and lash the fly to the side of the antenna base unit in such a manner that it will not interfere with the raising of units. Remove the four bolts from the antenna base mounting sleeve. The bolts are to be used to fasten the antenna to the spindle (step (*b*) below).

(*c*) Raise and secure the antenna base (with shelter fly attached) to the top of the receiver-transmitter.

(*d*) Mount the two sets of intermediate and outer reflector sections on the center assembly section of the antenna (see figure 3–10).

(*e*) Raise the assembled antenna into position over the antenna base spindle.

(*f*) Slide the rain shield over the spindle, with the flange side of the shield downward, and center the shield on the two positioning pins (see figures 3–12 and 3–13).

(*g*) Carefully lower the antenna over the spindle; and using the spindle positioning pins for alignment, set the antenna on the spindle. Remove the cap on the end of the spindle.

(*h*) Fasten the antenna to the spindle with the bolts which were removed in step (*b*) above.

(15) Attach the coaxial fittings RF754 and RF856 (see figure 3–15) to the antenna as shown in figure 3–1. (Use the strap wrench to tighten the knurled fittings.)

(16) Stretch out the four corner ropes of the fly and locate the four guy-cable anchor points on the

Figure 3–8. Erecting Gin Pole

diagonal lines of the tower cross section (see figure 3–14).

Note

These points should be such that, when the fly ropes are attached to the guy anchor fittings which are to be set, the fly will assume its proper shape. The anchor points are 24 feet from the tower when on level ground.

(17) Screw the four anchors into the ground at the located anchorage points, with the anchor rods in line with the top of the tower.

Note

If it is impossible to screw the anchors into the ground or if the soil is light, dig holes and bury the rods, using any available hard material to pack the ends of the rods for good anchorage.

(18) Level the tower by use of the mounting jacks and the spirit level (see figure 3–12) on the antenna base. (Distribute the weight evenly on the four jacks.)

(19) Attach the four guy cable assemblies to the fittings on the top corners of the antenna base (see figure 3–12).

(20) Extend the guy-wire turnbuckles and attach guy cables to the anchors, adjusting the guy length by the use of the cable chain and chain fittings.

(21) Tighten the turnbuckles so that the tower is steady without excessive tension on the cables. (Maintain the level of the tower.)

(22) Attach and secure interunit ground straps.

(23) On the top left side of the servo amplifier assembly (antenna base), remove the captive plate covering the two ventilating ports (see figure 3–16).

(24) Remove the panel covers from cased units.

(25) Loosen the receiver-transmitter unit panel screws and pull chassis outward until safety catches engage.

(26) Loosen the local oscillator assembly securing screw (captive) shown in figure 3–17.

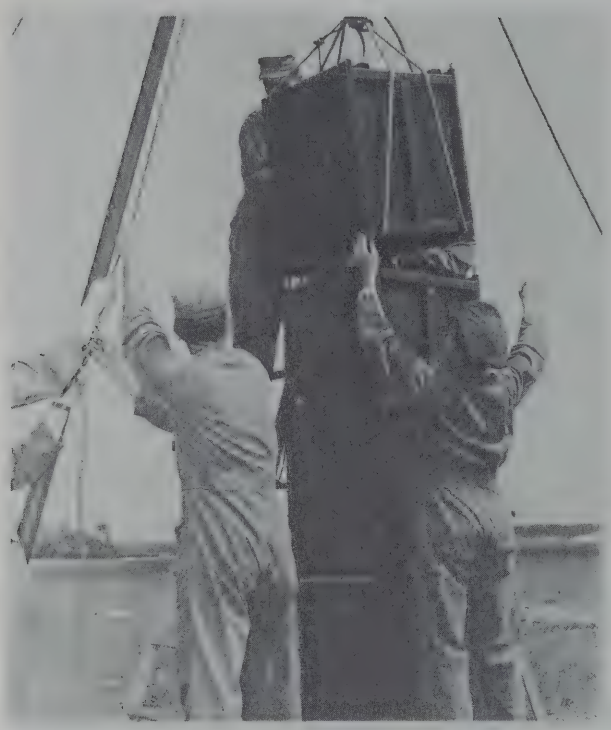

Figure 3–9. Setting Power Supply in Place

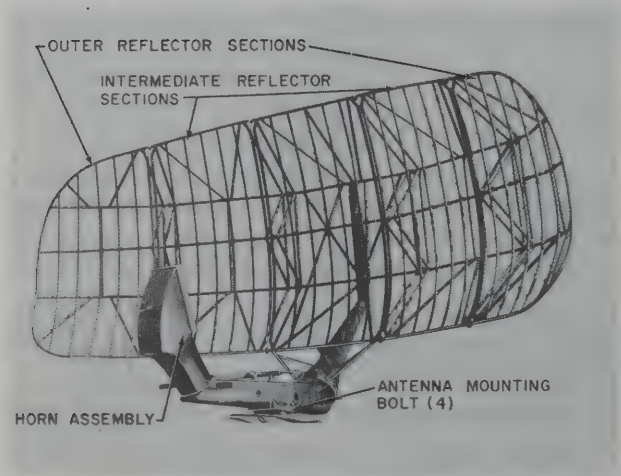

Figure 3–10. Antenna Details

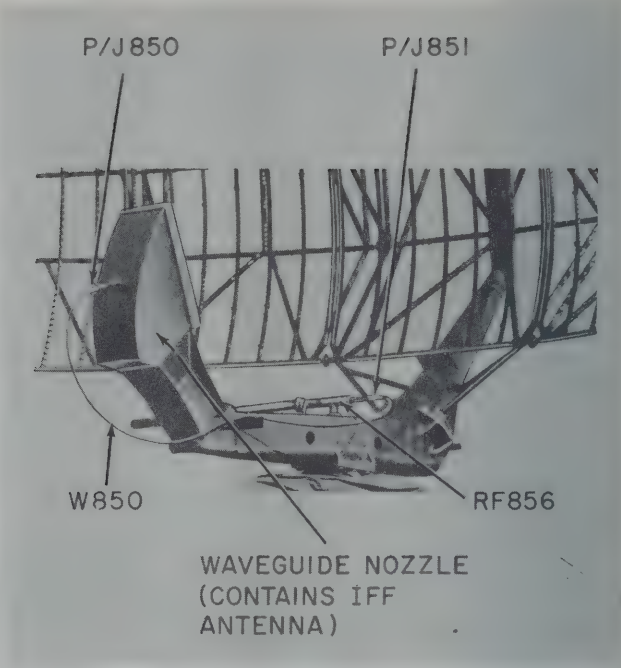

Figure 3–11. IFF Antenna Connections

Note

This screw frees the local oscillator assembly (beneath the chassis) on its shock mounts.

(27) Remove the temporary rope guys.

(28) Install interunit coaxial fittings and cables (including RF851, RF854, and RF855) according to cable markings (see figures 3–1, 3–15, 3–18, and 3–19).

Note

RF855 is a U-shaped rigid coaxial section and fits on the receiver-transmitter (see figure 3–1). Use strap wrench to tighten the knurled fittings of RF851 and RF855.

CAUTION

Securely attach RF851 to RF751 on the antenna base (see figure 3–19) before attaching cable RF854. After attaching RF854 check the centering of the inner coaxial conductors at the top of the antenna spindle (see figure 3–13). If the inner conductors are not centered, center the conductors by movement of the clamps on RF851. Be sure all clamps are tight after recentering. Damage to the antenna base rotary joint will result if the inner coaxial conductors are not centered.

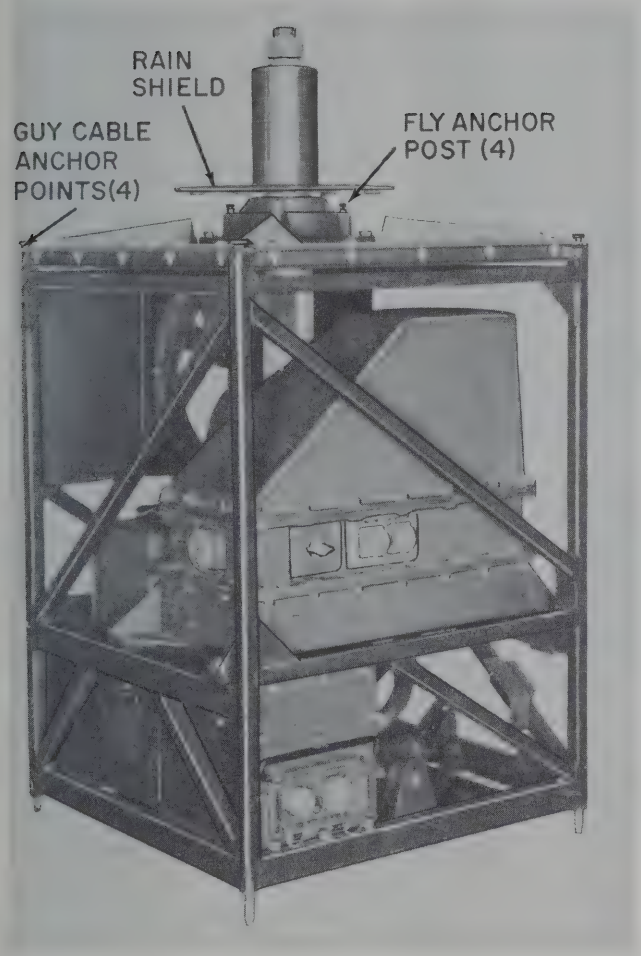

Figure 3—12. Antenna Base Details

(29) Drive the ground stake a foot or so off the edge of the ground cloth on the side opposite to the entrance, and attach the ground cable to the bottom of the modulator and to the ground stake (see figure 3—1).

(30) Connect the power cables W15 and W16 (shown in figure 3—18) to the power sources.

Note

If heater power is to be taken from the system power source, install only cable W15. Heater connections then are made internally as given in paragraph 2.*d.* below.

(31) If IFF equipment is being installed, connect cable W850 between J850 on the IFF antenna and J851 at the end of RF856, as shown in figure 3—11. Secure W850 to the antenna boom, using the cable clamps on the boom. Connect the output cable of the IFF equipment to J756, as shown in figure 3—19.

The output cable fitting (not supplied) required to mate J756 is a type UG-59A/U or equivalent. The required cable impedance is 50.5 ohms.

(32) Connect the IFF power, video, and sync (trigger) cables to J411, J417, and J418 of the power supply, respectively, which are shown in figure 3—26 (connection to J411 is not required when AN/TPX-17 is used, power being obtained from power unit instead of from AN/TPS-1G). If IFF pre-trigger is desired, connect the sync (trigger) cable to J157 of the modulator instead of J418 of the power supply. Disconnect the jumper to terminating resistor R447, as indicated on the resistor panel. Be sure this jumper is in place if IFF equipment is disconnected (see figure 3—21).

All of the IFF receptacles have captive caps to keep the contacts clean. Be sure to replace these caps when IFF cables are detached.

c. ERECTION OF SHELTER TENT.
(See figures 3—1 and 1—12.)

(1) Remove the tent from its canvas bag and arrange it around the tower, with the entrance to the left side of the structure and with the buffer pads towards the tower.

(2) Fasten the top of the tent to the tower by inserting the ends of the canvas into the horizontal slots at the top of the antenna base, the ends being secured by inserting the four retaining rods into the sleeves at the ends of the canvas (see figure 3—1).

(3) Slide the zippers up on the upper four corners

Figure 3—13. Antenna Spindle

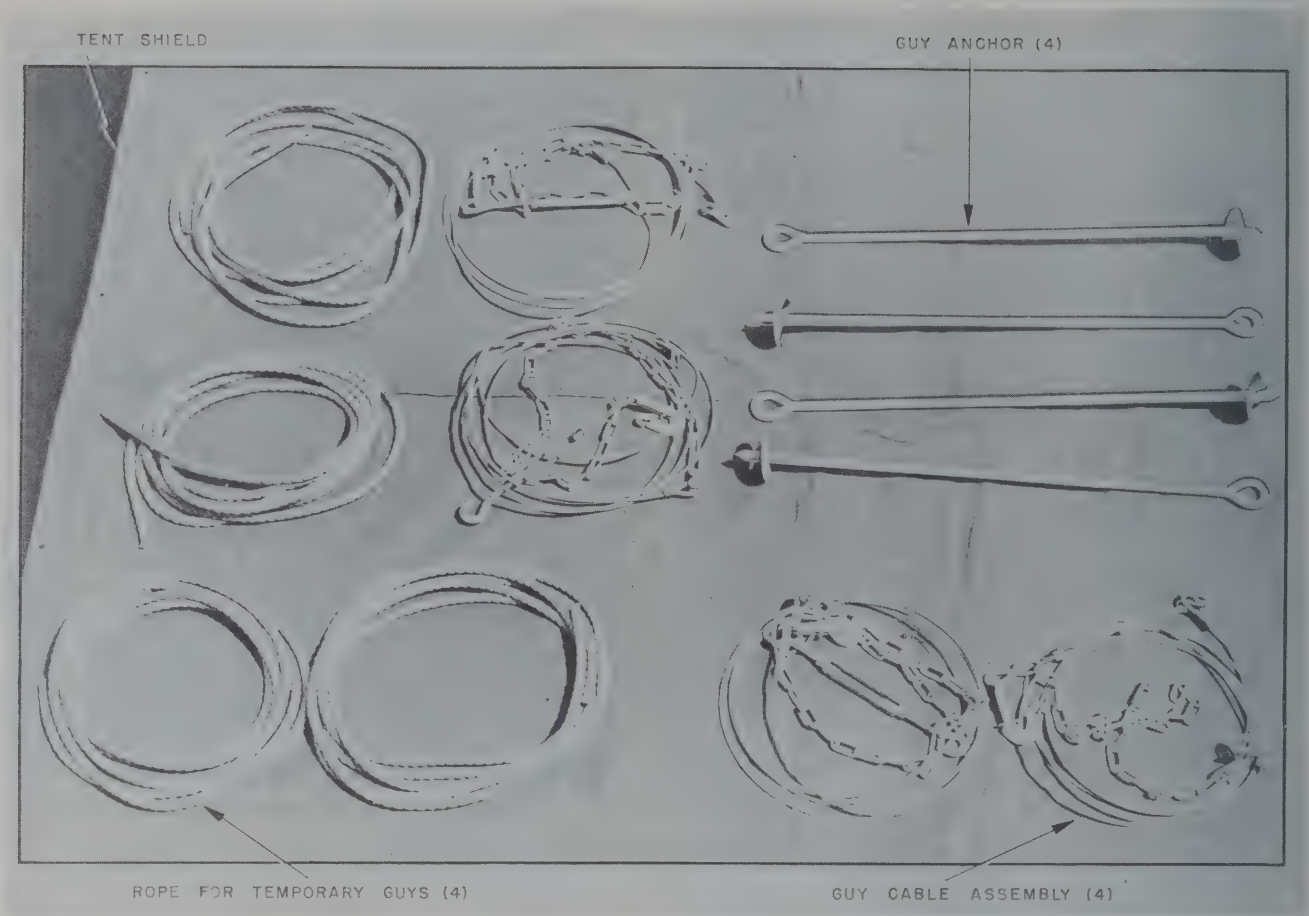

Figure 3—14. Guy Cable Accessories

of the tent and join the tent together with the zippers on the entrance side of the tent.

(4) Attach the blower exhaust pocket in the top of the tent to the antenna base unit, immediately adjacent to the ventilating fan. (Seven snap fasteners are used; see figure 3—1.)

(5) Stake the sides of the tent to the ground, starting at the four corners and using the rope loops of the canvas flooring for fastenings as shown in figure 3—1.

Note

To prevent the entrance of water, the rope loops on the underside of the canvas flooring are threaded through the eyelets of the tent. This arrangement lifts up the edge of the flooring so that the walls of the tent overlap the flooring.

(6) Stretch the upper sidewalls of the tent to the loops in the tent fly and guy cables, and stake the middle points of the sidewalls as shown in figure 3—1.

(7) Attach the canvas light shield, in which the guy cables, guy anchors, etc., were wrapped, to the inside top of the tent, above the entrance, so that it will hang behind the entrance and serve as a light shield.

(8) If screening against insects is desired, attach the screened entrance hatch (transported in the antenna reflector case) to the tent entrance with the snap fasteners provided (see figures 1—12 and 3—1).

d. HEATER POWER CONNECTIONS.

Radio Set AN/TPS-1G is shipped with internal link connections made so that heater power can be supplied from a separate circuit via POWER IN HEATERS jack, J404, located on the power supply unit. If it is desired to take heater power from the system power circuit, change the link connections on E406, located on the lower left front side of the power supply unit, as follows (see figure 3—22):

Change link between W102 and W02 to connect between W102 and 02.

Change link between W103 and W03 to connect between W103 and 03.

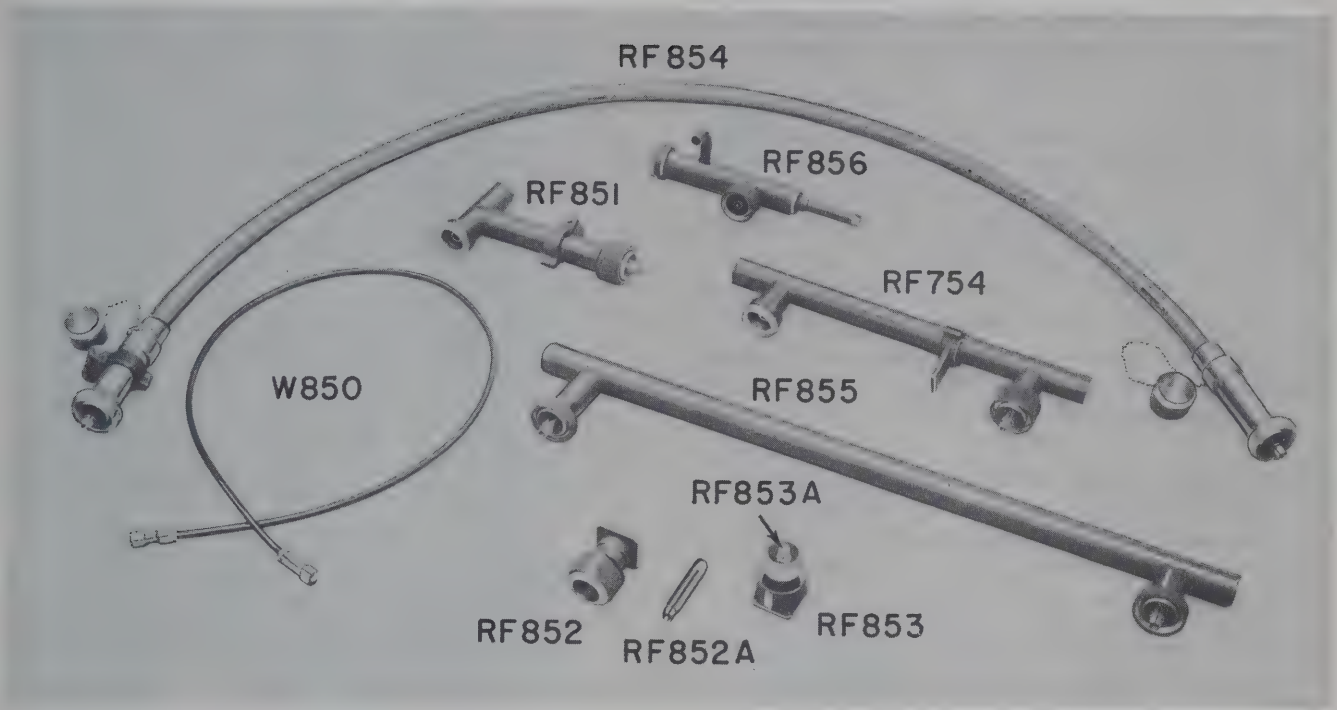

Figure 3—15. RF Coaxial Fittings and Cables

e. MARKER SPACING ADJUSTMENT.

Radio Set AN/TPS-1G is shipped with the markers adjusted for a 5-mile spacing on the 20- and 40-mile ranges, and a 25-mile marker spacing on the 80- and 160-mile ranges. The marker spacing can be made 10 miles on all ranges by an adjustment in the azimuth and range indicator unit. This adjustment is given in Section 7, paragraph 6.*e.*(15).

f. DISMANTLING AND PREPARATION OF EQUIPMENT FOR TRANSPORT.

In general, this operation is the reverse of the setting-up procedure. As there are many details which must be covered, it is best to follow a definite sequence so that no items will be overlooked. Pack all small items as they are detached or disassembled.

Following is an outline of the proper procedure, with instructions for items requiring special attention:

(1) When the equipment is shut down for the last time, stop the antenna in a position which will permit the gin pole or A-frame to be properly erected for lowering the units.

(2) Remove the screened entrance hatch (if used) and take down the tent.

(3) Roll up the tent and pack it in its canvas bag together with the 20 tent stakes.

(4) Remove, coil up, and pack the interconnecting cables.

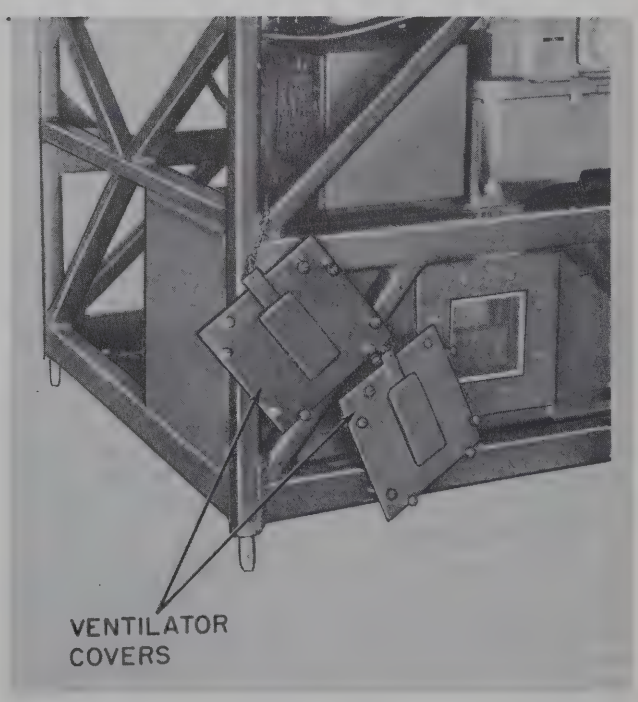

Figure 3—16. Servo Amplifier Ventilation Covers

CAUTION

Take special care to prevent the entrance of dirt into the cable fittings. Be sure to cap the panel jacks which are provided with captive caps as each cable is removed.

(5) Open the receiver-transmitter case, withdraw the unit chassis, and secure the local oscillator with the transit screw shown in figure 3—17. (It is necessary to push downward on the screw to engage the threaded fitting in the local oscillator assembly.)

(6) Disconnect the interunit ground straps, remove the ground cable, and pull ground stake.

(7) Replace the unit covers and the two captive plates on the servo amplifier.

Note

To properly secure the unit covers, first tighten the two cover screws at each of the four corners and then the middle screw or screws on all four sides. The remaining screws then can be tightened at random. Finally, to set the cover, make two trips around the cover, tightening every other screw each time around. (An automatic or ratchet screwdriver will facilitate cover replacement.)

(8) Detach the fly ropes.

(9) Erect the gin pole or A-frame in position to remove the units.

(10) Attach four rope guys to the handles of the power supply unit and remove steel guy cables.

(11) Remove the two antenna coaxial fittings (RF754 and RF856) and replace the captive caps on the antenna horn.

(12) Reverse the procedure used for the erection of the units.

(13) Roll up and pack the canvas flooring.

(14) Remove the tower guy cable anchors.

(15) Check the air valves of the cased units for tightness and contamination of the ceramic disks (see Section 6, paragraph 5.*f.*).

(16) Pack the three cases, CY-1060/TPS-1D, CY-2071/TPS-1G and CY-2072/TPS-1G.

(17) Check the area to make sure that all items are packed.

3. INSTALLATION AND OPERATION OF AZIMUTH AND RANGE INDICATOR AT REMOTE POINT.

If the indicator is to be operated remotely, using the 50-ft extension cable supplied, it can be removed either before or after the tower is erected. In either case it is necessary to use the indicator tower frame section in the tower assembly, as the tower cannot be assembled without it.

To remove the indicator from its frame or case, loosen the two captive screws at the upper inside corners of the case, and also loosen and hinge outward the fasteners at the bottom of the case (see figure 3—20).

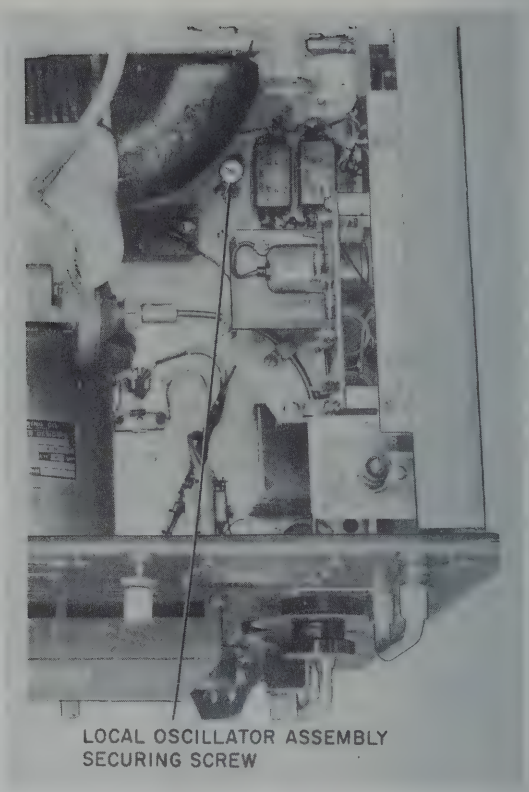

Figure 3—17. Local Oscillator Assembly Securing Screw Location

CAUTION

Loosen the upper captive screws only enough to free the indicator inner case. If the screws are backed out too far, considerable difficulty may be encountered in re-engaging the screws with the lock rods which they actuate.

The indicator may now be pulled out of its case, the four panel handles being used for removal and transport. After the indicator has been remotely located as desired, the 50-ft cable, W4A (see figure 3—18), is used in place of the normal cable, W4, for interconnections. When checking operation, it may be helpful to make use of the phone circuit. (See Section 4, paragraph 4.*g.*)

4. INSTALLATION AND OPERATION OF ANTENNA AT REMOTE POINT.

a. GENERAL.

The antenna (with antenna base) may be installed at a distance that requires no more than 90 feet of coaxial line from the RF outlet of the receiver-transmitter to the RF input to the antenna. When the antenna is in-

stalled remotely, the two mountings MT-960/TPS-1D are used for support. The Antenna Base AB-498/TPS-1G is then set on these mountings and the antenna assembled and mounted on the antenna base.

Because of long-lines effect, it is desirable to keep the coaxial line as short as possible, preferably not over 90 feet in length. (See Section 2, paragraph 3.*c.* and also paragraph 7 of this section.) A 1-5/8 in. air-dielectric (not supplied) coaxial line is required. This line ***must*** be a rigid coaxial line which has low-loss disk supports for the inner conductor. Fittings (RF852-RF852A and RF853-RF853A) for both ends of the line are supplied. Two multiconductor cables (not supplied) for control and power circuits are also required. Data for these cables and cable fittings are given under W10A and W11A in the Parts List (Section 8).

The antenna base and all cased units of the AN/TPS-1G are splash-proof. When the equipment is set up in the field, the shelter and shelter fly provide not only an operating enclosure but also protection for these units.

When the antenna is installed remotely, the shelter fly must be installed over the antenna base unit. This arrangement provides the additional protection that this unit normally has when used in the field.

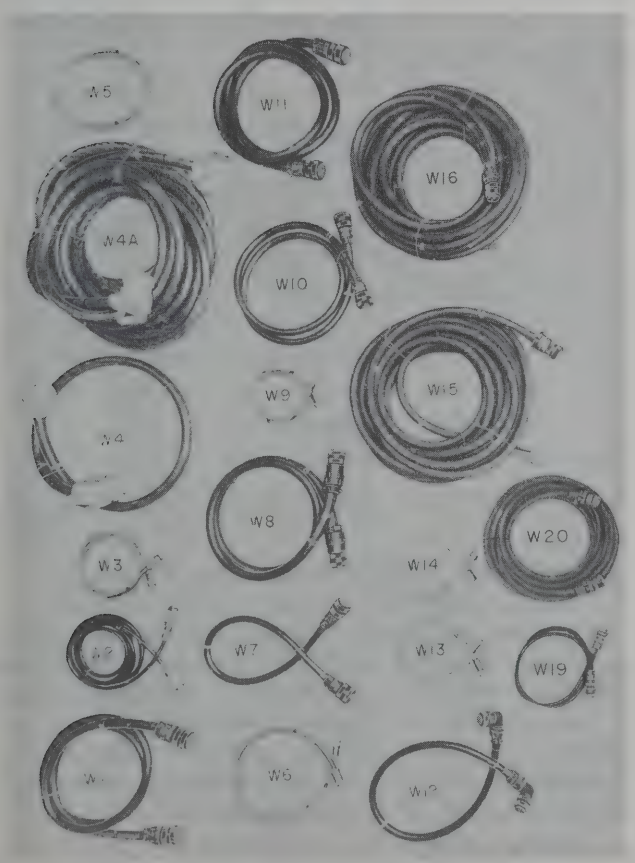

Figure 3—18. System Cables and Plugs

b. INSTALLATION.

(1) Make a template for the mounting holes of the units by setting the antenna base unit on the two mountings (see figure 1—2). Turn the feet of the mountings as required to accommodate the support members, which may be an X frame or a solid platform, or consist of diagonal members. Trace the four mounting holes in each foot of the mountings onto the template.

(2) Using the template, locate and drill the 16 holes required in the supporting structure.

(3) Bolt the two Mountings MT-960/TPS-1D to the support structure.

(4) Depending on the nature of the supporting structure (roof, tower, etc.), determine whether it is more practical to mount the antenna base and antenna separately or to mount these two units assembled.

Note

The weight of the antenna base is 347 lbs, and the weight of the antenna is approximately 260 lbs.

(5) Raise the antenna base with or without the antenna attached (assembling details follow), and secure it to the mountings with the captive locking pins attached to the four corners of the mountings. Remove the four bolts from the antenna base mounting sleeve.

(6) Assemble the antenna as shown in figures 3—1 and 3—10, making sure that the black-painted edges of the antenna reflector are on the downward side.

(7) Place the canvas shelter fly over the antenna base spindle, and attach the grommet holes at the center of the fly to the four posts beneath the spindle (see figures 3—12 and 3—13).

Note

If the antenna base is already mounted, wrap the fly around the unit so that it will not interfere with installing the antenna; otherwise, lash the fly to the antenna base for ease in handling the two units when assembled.

(8) Place the rain shield over the spindle, with flange downward, and align the holes in the shield with the positioning pins in the spindle (see figures 3—10 and 3—13).

(9) Carefully lift and lower the antenna over the spindle and align the holes in the base of the antenna support casting with the positioning pins of the spindle (see figure 3—13).

(10) Bolt the antenna to the spindle with the four bolts which were removed in step (5) above. Remove the knurled protective cap on top of the spindle.

(11) Attach RF fittings RF754 and RF856 to the antenna as shown in figure 3—1.

(12) If the units were assembled before mounting on the support structure, lift and secure the assembled units into place with adequate lifting equipment (1000 lb minimum requirement).

(13) Provide anchorage for the fly guy ropes, which then can be stretched out and attached after the connections of paragraph *c.* below are made.

c. CONNECTIONS.

(1) With the antenna installed remotely and with the remainder of the equipment installed at the operating position, connect the cables and RF fittings as shown in figure 3–1, with the exception of RF854, W10, and W11.

(2) Install and connect W10A and W11A in place of W10 and W11 respectively. (These are the remote control cables to be run between the equipment at the operating position and the antenna base.)

(3) Attach the 1-5/8-in. rigid coaxial line to RF855 at the receiver-transmitter and to RF851 at the antenna base. (Use RF852-RF852A and RF853-RF853A at the ends of the line. These fittings are identical pairs of inner and outer conductor connectors and are shown in figure 3–15.)

CAUTION

The ends of the line should be made up and attached in such a manner that no strain is placed on RF855 or RF851. The use of adequate line supports close to these fittings is recommended.

(4) Make up and attach a ground lead to the antenna base. (Lead should be at least #10 wire size and should be as direct as possible.)

(5) Connect the power line supply to J404 and J405 on the power supply by the use of W16 and W15 respectively. (See paragraph 2.*d.* above for alternative heater supply connections.)

(6) See paragraphs 3, 5 and 2.*e.* above for possible use of other equipment features.

(7) Check the operation of the equipment as outlined in paragraph 6. below.

d. OPERATION.

Operation of the equipment with the antenna installed remotely is the same as that given in Section 4, with one exception. The antenna blower switch S401 is not used, as the ventilating blower B755 in the antenna base has no function.

The blower is made inoperative by the connections of cable W11A, which differ from those of cable W11. In W11A the lead normally used for B755 is doubled up with one of the 115-volt 400-cycle supply leads to reduce the voltage drop of the extended circuit. When checking operation it may be helpful to use the phone circuit (see Section 7, paragraph 1.*i.*).

5. INSTALLATION OF REPEATER PPI.

Radio Set AN/TPS-1G is designed to supply a repeater PPI indicator (RPPI) with trigger signals, video signals and 1-speed azimuth synchro data. The RPPI, interconnecting cables, and power source for synchro excitation are not supplied with Radio Set AN/TPS-1G.

a. INTERCONNECTIONS.

Make connections to J412 for synchro data, to J414 for trigger, and to J419 for video. All jacks are located on the power supply unit. The required mating plugs (not supplied) are one AN3106A-28-1P (P412) and two UG-18B/U's (P414 and P419). The synchro data cable should have accommodations for five active circuits, the other two cables usually being type RG-6/U (72-ohm).

b. CHANGES IN POWER SUPPLY UNIT.

Disconnect terminating resistor R448 in the RPPI trigger output circuit. Resistor R448 is located behind the small door at the lower right and front side of the power supply unit (see figure 3–21). To disconnect R448, remove the jumper to this resistor (as indicated on the resistor panel of R448).

c. ZEROING.

Information for zeroing the RPPI synchro is given in Section 7, paragraph 10.*c.*(3).

6. EQUIPMENT CHECK AND INITIAL ADJUSTMENTS.

The visual check given under *a.* below is best done when the equipment is first set up after unpacking. Thereafter, a visual check is necessary only if the equipment has received severe shocks during transit. Initial adjustments prior to operation are given in 2.*d.*, 2.*e.* and 4. above. The initial operating checks and adjustments are given under *b.* below.

a. VISUAL CHECK.

(1) Pull each chassis out on its slides one at a time. The chassis are released by loosening the knurled panel screws. See Section 5, paragraph 3.*b.*(4).

(2) Inspect each unit for the following:

(*a*) Loose or broken tubes
(*b*) Loose tube shields
(*c*) Loose tube caps, including PPI anode connectors and magnetron filament connector
(*d*) Broken insulators
(*e*) Broken connectors
(*f*) Loose knobs

(3) Make any necessary corrections and close the units.

b. INITIAL OPERATIONAL CHECKS AND ADJUSTMENTS.

After setting up the equipment with all cables in place as outlined in paragraph 2.*b.* in this section, make the checks and adjustments as given below. This procedure is a modification of procedures given in Section 4, and includes transmitter frequency and receiver adjustments that are performed only by the technician. See table 4–1 for the functions of operational controls.

c. PROCEDURE.

(1) With the indicator POWER switch in the OFF position, the ANTENNA ROTATE control set at zero on the ANTENNA SPEED indicator, the TRIGGER

switch (modulator) at EXTERNAL, and the MAGNETRON AGING VARIAC switch (modulator) at OUT, apply power to the equipment (see figures 4–2 and 4–3).

CAUTION

The MAGNETRON AGING VARIAC switch (modulator) should be set to the IN position only when the variac is used for magnetron aging (see paragraph 9.*b.* (3)(*b*), Section 7). At all other times the switch should be set to the OUT position to prolong the life of the variac and prevent inadvertent operation of the equipment at a reduced power setting.

Note

Heater power should be supplied continuously if ambient temperatures drop below 32°F.

(2) On the power supply, check the VOLTMETER for a reading of 109 to 121 volts and check the LINE FREQUENCY meter for a reading of 384 to 416 cycles (see figure 4–1). If necessary, the line voltage can be adjusted by means of Variable Power Transformer TF-238/U.

CAUTION

The tuning meter on the front panel of the azimuth and range indicator (see figure 4–2) indicates line voltage when the meter switch is in the 115 VAC 400~ position. The tuning meter can be used for checking or adjusting the line voltage provided it has been checked against a line voltage of 115 volts as indicated on the power supply VOLTMETER. Component tolerances and differences in the ac line voltage waveform may cause a red line indication on the tuning meter for voltages other than the nominal 115 volts ac. If it is desired to use the tuning meter for monitoring and adjusting the line voltage, it should be checked initially, and periodically thereafter, at least once a week, against a line voltage of 115 volts ac as indicated on the power supply voltmeter.

(3) Throw the POWER switch (indicator) to ON and allow the equipment to warm up for a period of at least five minutes before energizing the transmitter as given in step (7) below.

CAUTION

The time delay relay is set for a five minute warm-up and the transmitter cannot be energized until the end of this period. Since this warm-up time is applicable to temperatures above 0°F., allow a longer warm-up period for temperatures below 0°F. One-half hour is required at the lowest operating temperature −65°F. Proportionately shorter warm-up periods are permissible for temperatures up to 0°F. Damage to the equipment may result if sufficient warm-up is not allowed at temperatures below 0°F.

If a fuse blows during check-up, replace it with a spare of the correct indicated size. If the fuse blows a second time, investigate possible causes. The blower motors should be heard operating in the power supply, the servo-amplifier and the receiver-transmitter. Above 70°F ambient temperature, the blowers should also be operating in the other cased units. Investigate failure of any blower to operate.

(4) During the warm-up period, observe the blown-fuse indicators (power supply unit) periodically. (See Section 5, paragraph 3.*a.* in the event of fuse failure.)

(5) Also during the warm-up period, check the magnetron filament current (receiver-transmitter unit) (see figure 4–4), using the MAG. FIL. position of the TEST SELECTOR switch and the red line meter. (The meter should read 80% of full scale during the 5-minute warm-up and drop to the red line when the transmitter RADIATE ON button (indicator unit) is pressed as given in the next step.)

(6) Check antenna rotation in both directions and at various speeds by operating ANTENNA ROTATE control (indicator unit).

CAUTION

If sweep appears to jump at one point in rotation, the synchros should be aligned in accordance to the procedures outlined in Section 7, paragraphs 6.*e* (19) and 10.*c.*, before further operation.

Note

Antenna cannot be rotated until end of 5-minute delay period. Stop rotation after check.

(7) While observing the MAGNETRON CURRENT meter (receiver-transmitter unit), press the RADIATE ON button (indicator unit). (The reading should be 40-44 ma for normal line voltage as given in step (2) above.)

CAUTION

Damage to the magnetron may result if the magnetron current is greater than 46 ma. High magnetron current may be due to gas in the magnetron. This condition usually can be corrected by aging the magnetron as given in Section 7, paragraph 9.*b.*(3)(*b*). High magnetron current also may be due to high line voltage. In this case, adjust Variable Power Transformer TF-238/U for the correct line voltage. If the magnetron current is not within the limits (40-44 ma) after adjusting the variable power transformer, the taps on the modulator high voltage transformer should be adjusted (see Section 7, paragraph 5.*d.*).

(8) Check MAG. FIL. meter reading to make sure reading is now on red line as indicated in step (5) above.

(9) On the signal comparator, set OPERATION SELECTOR switch to NORMAL and set TEST SELECTOR switch to (1) IF AMPL. LEVEL (see figure 4–5).

(10) Adjust the IF AMPL. LEVEL control to produce a red line reading on the TEST METER of the signal comparator (with RADIATE OFF).

(11) On the indicator, turn the A-scope VIDEO GAIN control fully counterclockwise, and adjust the A-scope INTENSITY and FOCUS controls for the desired illumination and optimum focus (respectively) of the A-scope trace. (Controls are located above the A-scope, see figure 4–2.)

(12) Adjust LIMITER control R3342 as follows:

(*a*) Loosen the four captive screws at the top and bottom of the signal comparator panel and pull the chassis out of its case as far as the chassis catch.

(*b*) Turn R3342 fully clockwise (see figure 4–10).

(*c*) Adjust the A-scope VIDEO GAIN control so that peak signals are below saturation.

(*d*) Adjust R3342 until the signal is approximately three times the height of the grass (noise) on the A-scope. Push comparator chassis back into case but do not tighten screws

(*e*) Readjust the VIDEO GAIN control for about 1-inch signal level on the A-scope.

(13) Connect Tuned Cavity TS-172B/UP (echo box) to J501 on the receiver-transmitter unit, using the special cable supplied with the echo box.

(14) Adjust tuning of echo box to desired operating frequency in the 1220-1350 Mc range and adjust MAGNETRON TUNING control (receiver-transmitter unit) to the echo box frequency.

Note

Echo box has tuning meter. See Instruction Book NAVSHIPS 92920 supplied with unit for operation details.

(15) On the indicator unit set the A RANGE SELECTOR switch to 20.

(16) Hold the L.O. MOTOR switch in the INC position for at least one-half minute. (This tunes the local oscillator to its high-frequency extreme.)

(17) Check the COHO and crystal SIG. currents with the TEST SELECTOR switch (receiver-transmitter unit) and its associated meter.

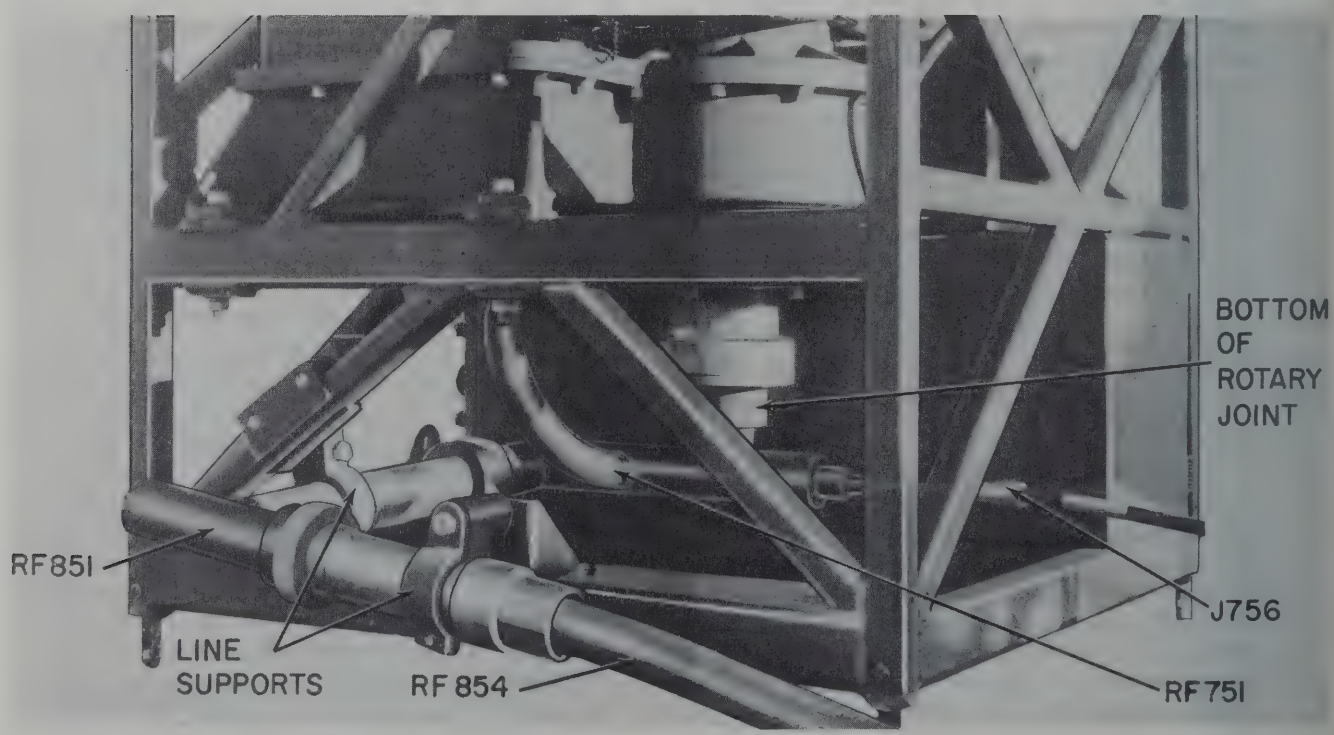

Figure 3–19. Antenna Base Coaxial Line Support

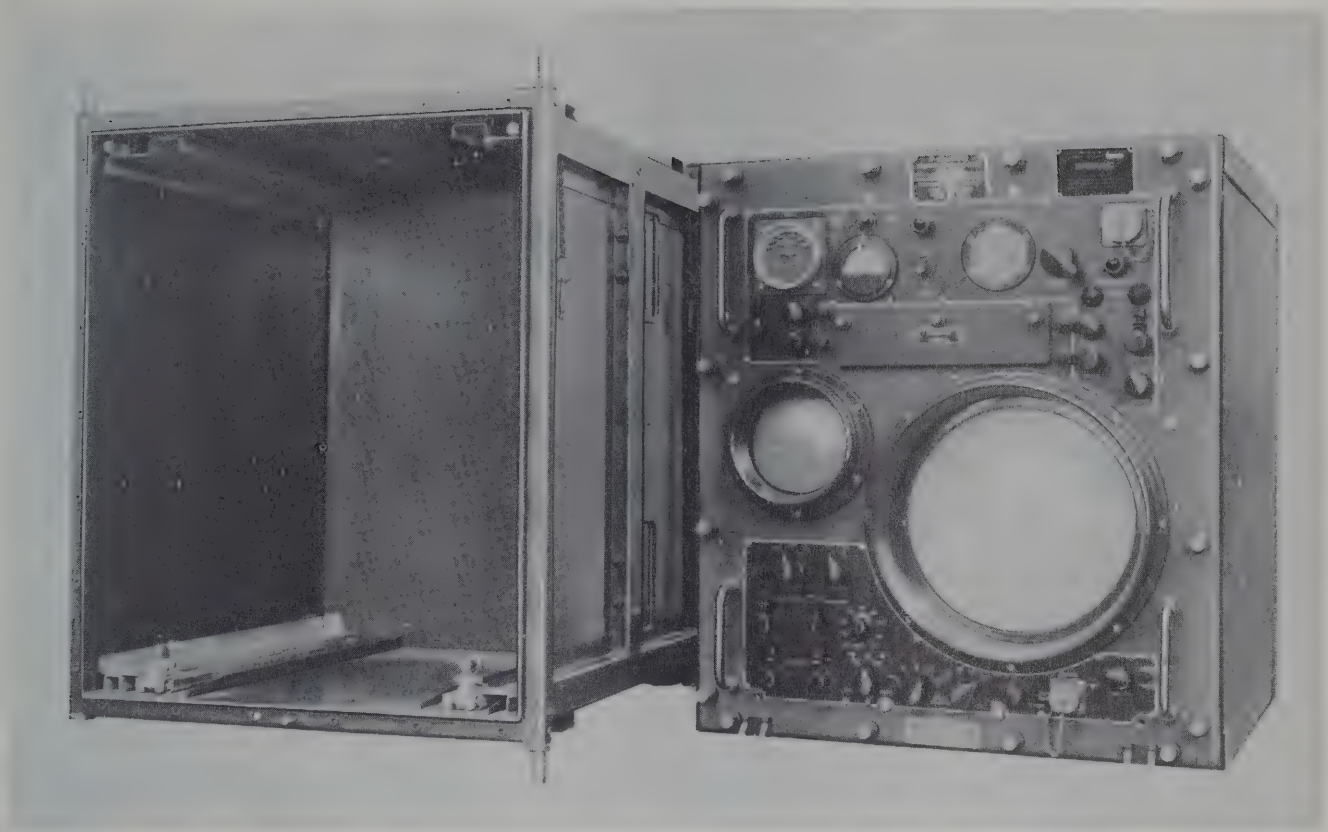

Figure 3—20. Azimuth and Range Indicator Removed From Case

Note

If meter readings are not at, or close to, red line, make adjustment as given in Section 7, paragraphs 9.*b*.(2)(*b*) and 9.*b*.(2)(*c*) as applicable.

(18) Tune the local oscillator for maximum signals by operating the L.O. MOTOR switch (indicator unit) in the DEC position for one-half second periods while observing the A-scope.

Note

Make adjustments carefully so that the local oscillator will not be tuned through to the low-frequency side of the signal. (Signal strength is about the same on the low side.) If there is any question of being on the correct side, repeat step (16) and retune.

(19) When echo box signal appears, operate the L.O. MOTOR switch momentarily in the INC and DEC positions so as to tune for maximum width of the echo box signal as seen on the A-scope. (The echo box signal appears as a solid signal extending from the zero range position of the A-scope as shown in figure 4—9. The TUNING METER (indicator unit) may also be used for indication of signal amplitude.)

(20) Detune echo box and position antenna by means of ANTENNA ROTATE control for display of as many targets as possible on A-scope.

(21) Carefully observe the A-scope for possible cobweb appearance of signals.

Note

A cobweb or indistinct appearance of signals generally denotes magnetron frequency instability. (See Section 2, paragraph 3.*c*.)

(22) If signals are clear, proceed to next step; otherwise change the transmitter frequency by a few megacycles and retune the receiver by repeating steps (14) through (21) above; when a stable frequency is found, proceed as follows:

(*a*) Pull the signal comparator chassis out of the case as far as the chassis catch.

(*b*) Adjust C305 on the top side of the signal comparator chassis to the mid-position of the region producing maximum signals (see figure 4—10).

(*c*) Adjust for maximum signals as in step (18) above.

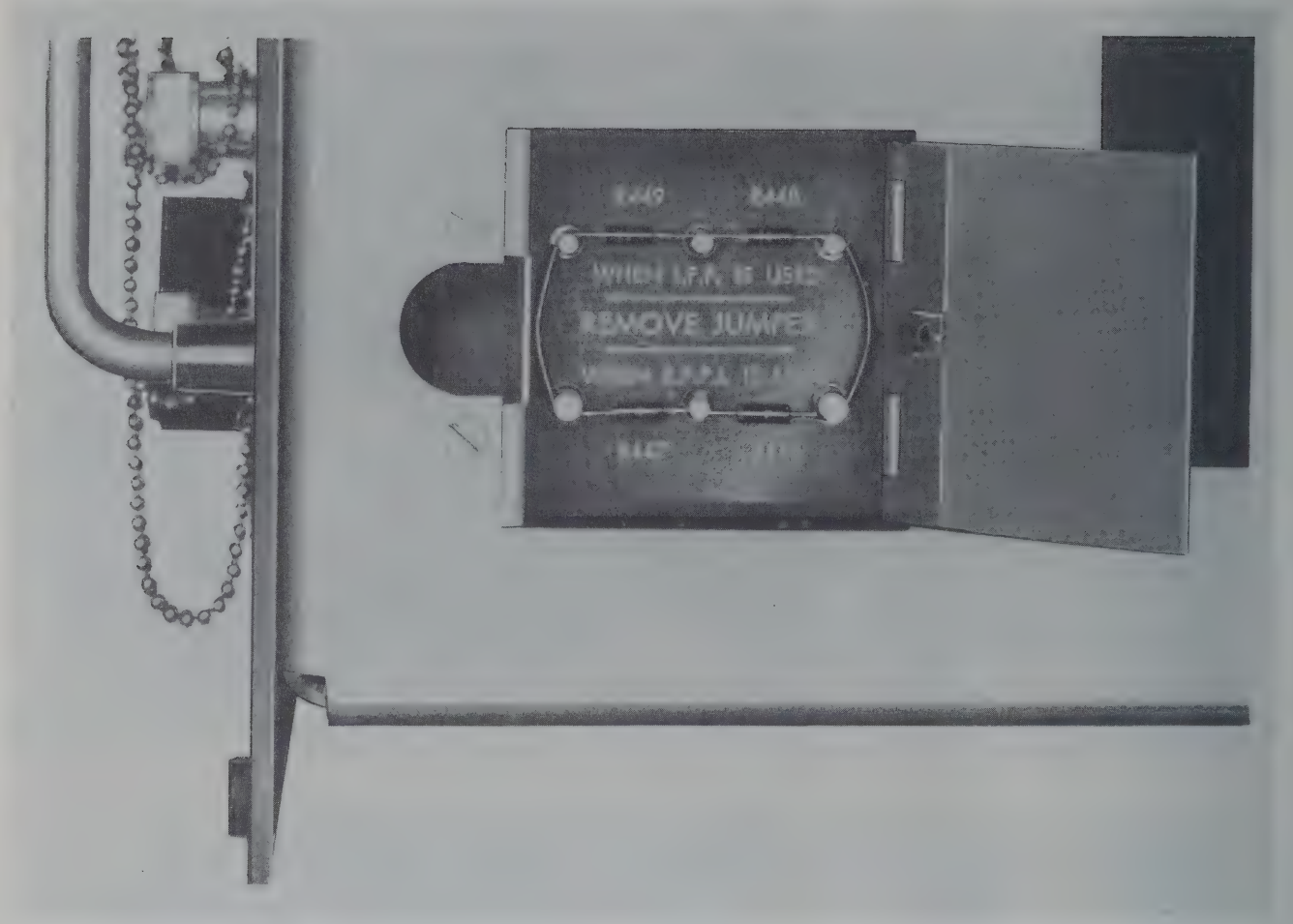

Figure 3—21. RPPI and IFF Trigger Circuit Terminating Resistor

(23) Tune the cavities assembly in the receiver-transmitter unit as given in Section 7, paragraph 9.*b*(2)(*a*).

(24) Check and adjust, if necessary, signal and coho crystal current as given in step (17) above.

(25) Re-tune the echo box for maximum meter reading with the TUNE-RINGTIME switch in the TUNE position. It will be noted that the maximum reading is coincident with maximum ringtime as observed on the A-scope.

(26) At the indicator, depress the RADIATE-OFF button.

(27) On the signal comparator panel, adjust the screwdriver controls (figure 4—5) as indicated on the nameplate. (Note the positions of the OPERATION SELECTOR switch for the different positions of the TEST SELECTOR switch.)

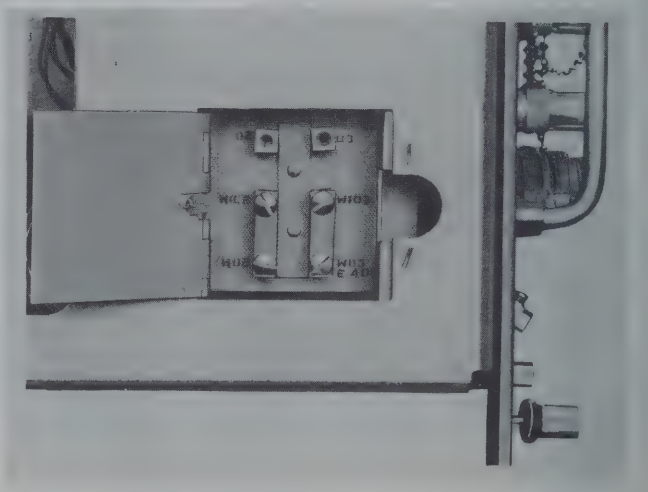

Figure 3—22. Heater Power Link Connections

(28) At the indicator, depress the RADIATE-ON button.

(29) Set the OPERATION SELECTOR switch (comparator) to COHO ADJUST and turn COHO SYNC control R2355 (a screwdriver adjustment) fully counterclockwise. (See figure 4–5.)

(30) Remove plug P304 from receptacle J304 (signal comparator) and observe the signals near the start of the A-scope sweep. If C361 requires adjustment as given in the next step, the signals will be broken into flat-topped waves with many vertical lines reaching saturation but with wide spacings between them. A beating or pulsing effect will also be noted. (See figure 4–11D.)

(31) On the signal comparator chassis, carefully turn C361 in either direction until the fixed bank of targets is no longer broken up by coho action. Reverse direction of the adjustment of C361, and move same *very slowly* and in the same direction. As C361 is turned slowly, the fixed targets will be broken into flat-topped waves, getting less in number and wider apart in spacing. Adjust C361 until the pulsing or beating effect becomes zero. If the flat-topped waves appear to move towards or away from the start of the A-scope sweep, adjust C361 until the apparent movement reverses direction. The point of reversal denotes that this is the "zero beat" position and that the coho oscillator is exactly in frequency with the 60Mc lock-in signal fed from the coho pre-amplifier. Adjust C361 as near the point of reversal as possible. The fixed targets now will be broken into a few flat-topped waves with ample grass apparent where no signals are displayed. (See figure 4–11A.)

(32) Set the signal comparator TEST SELECTOR to COHO LEVEL and adjust COHO LEVEL potentiometer R2351 to produce a red line reading on the comparator TEST METER. Recheck adjustment of C361 (step 31) and reconnect P304 to J304 (removed in step (30) above).

(33) Turn COHO SYNC control R2355 (comparator panel) counterclockwise until the A-scope signals unlock, as indicated by a slow change in the character of the signals.

Note

If by chance C361 was set exactly, this effect may not be apparent.

(34) Slowly turn the COHO SYNC control clockwise until the signals lock-in (become steady). (See figures 4–11A and 4–11C.)

(35) On the comparator panel, turn the OPERATION SELECTOR switch to GATED MTI and adjust the MTI BALANCE controls individually for a minimum of clutter signals (fixed targets) (see figures 4–6 and 4–7).

(36) Adjust GATE BALANCE control R3328 as follows:

(*a*) Set the A-scope RANGE SELECTOR to 160.

(*b*) Set the MTI RANGE GATE to 80.

(*c*) Adjust GATE BALANCE control (signal comparator front panel) so that the MTI and normal video levels are equal, as shown in figure 4–14.

(37) Set the OPERATION SELECTOR switch (signal comparator) to NORMAL, set the A-scope and PPI RANGE SELECTOR switches to 160, and rotate the antenna 3 to 5 rpm clockwise.

(38) Check the A-scope VIDEO GAIN control adjustment for a height of approximately 1 inch on limited video signals. (Grass height should be approximately one-fourth of the video signal height.)

(39) With the PPI VIDEO GAIN control fully counterclockwise, set the PPI INTENSITY control at a point where the PPI trace can barely be seen or just disappears.

(40) Advance the PPI VIDEO GAIN control to a point where the trace leaves a milky background. (The milky background is produced by receiver circuit noise and is equivalent to the A-scope grass. It is an indication that the video level is set at the threshold of signal visibility.)

(41) Adjust PPI FOCUS control for best focus of PPI trace.

(42) Note the noise level on both scopes, turn the OPERATION SELECTOR switch (signal comparator) to GATED MTI, and compare the noise level with that seen on NORMAL.

(43) If the amplitudes are unequal, adjust R3306 on the signal comparator (see figure 4–12) for the same noise level as that seen on NORMAL.

(44) Close the signal comparator.

(45) Turn the OPERATION switch (indicator unit) to GATED MTI and turn the OPERATION SELECTOR switch (signal comparator) to REMOTE.

(46) Adjust the MTI BALANCE controls (indicator unit) for a minimum of clutter signals as in step (36) above. (Temporarily shift the two RANGE SELECTOR switches to the 20 positions for adjustment.)

(47) Switch to NORMAL VIDEO operation and adjust the RECEIVER GAIN control (indicator unit) so the grass level is approximately the same as it is when viewed in GATED MTI operation position.

(48) Adjust the AZIMUTH control to orient the PPI images for true readings in relation to the azimuth scale surrounding the PPI tube. (Alignment is best accomplished by taking visual azimuth measurements on the most distant object which also stands out clearly

on the PPI.) This information is then used to orient the PPI pattern.

Note

To operate the AZIMUTH control, first lift upward on the latch at the left of the control. Then push inward and rotate the control as required. Releasing both the control and the latch disables the control knob. The antenna must be at a standstill when adjusting the AZIMUTH control.

(49) Check the range marks on both A- and PPI scopes by turning the RANGE MARKS MILES switch (indicator unit) to TEST and the A and PPI RANGE SELECTOR switches to 80.

Note

If the indicator is set (internally) for 5- and 25-mile marks, there should be five short 5-mile marks for every 25-mile mark (normal amplitude) on the A-scope and five dim marks for every 25-mile mark (normal brightness) on the PPI. If the indicator is set (internally) for 10-mile marks, check the marks as outlined in the next step.

(50) Check the marks for steadiness and correct number by switching to all ranges on both scopes, with the RANGE MARKS MILES switch in the ON position.

Note

If the indicator is set (internally) for 5- and 25-mile marks, there should be one mark for every five miles of range on 20- and 40-mile scales, and one mark for every 25 miles of range on the 80- and 160-mile scales. If the indicator is set for 10-mile marks, there should be one mark for every 10 miles of range on all scales.

(51) Set the A-scope RANGE SELECTOR switch at EXP and check the expanded sweep by turning the RANGE STROBE control and observing signals on the A-scope.

Note

It should be possible to display any 10-mile portion of the received signals from 20 to 160 miles with the PPI strobe mark (similar to a single range mark) indicating the minimum range of the strobe.

(52) On the indicator unit, set the OPERATION selector switch to NORMAL VIDEO.

(53) On the moduator unit throw the TRIGGER switch to INTERNAL.

(54) Check magnetron current and radar displays on all ranges.

Note

Magnetron current and normal radar operation should be the same with internal triggers as with external triggers. (MTI operation cannot be obtained with internal triggers.)

(55) Return the TRIGGER switch to EXTERNAL.

(56) Adjust MTI GATE CAL control R3382 as follows:

(*a*) Set the signal comparator OPERATION SELECTOR to GATED MTI.

(*b*) Set the A-scope RANGE SELECTOR to 160.

(*c*) Set the MTI RANGE GATE to 160.

(*d*) Pull the signal comparator chassis out of its case as far as the chassis catch, and adjust R3382 (see figure 4—10) until the gate marker is superimposed on the 160-mile marker.

Note

If adapter E310 is installed on the signal comparator (see Section 1, paragraph 7.*a.*(3)), R3382 must be adjusted so that gating occurs beyond the range of the radar system. Proceed as follows:

1. Connect adapter E310 to J310.
2. Set the A RANGE SELECTOR to 160.
3. Observe the position of the gate marker on the A-scope and then adjust R3382 so that the gate marker passes through the 160-mile marker and just disappears off the end of the sweep. Do *not* adjust control beyond this point.

(57) Adjust MTI GATE MARK control R3378 (see figure 4—10) so that the gate marker is just barely visible on the PPI.

(58) Close and secure the signal comparator chassis.

d. IFF ADJUSTMENTS.

The only adjustments required in Radio Set AN/TPS-1G for IFF provisions are the setting of IFF VIDEO control R610 and the setting of USEC DELAY switch S101 (IFF pre-trigger).

(1) The IFF VIDEO control is located on the azimuth and range indicator panel, under the hinged panel marked CALIBRATION CONTROLS. To set this control, proceed as follows:

(*a*) Loosen the three captive screws at the top of the hinged panel and lower the panel.

(*b*) Loosen the locknut on IFF VIDEO control R610.

(*c*) Adjust R610 with a screwdriver for the desired level of IFF signals, as seen on the PPI, and lock the control. (No IFF signals are displayed on the A-scope.)

Note

Adjust the control so that IFF signals are plainly seen with a minimum of interference to coincident radar images.

(2) The USEC DELAY switch is located on the trigger generator chassis of the modulator unit. If IFF pre-trigger is to be used (see paragraph 2.*b.*(32), this section), selection of either a 12.4 or 37 microsecond pre-trigger (dependent upon the IFF system requirements) can be obtained by setting USEC DELAY switch S101 to either the 12.4 or 37 position.

7. FIXED INSTALLATION.

Although primarily designed for field installation, the AN/TPS-1G equipment may be conveniently set up for fixed station operation. The interconnecting cables supplied with the equipment have sufficient length to permit a good arrangement of units in the operating room or area. The suggestions which follow will aid in taking advantage of the inherent flexibility afforded by the equipment design, without making up special cables other than that required for the antenna.

By making use of the indicator extension cable, W4A, the indicator can be set up by itself at the operating position. This permits a good arrangement at the operating desk for accessories associated with the use of the equipment (telephone, logs, charts, etc.). When used in this manner, the indicator with its inner case is removed from the tower frame case. When mounting the indicator on the operating desk, it is best to plan the arrangement so that the inner case can be withdrawn from the chassis, rather than vice versa, for servicing.

The modulator, signal comparator, power supply, and receiver-transmitter units can be grouped at any distance up to 50 feet from the operating position. However, it is suggested that these units be so located that the magnetron current meter on the receiver-transmitter unit can be seen from the operating position. The antenna can be installed and operated remotely as outlined in paragraph 3. above.

The modulator, signal comparator, power supply, and receiver-transmitter units should be provided with adequate mountings. The mountings should be properly braced so as to carry the distributed weight either with the units closed or with the chassis pulled out to their chassis stop positions.

The pins or sockets at the corners of the unit frames can be used for anchorage, pins being required where socket holes are present. Be sure to anchor all four corners so that undue strain will not be placed on the frame when the chassis are part-way withdrawn.

Although units can be stacked as in field installation, it is recommended that each unit be mounted separately and at a convenient height for removing its chassis. The possible arrangements are dependent on the lengths of the interconnecting cables.

When grounding the equipment, use heavy copper braid or copper bus (at least 1 in. wide). The grounds should be made unit-to-unit (except the indicator, if more than 10 feet away from other units). The main ground lead then should be attached to the unit closest to the grounding point. If the indicator is more than 10 feet away from the remainder of the equipment, do not ground the unit separately. (Circuit grounds are included in the interunit cable.) A separate ground is quite likely to produce a ground loop circuit which can circulate ground currents and thus radiate RF noise.

8. PORTABLE INSTALLATIONS.

When the AN/TPS-1G equipment is to be installed in a truck or other vehicle, most of the suggestions for fixed station installation given in paragraph 7 above are applicable.

However, the unit frames are designed mainly to take compression forces present when the units are stacked, in which case the interlocking pins at the corners of each unit become positioning pins which keep the units in line. Consequently, there is one main additional consideration which should be given a portable installation. The method of mounting units should include not only a means for anchoring the units at all four corners but also the use of hold-down brackets or straps. These devices should be capable of taking the upward thrust and twisting moments encountered when the vehicle is traveling over the road.

9. INSTALLATION OF MIL DIAL.

The AN/TPS-1G equipment is shipped with a 360° azimuth dial on the PPI of the azimuth and range indicator. This dial may be replaced by the Mil Dial supplied in Case CY-1060/TPS-1D.

To install the Mil Dial, proceed as follows:

a. Withdraw the indicator from its case as far as the chassis catches.

b. Remove the PPI bezel (shown in figure 5—16) which is held in place by eight screws.

c. Remove the azimuth scale assembly which is held in place by four screws in the PPI electrostatic shield (see figure 5—7).

d. Remove the six screws in the azimuth scale assembly which hold the outer and inner rims together.

e. Mark the 0° position of the azimuth scale on the inner rim, and then push on the azimuth scale so as to separate the two rims and the scale.

f. Set the MIL Dial in position on the inner rim with the zero of the scale aligned to the mark made in step *e* above.

g. Replace the outer rim over the scale, and replace the six screws which clamp the assembly together.

h. Replace the azimuth assembly and the bezel by reversing the procedure of steps *a—c* above.

i. Close and secure the indicator chassis.

CAUTION

To prevent stripped threads, use a small screw driver and extreme caution when tightening screws.

10. OUTLINE DRAWINGS.

Outline drawings for the units of Radio Set AN/TPS-1G are given in figures 3—23 through 3—36.

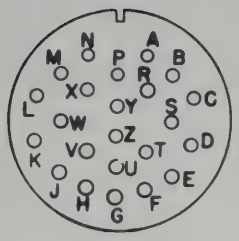

J151
AN3102C-32-13P

HEAT DISSIPATION 800 WATTS
AMBIENT TEMPERATURE DESIGN -65°F TO+135°F OPERATE
-65°F TO+165°F STORAGE
APPROX. WEIGHT OF UNIT (UNCRATED) 347 LBS
" WEIGHT OF UNIT (CRATED) 408 LBS
" CUBE OF UNIT (CRATED) 16.6 CU. FT
" DIMENSIONS OF UNIT (CRATED) 33 X 28X31

TUBE COMPLEMENT

(1) 4B31
(1) 5C22/HT-415
(1) 6AG7
(2) 6SN7WGT
(4) 371B
(1) 5726
(1) 5814A

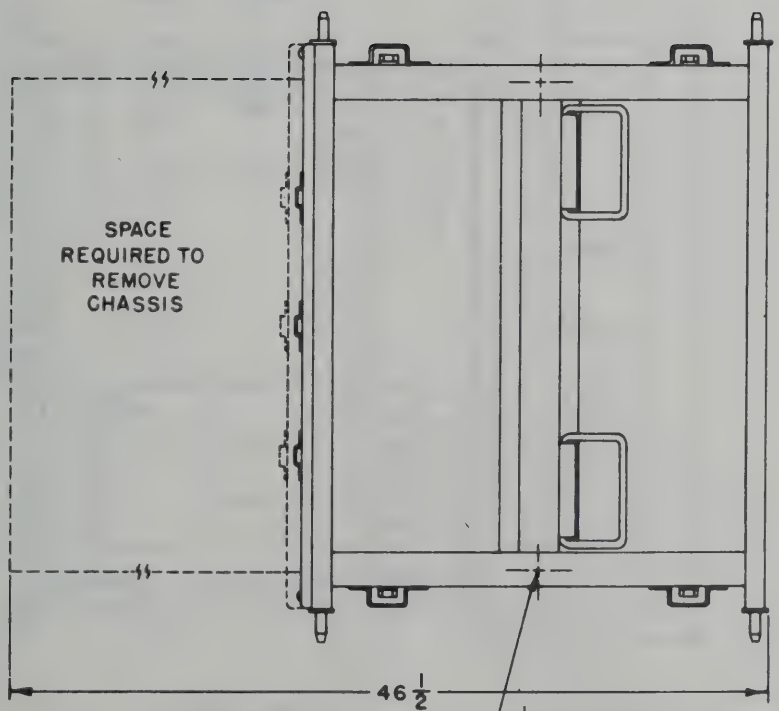

Figure 3—23. Radar Modulator MD-144A/TPS-1D: Outline Drawing

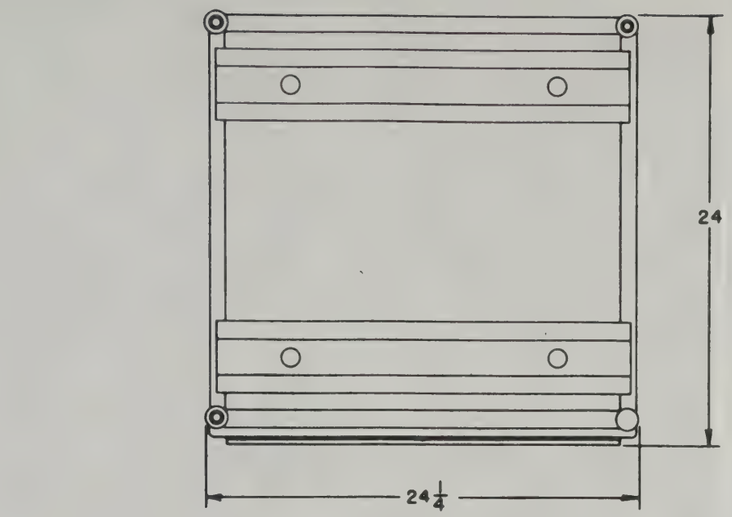

J151
AN3102C-32-13P

HEAT DISSIPATION 800 WATTS
AMBIENT TEMPERATURE DESIGN -65°F TO+135°F OPERATE
-65°F TO+165°F STORAGE
APPROX. WEIGHT OF UNIT (UNCRATED) 347 LBS
" WEIGHT OF UNIT (CRATED) 408 LBS
" CUBE OF UNIT (CRATED) 16.6 CU. FT
" DIMENSIONS OF UNIT (CRATED) 33 X 28X31

TUBE COMPLEMENT

(1) 4B31
(1) 5C22/HT-415
(1) 6AG7
(2) 6SN7WGT
(4) 371B
(1) 5726
(1) 5814A

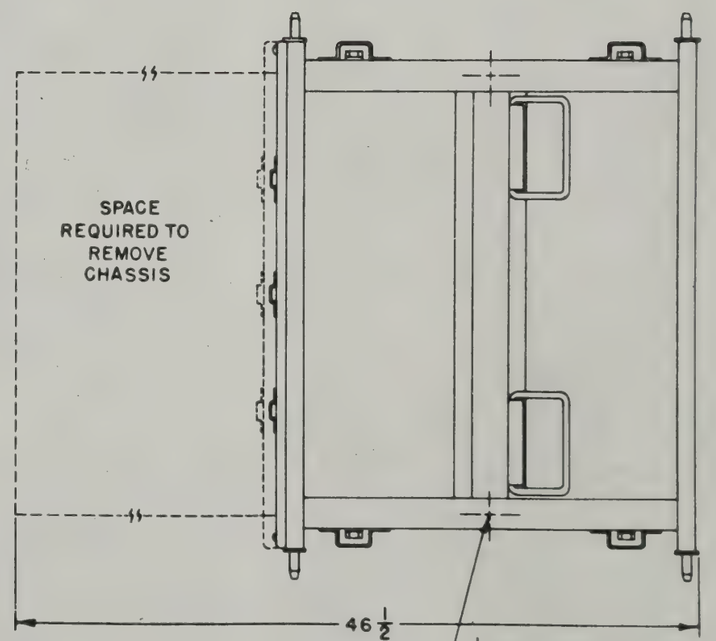

Figure 3–23. Radar Modulator MD-144A/TPS-1D: Outline Drawing

HEAT DISSAPATION 1300 WATTS
AMBIENT TEMPERATURE DESIGN −65°F TO+135°F OPERATE
−65°F TO+165°F STORAGE
APPROX. WEIGHT OF UNIT (UNCRATED) 330 LBS.
" WEIGHT OF UNIT (CRATED) 392 LBS
" CUBE OF UNIT (CRATED) 16 CU. FT.
" DIMENSIONS OF UNIT (CRATED) 33"X 28"X30"

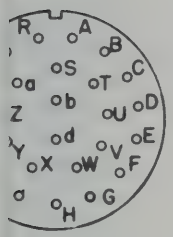

J508
3102C-28-12P

TUBE COMPLEMENT
(1) 1Z2
(1) 2C40
(1) 5J26
(3) 5654
(2) 5842
(2) 6322

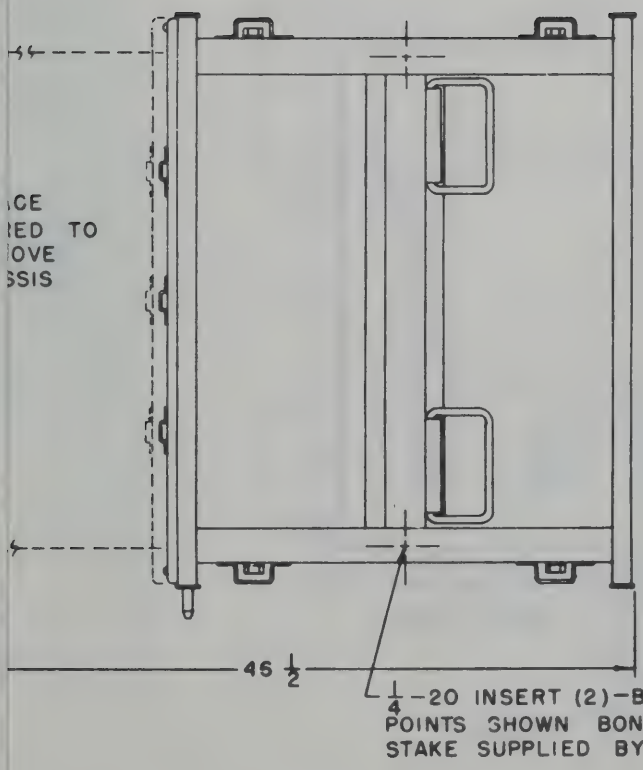

Figure 3—24. Radar Receiver-Transmitter RT-212A/TPS-1D: Outline Drawing

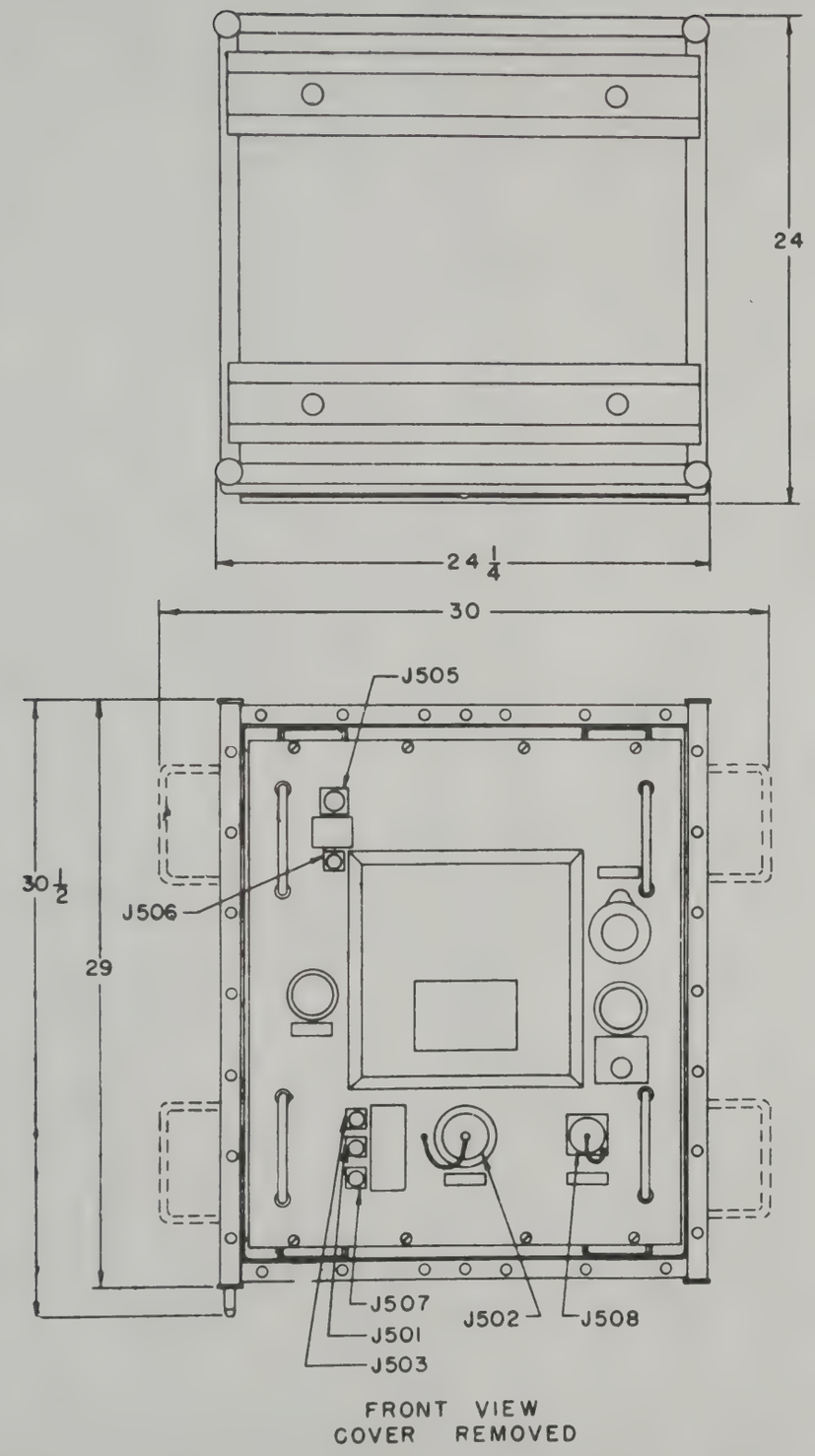

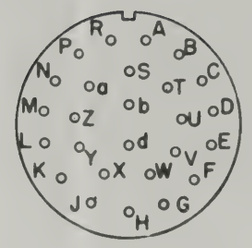

J508
AN 3102C-28-12P

HEAT DISSAPATION 1300 WATTS
AMBIENT TEMPERATURE DESIGN −65°F TO+135°F OPERATE
−65°F TO+165°F STORAGE

APPROX. WEIGHT OF UNIT (UNCRATED) 330 LBS.
" WEIGHT OF UNIT (CRATED) 392 LBS
" CUBE OF UNIT (CRATED) 16 CU. FT.
" DIMENSIONS OF UNIT (CRATED) 33"X 28"X30"

TUBE COMPLEMENT
(1) 1Z2
(1) 2C40
(1) 5J26
(3) 5654
(2) 5842
(2) 6322

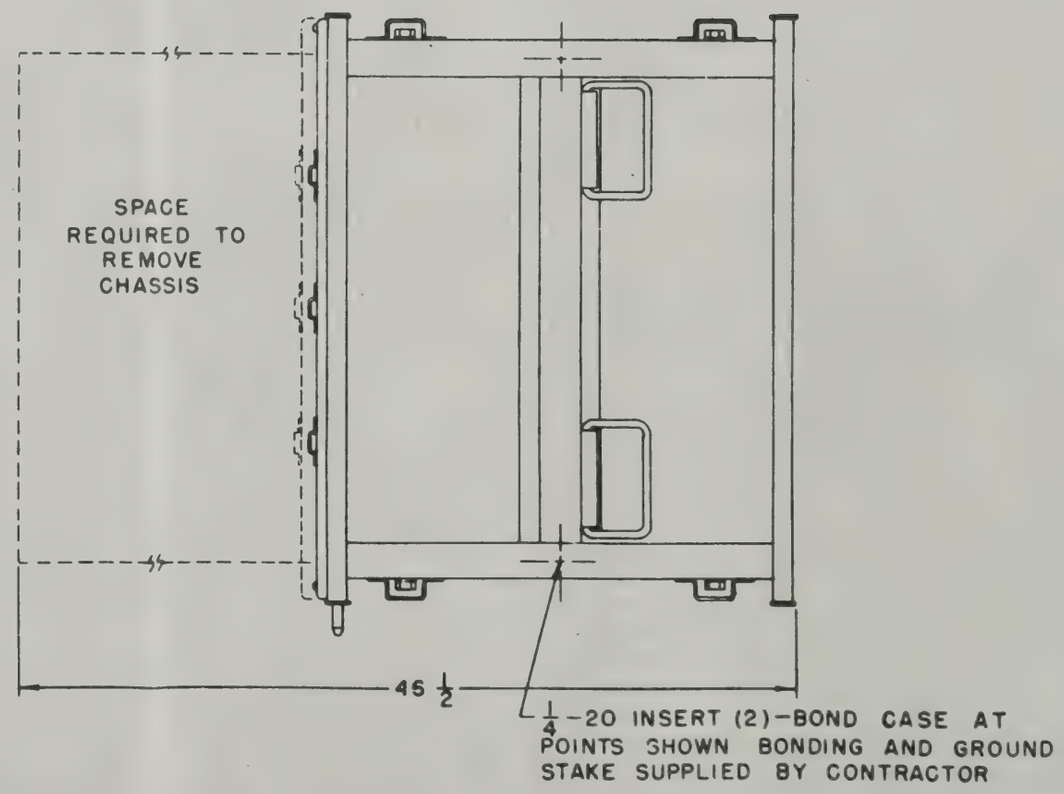

Figure 3—24. Radar Receiver-Transmitter RT-212A/TPS-1D: Outline Drawing

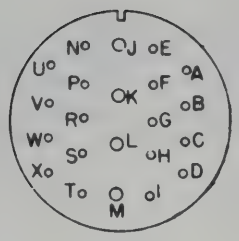

J301
AN 3102D-28-11P

HEAT DISSIPATION 210 WATTS
AMBIENT TEMPERATURE DESIGN − 65°F TO +135°F OPERATE
− 65°F TO +165°F STORAGE
APPROX. WEIGHT OF UNIT (UNCRATED) 146 LBS
" WEIGHT OF UNIT (CRATED) 181 LBS
" CUBE OF UNIT (CRATED) 10.1 CU. FT
" DIMENSIONS OF UNIT (CRATED) 24"X27"X27"

24

TUBE COMPLEMENT

(2) 0B2WA	(3) 5725
(2) 6AG7	(2) 5726
(3) 6AU6WA	(1) 5750
(2) 12AT7WA	(3) 5814A
(24) 5654	(4) 6005

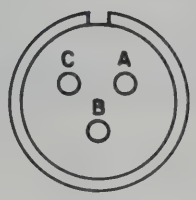

J310
AN 3102-14S-1P

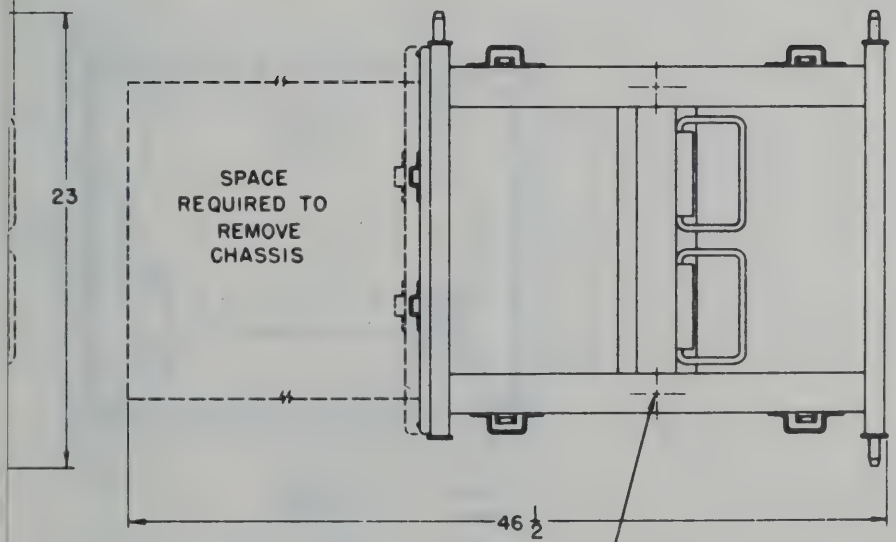

Figure 3–25. Signal Comparator CM-36A/TPS-1D: Outline Drawing

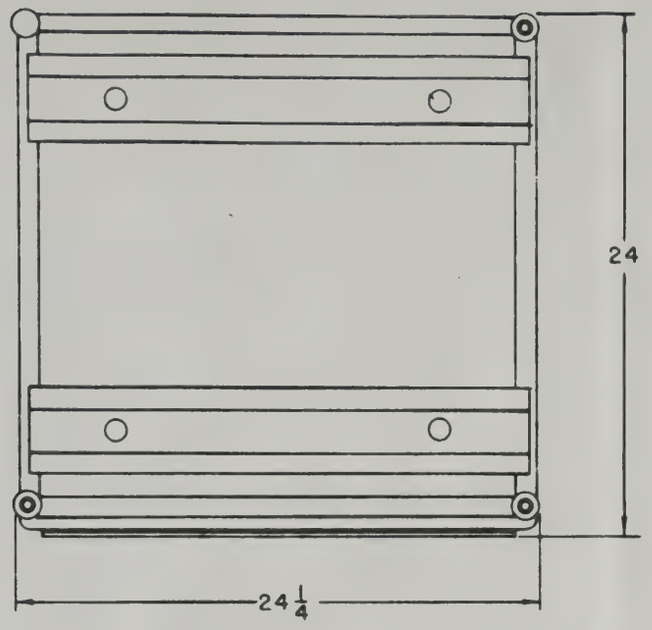

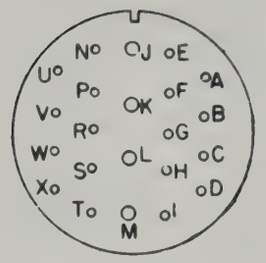

J301
AN 3102D-28-11P

HEAT DISSIPATION 210 WATTS
AMBIENT TEMPERATURE DESIGN − 65°F TO +135°F OPERATE
− 65°F TO +165°F STORAGE
APPROX. WEIGHT OF UNIT (UNCRATED) 146 LBS
" WEIGHT OF UNIT (CRATED) 181 LBS
" CUBE OF UNIT (CRATED) 10.1 CU. FT
" DIMENSIONS OF UNIT (CRATED) 24"X27"X27"

TUBE COMPLEMENT

(2) 0B2WA	(3) 5725
(2) 6AG7	(2) 5726
(3) 6AU6WA	(1) 5750
(2) 12AT7WA	(3) 5814A
(24) 5654	(4) 6005

J310
AN 3102-14S-1P

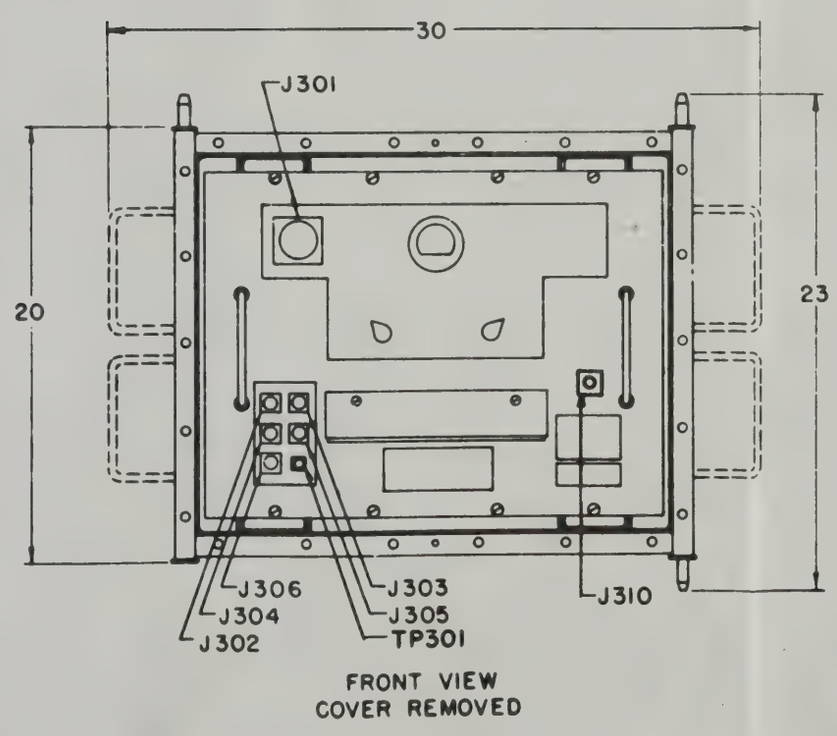

FRONT VIEW
COVER REMOVED

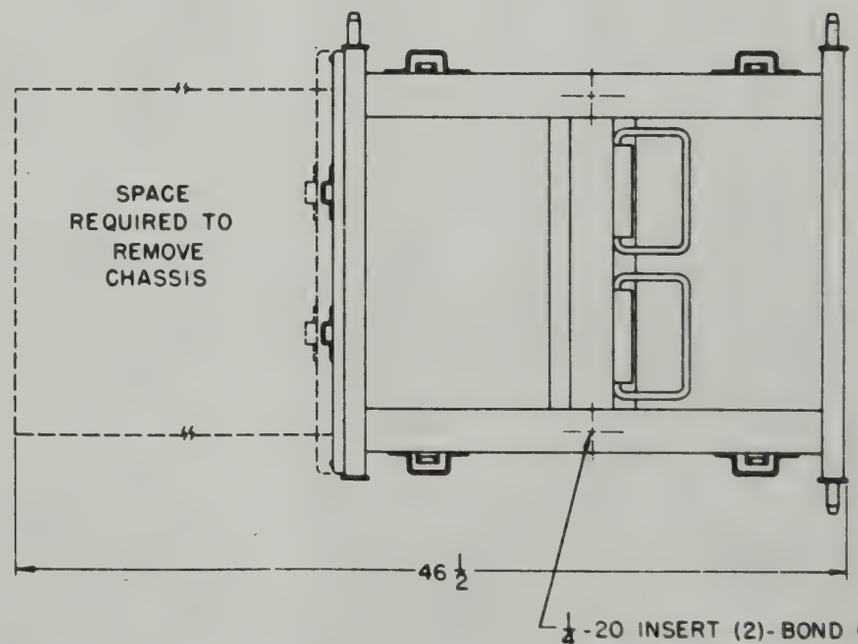

1/4-20 INSERT (2)- BOND CASES AT POINTS SHOWN BONDING AND GROUND STAKE SUPPLIED BY CONTRACTOR.

Figure 3—25. Signal Comparator CM-36A/TPS-1D: Outline Drawing

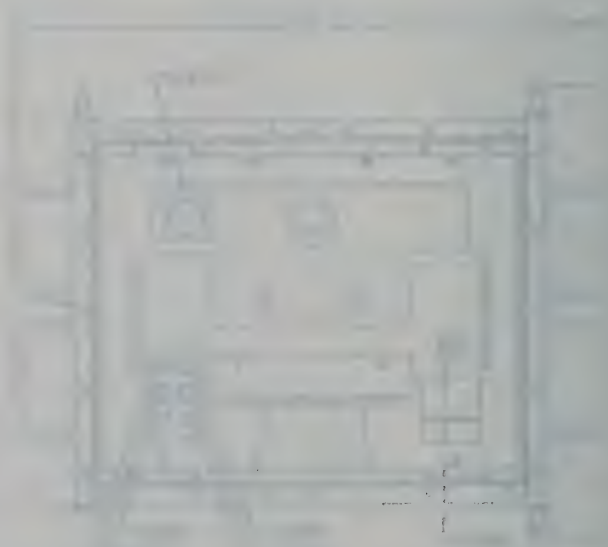

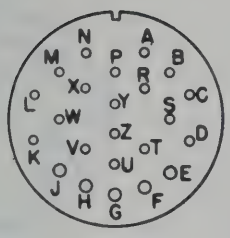

J406
AN3102C-32-13P

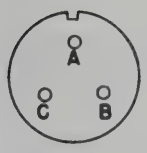

J411
AN3102C-20-6P

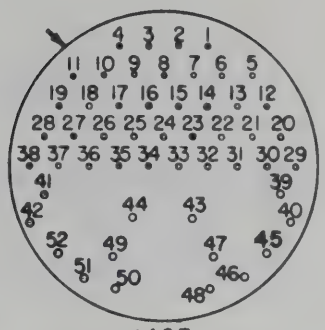

J407
CANNON ELECTRIC CO
TYPE AK-G52-32SL

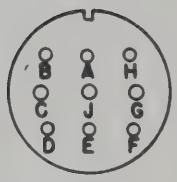

J412
AN3102C-28-1S

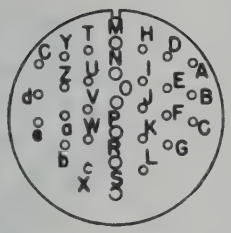

J403
AN3102C-32-8P

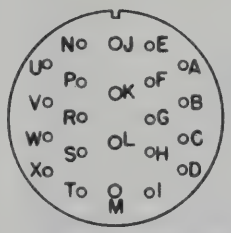

J401
AN3102C-28-11P

J404 & J405
AN3102A-24-9P

J420
AN3102C-16S-1S

HEAT DISSIPATION 350 WATTS
AMBIENT TEMPERATURE DESIGN −65F TO +135F OPERATE
−65F TO +165F STORAGE
WEIGHT OF UNIT (UNCRATED) 223 LBS.
WEIGHT OF UNIT (CRATED) 290 LBS
CUBE OF UNIT (CRATED) 13.9 CU FT.
DIMENSIONS OF UNIT (CRATED) 33"X27"X27"

TUBE COMPLEMENT
(3) 0A2WA
(6) 5R4WGB
(2) 6AH6
(3) 6Y6G
(3) 6080WA

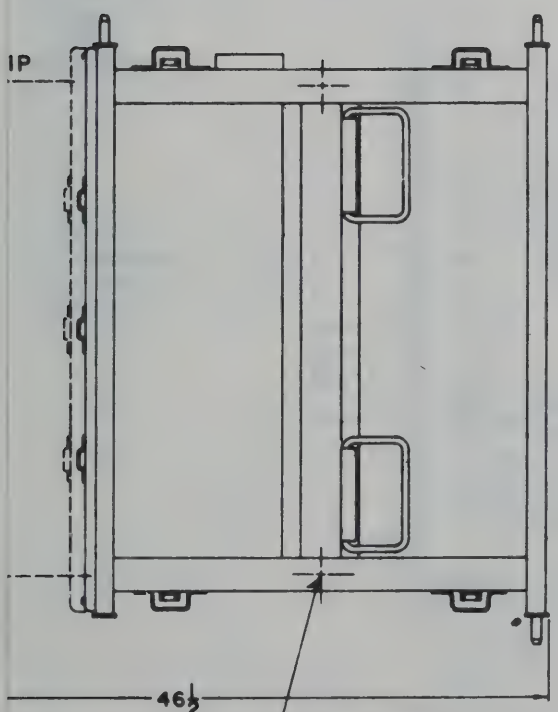

Figure 3—26. Power Supply PP-674A/TPS-1D: Outline Drawing

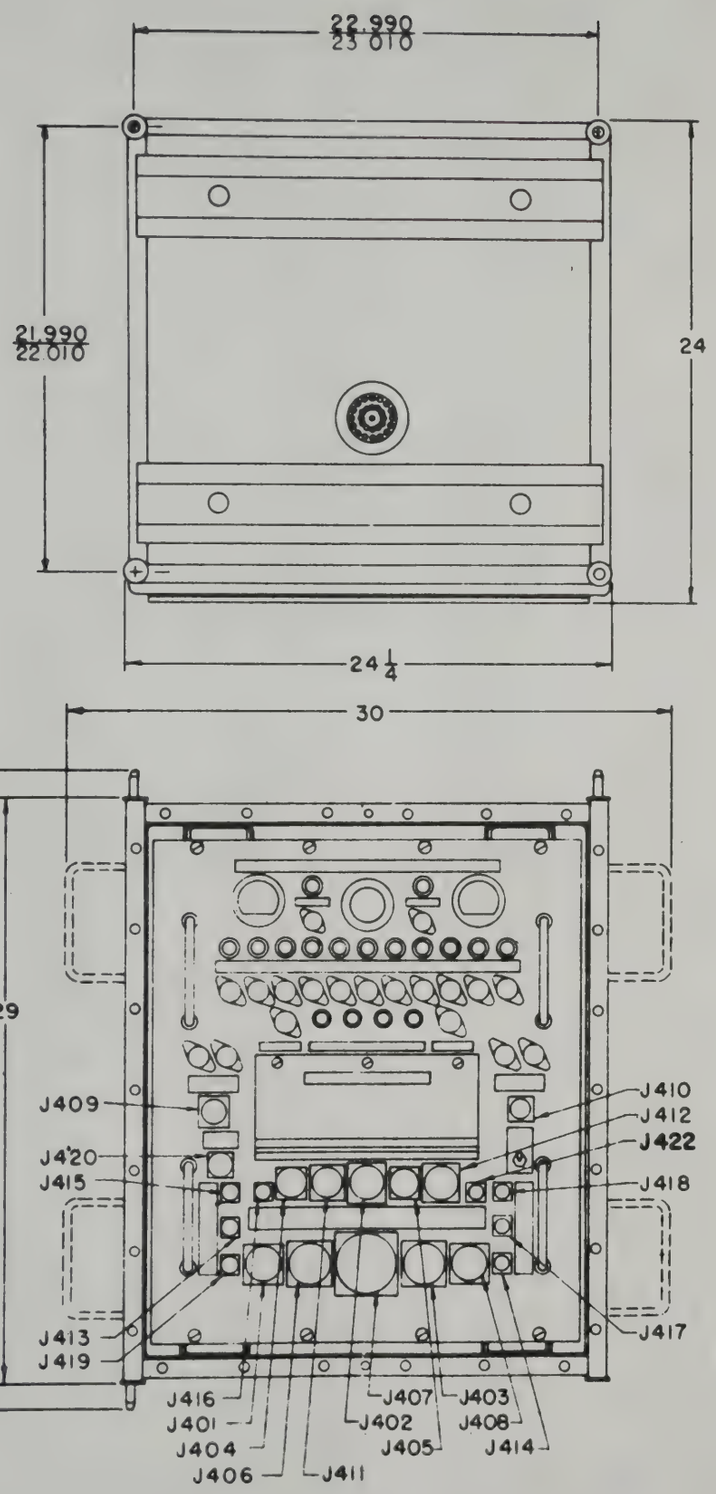

FRONT VIEW
COVER REMOVED

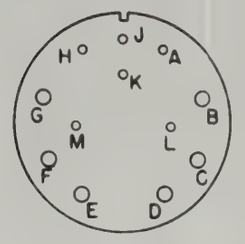

J402
TYPE AN3102C-28-9P

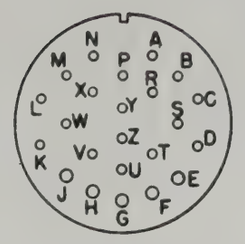

J406
AN3102C-32-13P

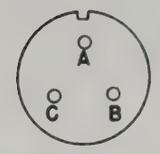

J411
AN3102C-20-6P

J407
CANNON ELECTRIC CO
TYPE AK-G52-32SL

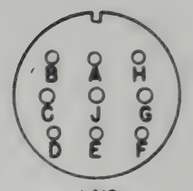

J412
AN3102C-28-1S

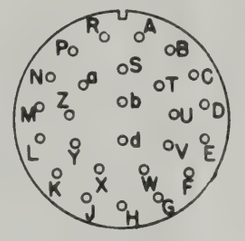

J408
AN3102C-28-12P

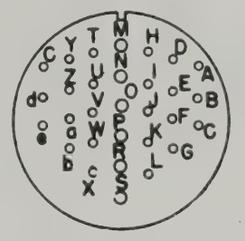

J403
AN3102C-32-8P

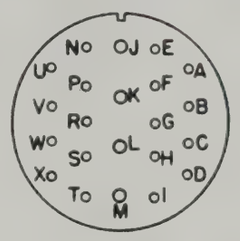

J401
AN3102C-28-11P

J404 & J405
AN3102A-24-9P

J420
AN3102C-16S-1S

J422
AN3102C-14S-1P

HEAT DISSIPATION 350 WATTS
AMBIENT TEMPERATURE DESIGN -65F TO +135F OPERATE
-65F TO +165F STORAGE
WEIGHT OF UNIT (UNCRATED) 223 LBS.
WEIGHT OF UNIT (CRATED) 290 LBS
CUBE OF UNIT (CRATED) 13.9 CU FT.
DIMENSIONS OF UNIT (CRATED) 33"X27"X27"

TUBE
COMPLEMENT
(3) 0A2WA
(6) 5R4WGB
(2) 6AH6
(3) 6Y6G
(3) 6080WA

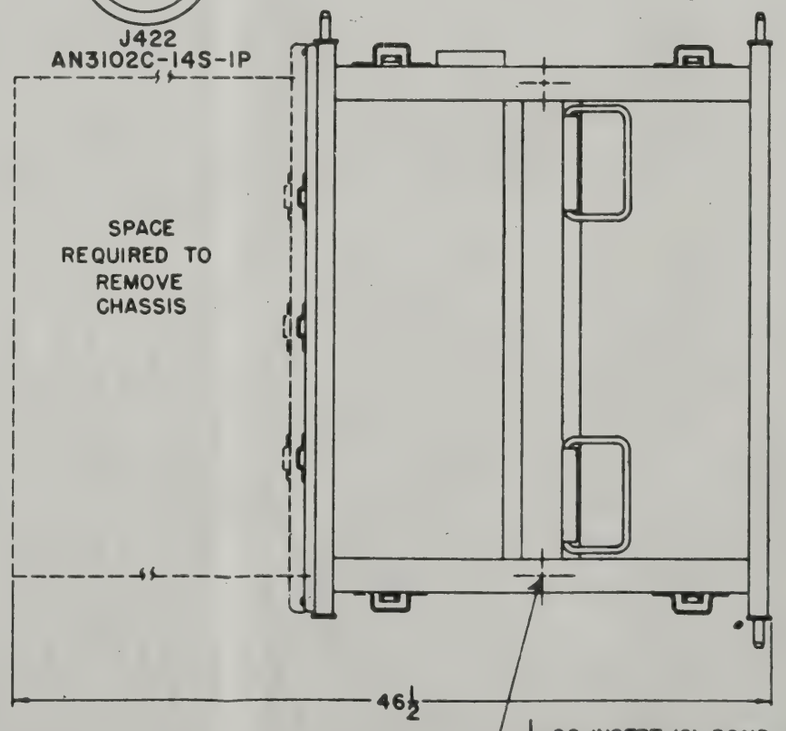

Figure 3–26. Power Supply PP-674A/TPS-1D: Outline Drawing

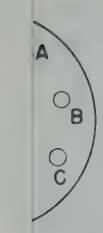

8 -9P

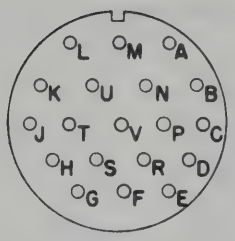

J 702 & J 753
AN - 3102C - 22 - 14P

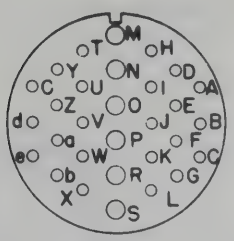

J 751
AN-302C-32-8P

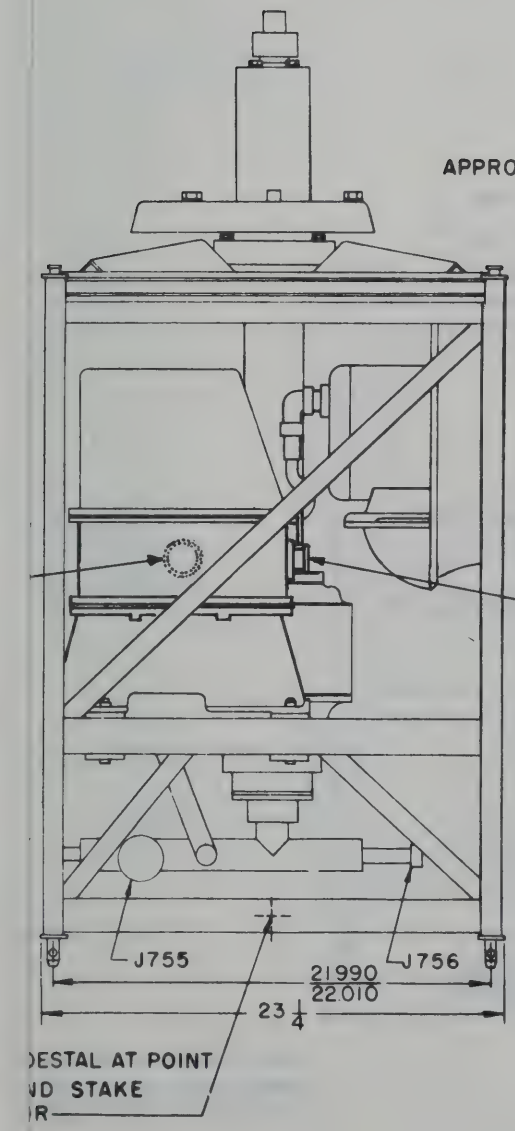

HEAT DISSIPATION 350 WATTS (INCLUDING FAN MOTOR)
AMBIENT TEMPERATURE DESIGN −65°F TO +135°F (OPERATE)
−65°F TO +165°F (STORAGE)
APPROX. WEIGHT OF UNIT (UNCRATED) 347 LBS
WEIGHT OF UNIT (CRATED) 412 LBS.
CUBE OF UNIT (CRATED) 18.4 CU. FT.
DIMENSIONS OF UNIT (CRATED) 38" X 28" X 30"

TUBE COMPLEMENT

(2) 5684/C3J/A
(2) 5726
(1) 5727
(1) 5751

Figure 3–27. Antenna Base AB-498/TPS-1G: Outline Drawing

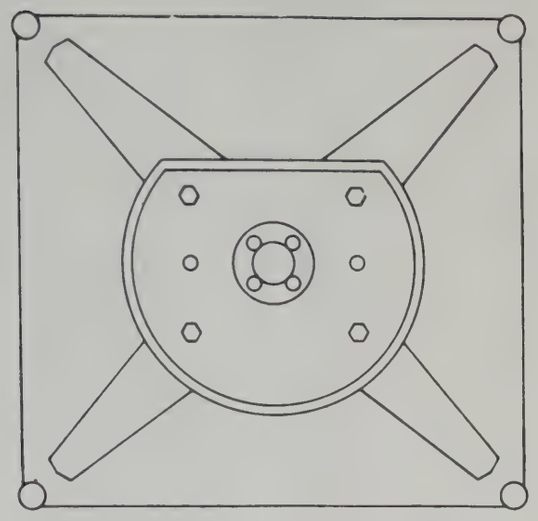

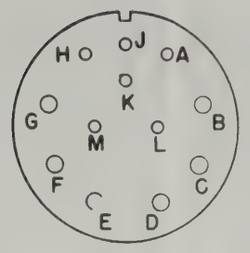

J701
AN-3102C-28-9P

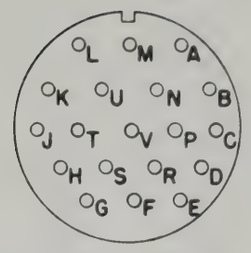

J 702 & J 753
AN-3102C-22-14P

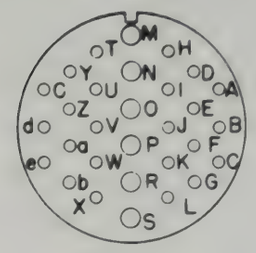

J 751
AN-302C-32-8P

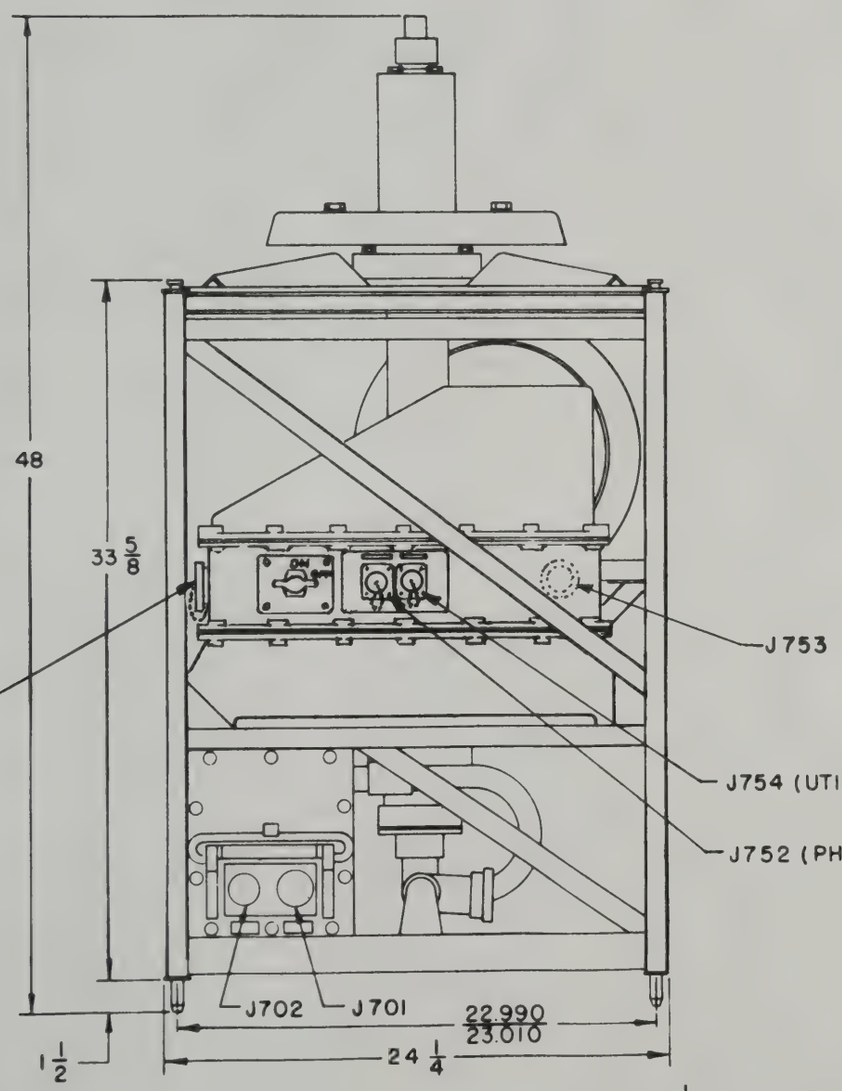

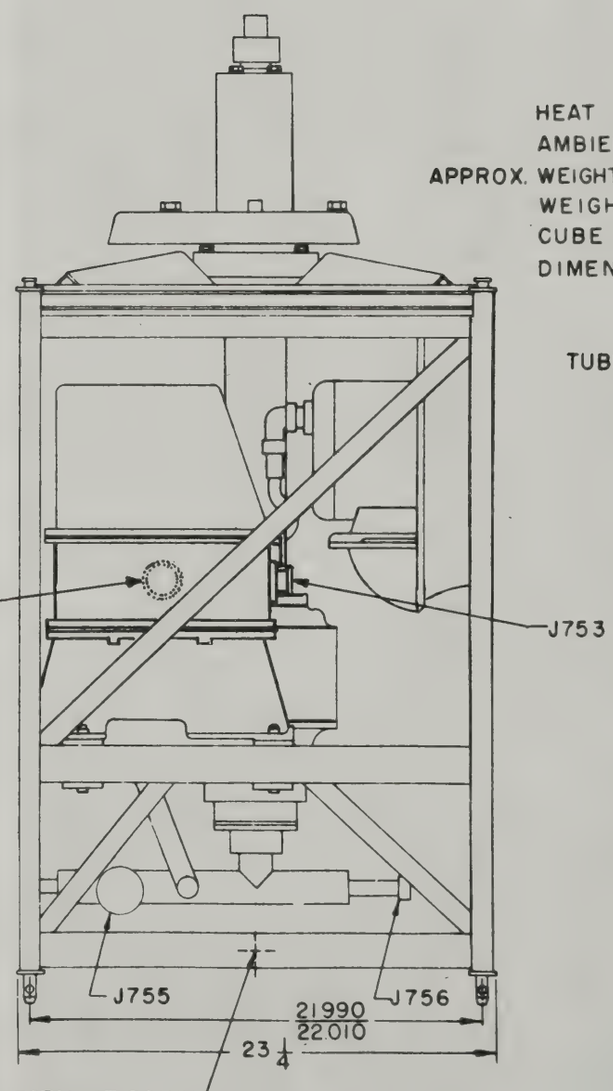

1/4-20 INSERT(I)-BOND PEDESTAL AT POINT SHOWN. BOND AND GROUND STAKE SUPPLIED BY CONTRACTOR

HEAT DISSIPATION 350 WATTS (INCLUDING FAN MOTOR)
AMBIENT TEMPERATURE DESIGN −65°F TO +135°F (OPERATE)
−65°F TO +165°F (STORAGE)
APPROX. WEIGHT OF UNIT (UNCRATED) 347 LBS
WEIGHT OF UNIT (CRATED) 412 LBS.
CUBE OF UNIT (CRATED) 18.4 CU. FT.
DIMENSIONS OF UNIT (CRATED) 38" X 28" X 30"

TUBE COMPLEMENT

(2) 5684/C3J/A
(2) 5726
(1) 5727
(1) 5751

Figure 3–27. Antenna Base AB-498/TPS-1G: Outline Drawing

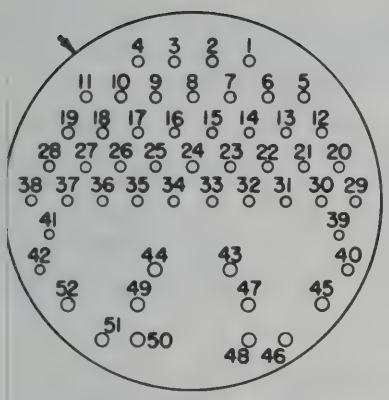

J601
CANNON ELECTRIC CO
TYPE AK-G52-32 SL

HEAT DISSIPATION 150 WATTS
AMBIENT TEMPERATURE DESIGN $-65^{\circ}F$ TO $+135^{\circ}F$ OPERATE
$-65^{\circ}F$ TO $+165^{\circ}F$ STORAGE
APPROX. WEIGHT OF UNIT (UNCRATED) 224 LBS.
" WEIGHT OF UNIT (CRATED) 284 LBS.
" CUBE OF UNIT (CRATED) 15.9 CU. FT.
" DIMENSIONS OF UNIT (CRATED) 33"X27"X31"

TUBE COMPLEMENT

(1) 1B3GT	(1) 6L6WGB
(1) 5CP1A	(1) 10KP7
(1) 6AG7	(3) 5726
(3) 6AH6	(2) 5751
(2) 6AU6WA	(11) 5814A

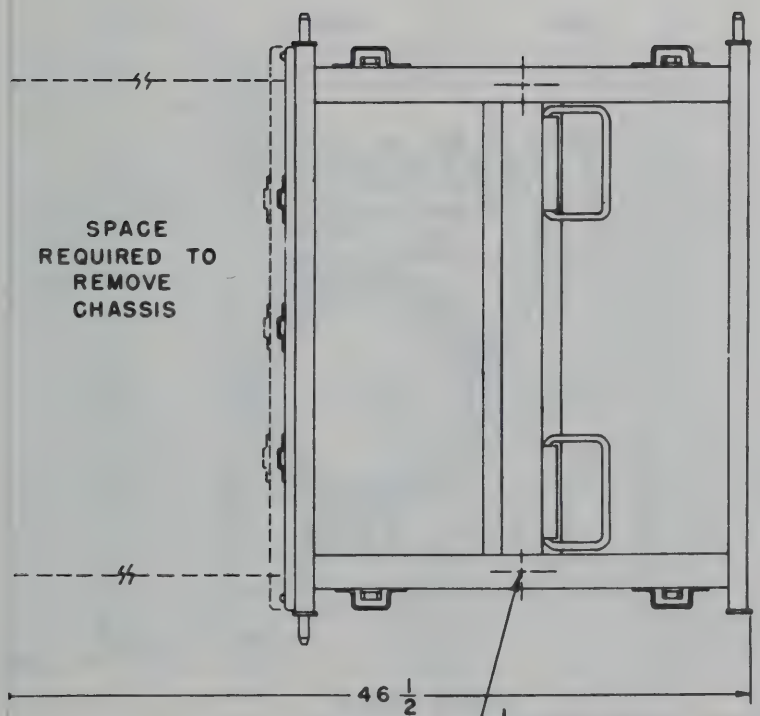

Figure 3–28. Azimuth and Range Indicator IP-141A/TPS-1D: Outline Drawing

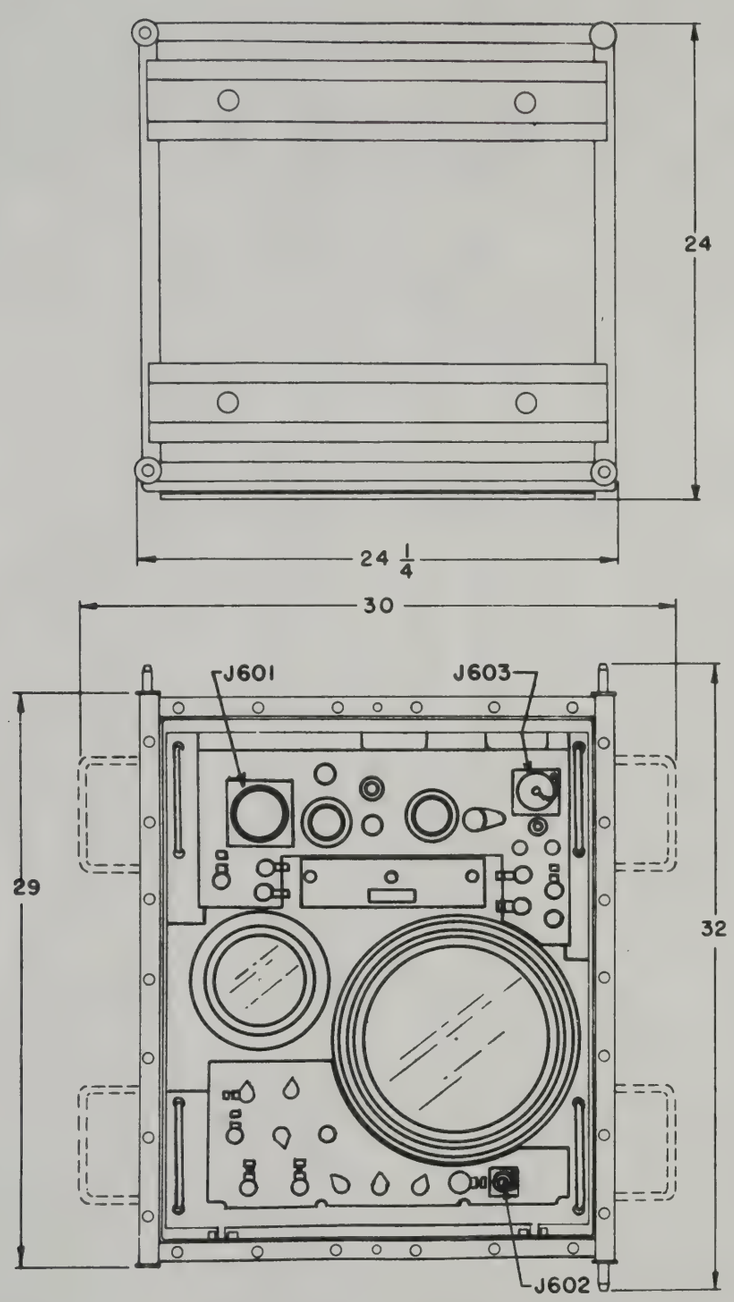

FRONT VIEW
COVER REMOVED

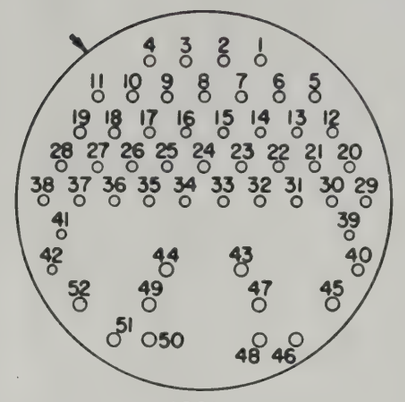

J601
CANNON ELECTRIC CO
TYPE AK-G52-32 SL

HEAT DISSIPATION 150 WATTS
AMBIENT TEMPERATURE DESIGN -65°F TO+135°F OPERATE
-65°F TO+165°F STORAGE
APPROX. WEIGHT OF UNIT (UNCRATED) 224 LBS.
" WEIGHT OF UNIT (CRATED) 284 LBS.
" CUBE OF UNIT (CRATED) 15.9 CU. FT.
" DIMENSIONS OF UNIT (CRATED) 33"X27"X31"

TUBE COMPLEMENT

(1) 1B3GT	(1) 6L6WGB
(1) 5CP1A	(1) 10KP7
(1) 6AG7	(3) 5726
(3) 6AH6	(2) 5751
(2) 6AU6WA	(11) 5814A

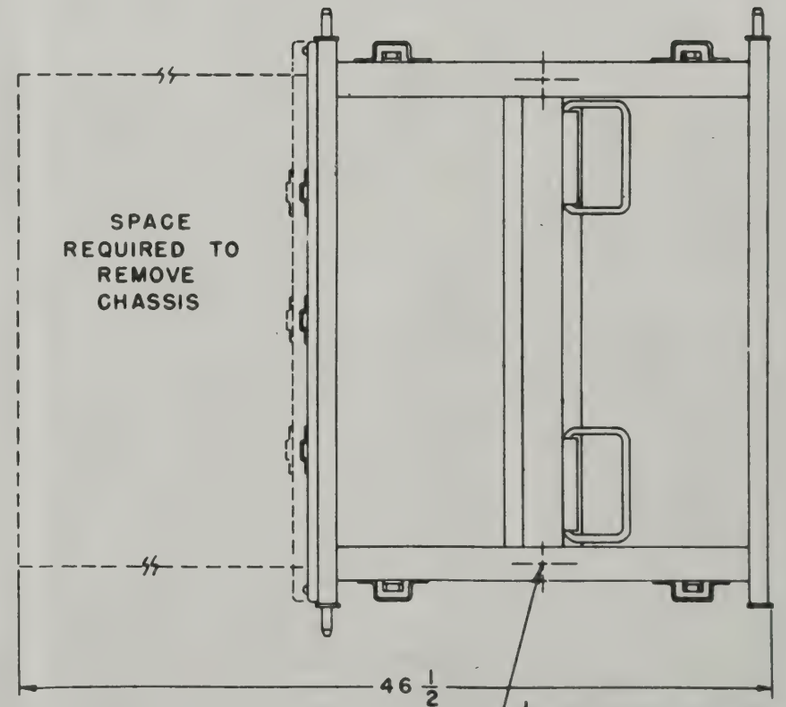

1/4-20 INSERT (2) – BOND CASES AT POINTS SHOWN BONDING AND GROUND STAKE SUPPLIED BY CONTRACTOR.

Figure 3—28. Azimuth and Range Indicator IP-141A/TPS-1D: Outline Drawing

_____	260 LB.
) OR CY-2078/TPS-IG	178 LB.
G_____	314 LB
_____	492LB
) OR CY-2078/TPS-IG	290 LB.
G_____	500 LB.
_____	790 LB.
ORR. TO -54°C (-65°F)	2200LB

TE: RE CASES
ACKED IN CASES, AS FOLLOWS:
N CASE CY-2071/TPS-IG OR
-2078/TPS-IG.
IN CASE CY-2072/TPS-IG

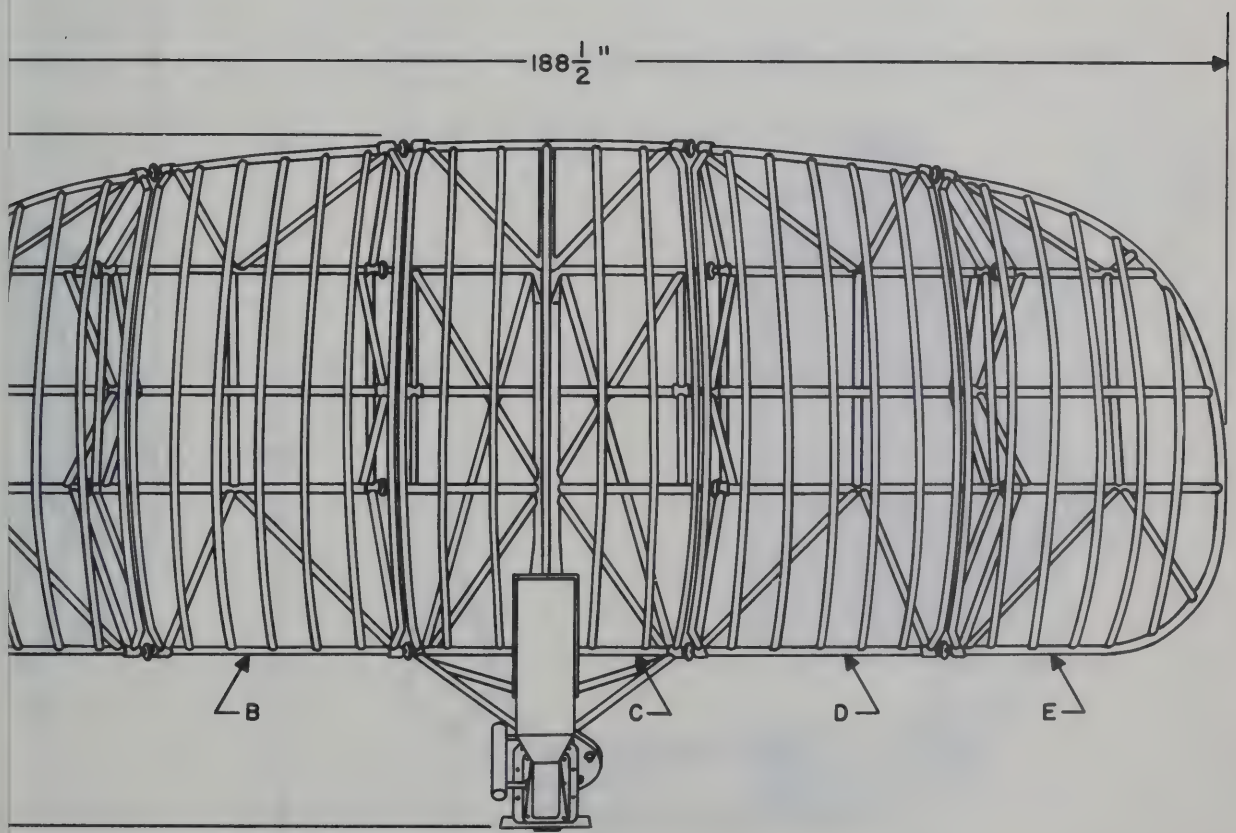

Figure 3–29. Antenna AS-673/TPS-1E: Outline Drawing

WEIGHT OF ANTENNA (UNCRATED, W/O CASES)	260 LB.
WEIGHT OF ANTENNA (UNCRATED, W/CASES)	
IN CASE CY-2071/TPS-1G OR CY-2078/TPS-1G	178 LB.
IN CASE CY-2072/TPS-1G	314 LB
TOTAL	492LB
WEIGHT OF ANTENNA (CRATED, W/CASES)	
IN CASE CY-2071/TPS-1G OR CY-2078/TPS-1G	290 LB.
IN CASE CY-2072/TPS-1G	500 LB.
TOTAL	790 LB.
WIND LOAD AT 90 MPH (CORR. TO -54°C (-65°F)	2200LB

NOTE: RE CASES
ANTENNA UNIT PACKED IN CASES, AS FOLLOWS:
SECTIONS B&D IN CASE CY-2071/TPS-1G OR CY-2078/TPS-1G.
SECTIONS A,C,&E IN CASE CY-2072/TPS-1G

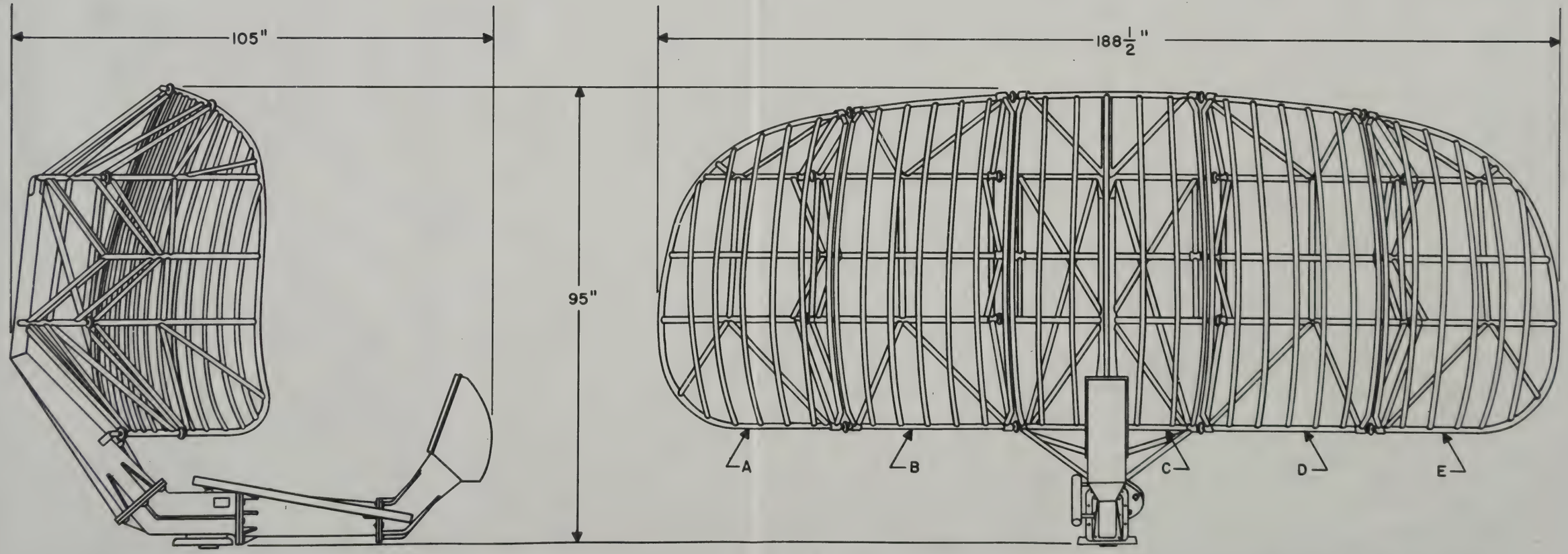

Figure 3—29. Antenna AS-673/TPS-1E: Outline Drawing

CASE CY-1060/TPS-1D
WEIGHT OF CASE (UNCRATED) 106LBS.
WEIGHT OF CONTENTS (UNCRATED) 237LBS.
WEIGHT OF CASE AND CONTENTS (CRATED) 405LBS.

CASE CY-1297/TPS-1D
WEIGHT OF CASE (UNCRATED) 106LBS.
WEIGHT OF CONTENTS (UNCRATED) 76LBS.
WEIGHT OF CASE AND CONTENTS (CRATED) 224LBS.

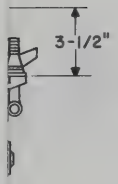

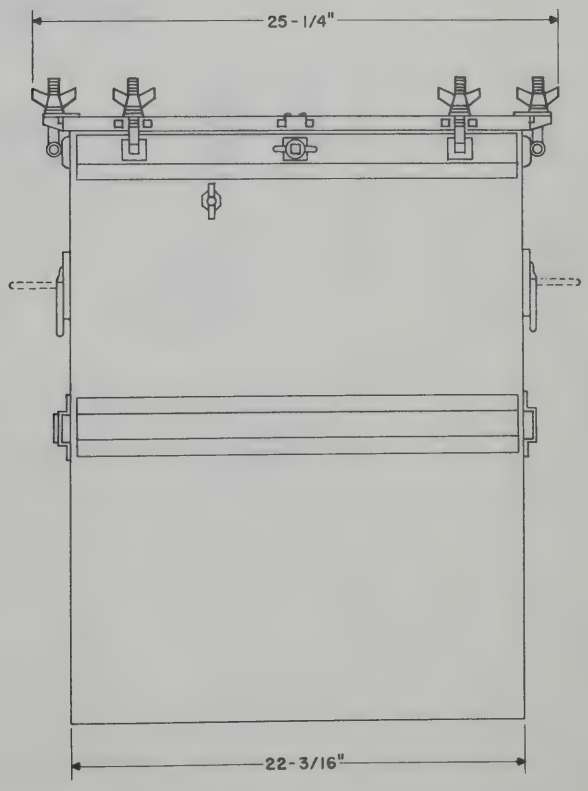

Figure 3—30. Case CY-1060/TPS-1D and Case CY-1297/TPS-1D: Outline Drawing

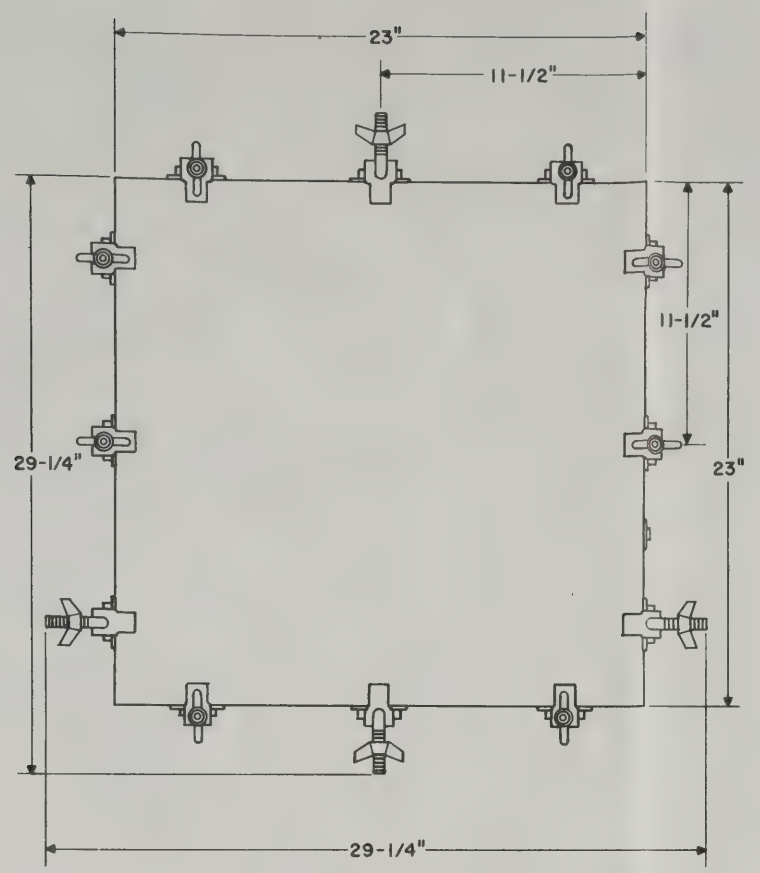

CASE CY-1060/TPS-1D
WEIGHT OF CASE (UNCRATED) 106LBS.
WEIGHT OF CONTENTS (UNCRATED) 237LBS.
WEIGHT OF CASE AND CONTENTS (CRATED) 405LBS.

CASE CY-1297/TPS-1D
WEIGHT OF CASE (UNCRATED) 106LBS.
WEIGHT OF CONTENTS (UNCRATED) 76LBS.
WEIGHT OF CASE AND CONTENTS (CRATED) 224LBS.

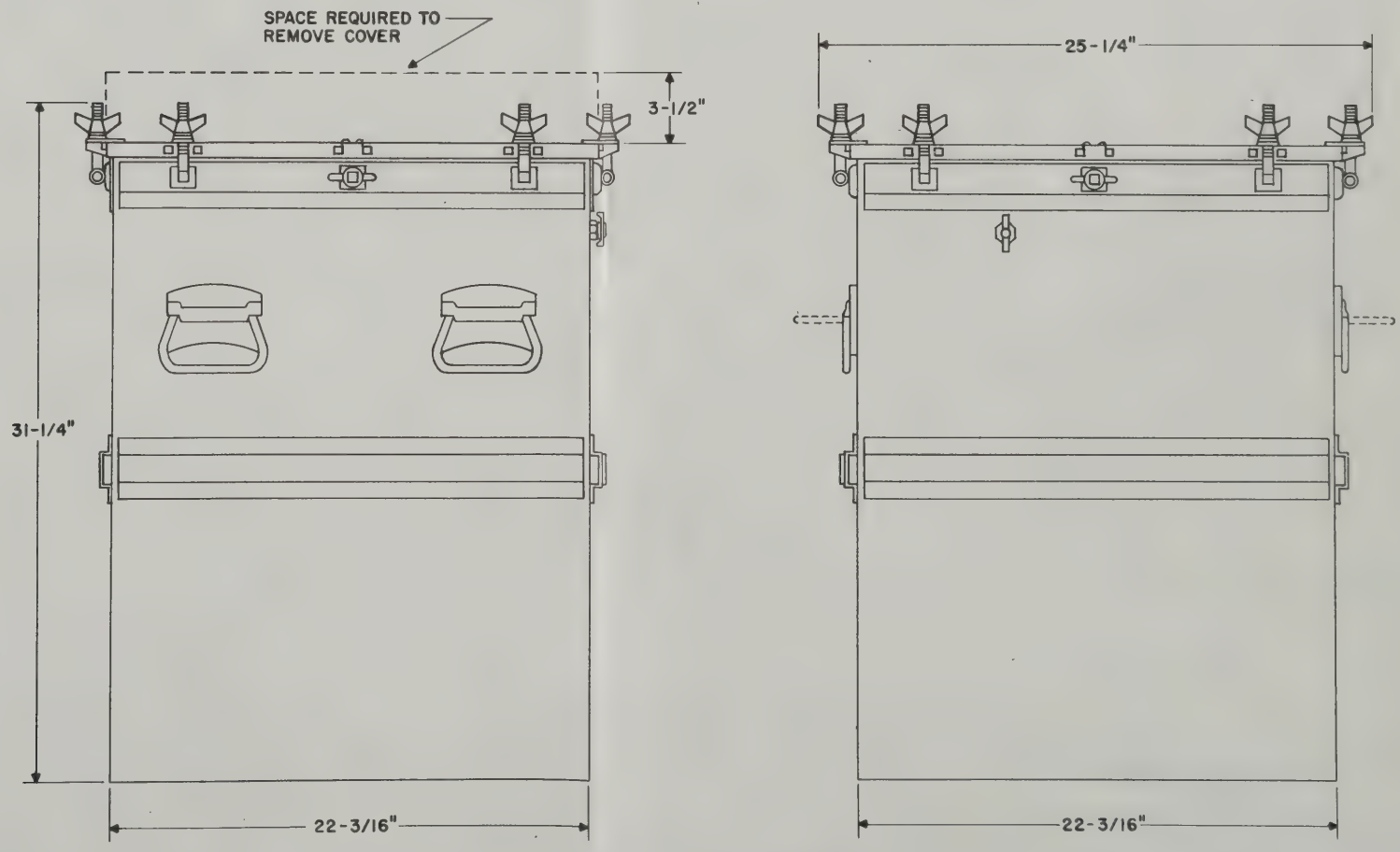

Figure 3—30. Case CY-1060/TPS-1D and Case CY-1297/TPS-1D: Outline Drawing

WEIGHT OF CASE (UNCRATED) 85 LBS.
WEIGHT OF CONTENTS (UNCRATED) 93 LBS.
WEIGHT OF CASE AND CONTENTS (CRATED FOR DOMESTIC SHIPMENT) 290 LBS.
WEIGHT OF CASE AND CONTENTS (CRATED FOR FOREIGN SHIPMENT) 390 LBS.

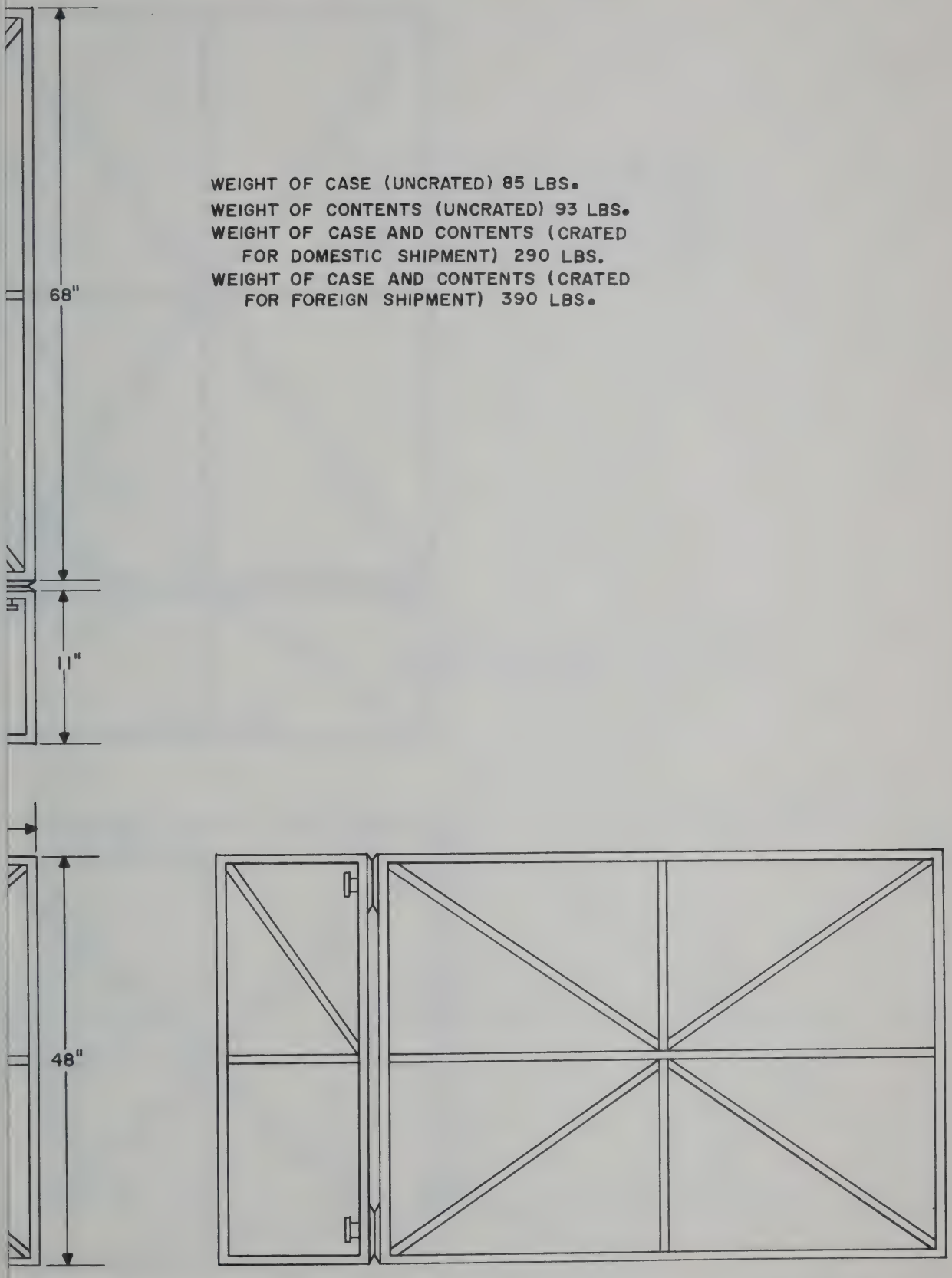

Figure 3—31. Case CY-2071/TPS-1G: Outline Drawing

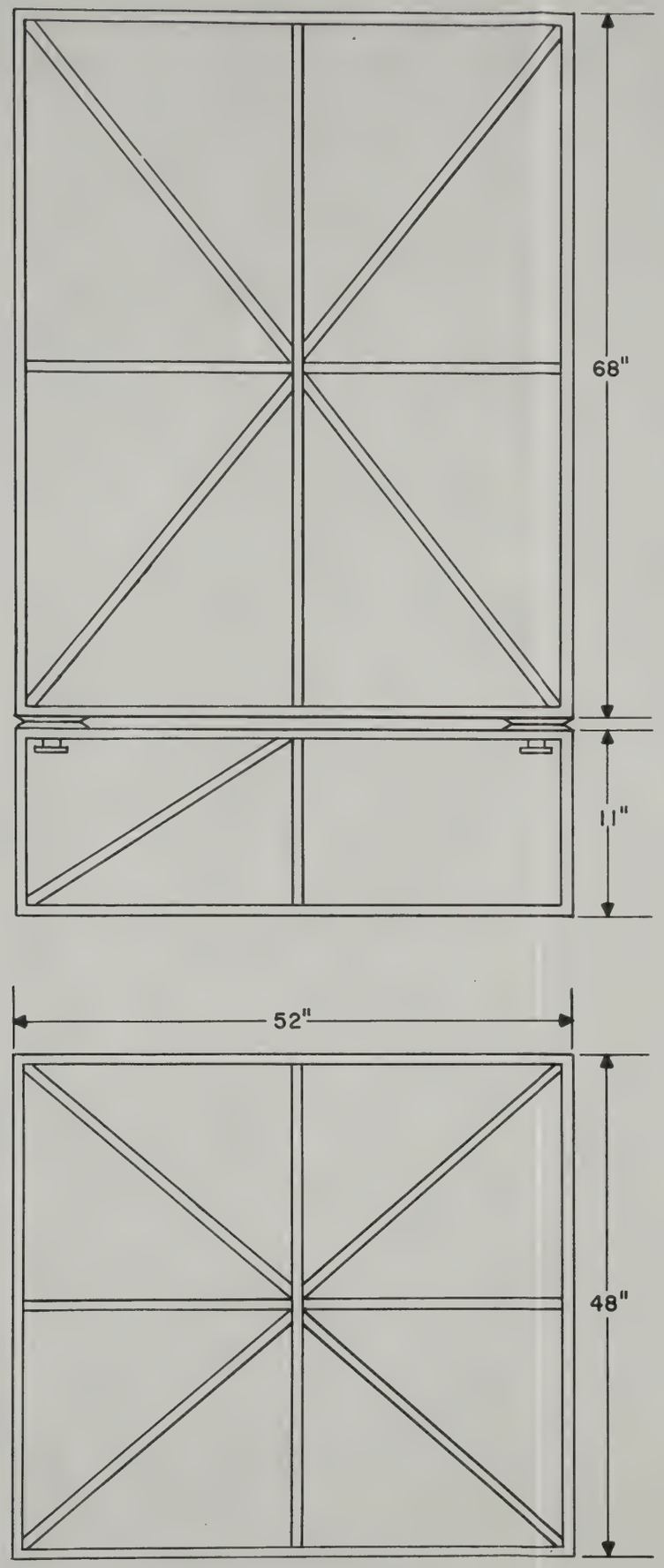

WEIGHT OF CASE (UNCRATED) 85 LBS.
WEIGHT OF CONTENTS (UNCRATED) 93 LBS.
WEIGHT OF CASE AND CONTENTS (CRATED FOR DOMESTIC SHIPMENT) 290 LBS.
WEIGHT OF CASE AND CONTENTS (CRATED FOR FOREIGN SHIPMENT) 390 LBS.

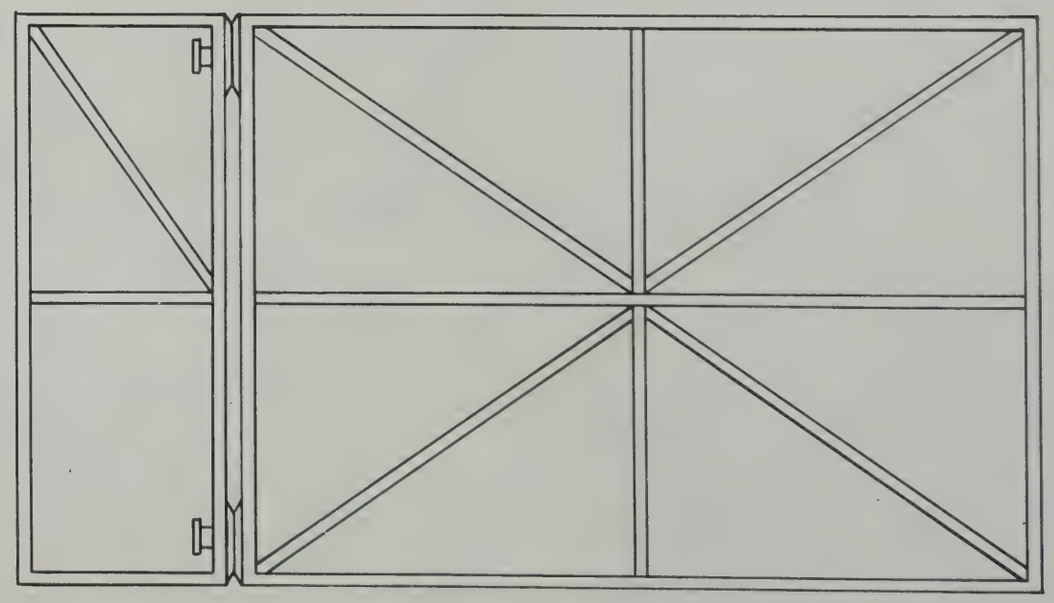

Figure 3—31. Case CY-2071/TPS-1G: Outline Drawing

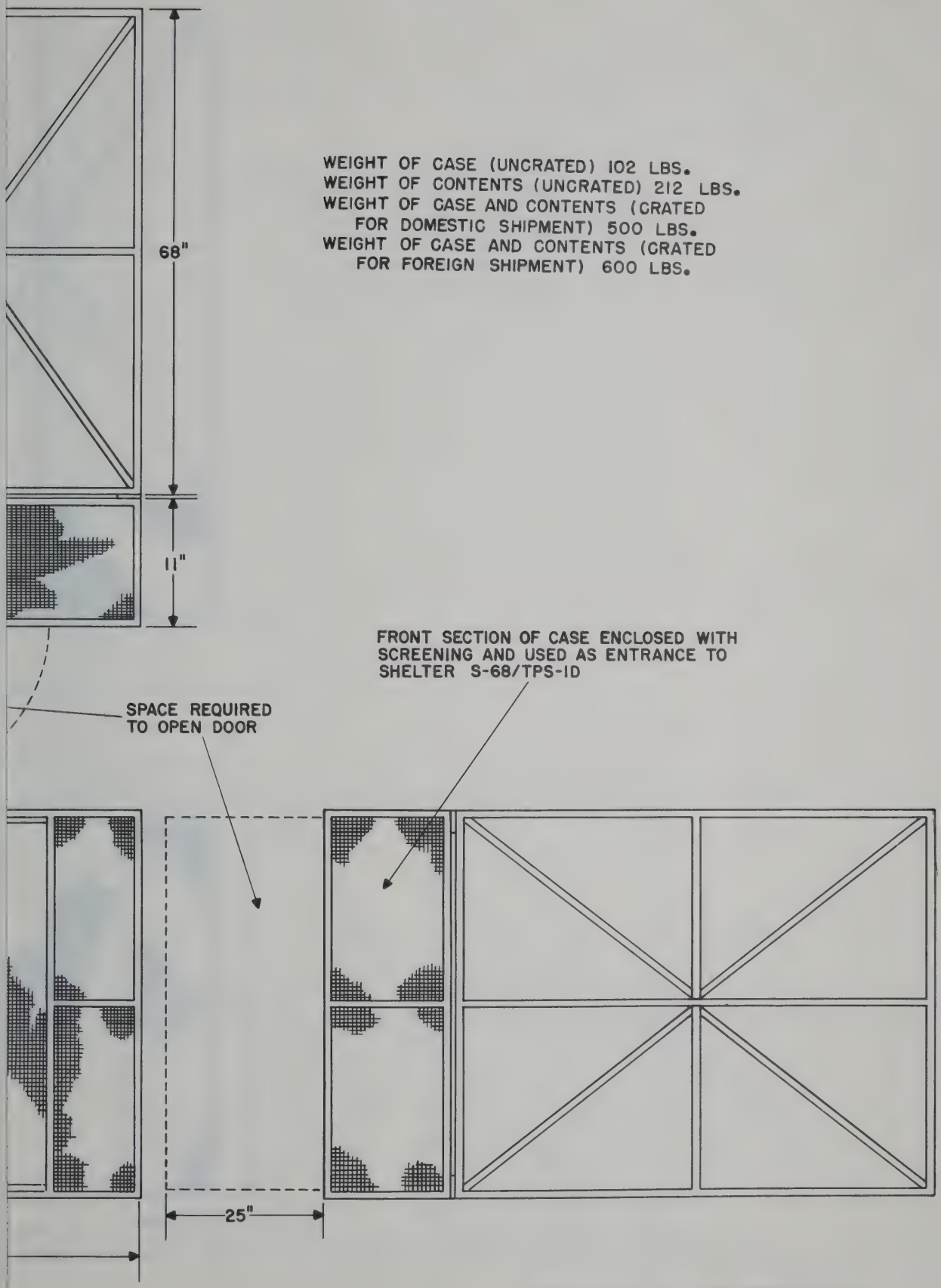
68"
11"
WEIGHT OF CASE (UNCRATED) 102 LBS.
WEIGHT OF CONTENTS (UNCRATED) 212 LBS.
WEIGHT OF CASE AND CONTENTS (CRATED FOR DOMESTIC SHIPMENT) 500 LBS.
WEIGHT OF CASE AND CONTENTS (CRATED FOR FOREIGN SHIPMENT) 600 LBS.
FRONT SECTION OF CASE ENCLOSED WITH SCREENING AND USED AS ENTRANCE TO SHELTER S-68/TPS-1D
SPACE REQUIRED TO OPEN DOOR
25"

Figure 3–32. Case CY-2078/TPS-1G: Outline Drawing

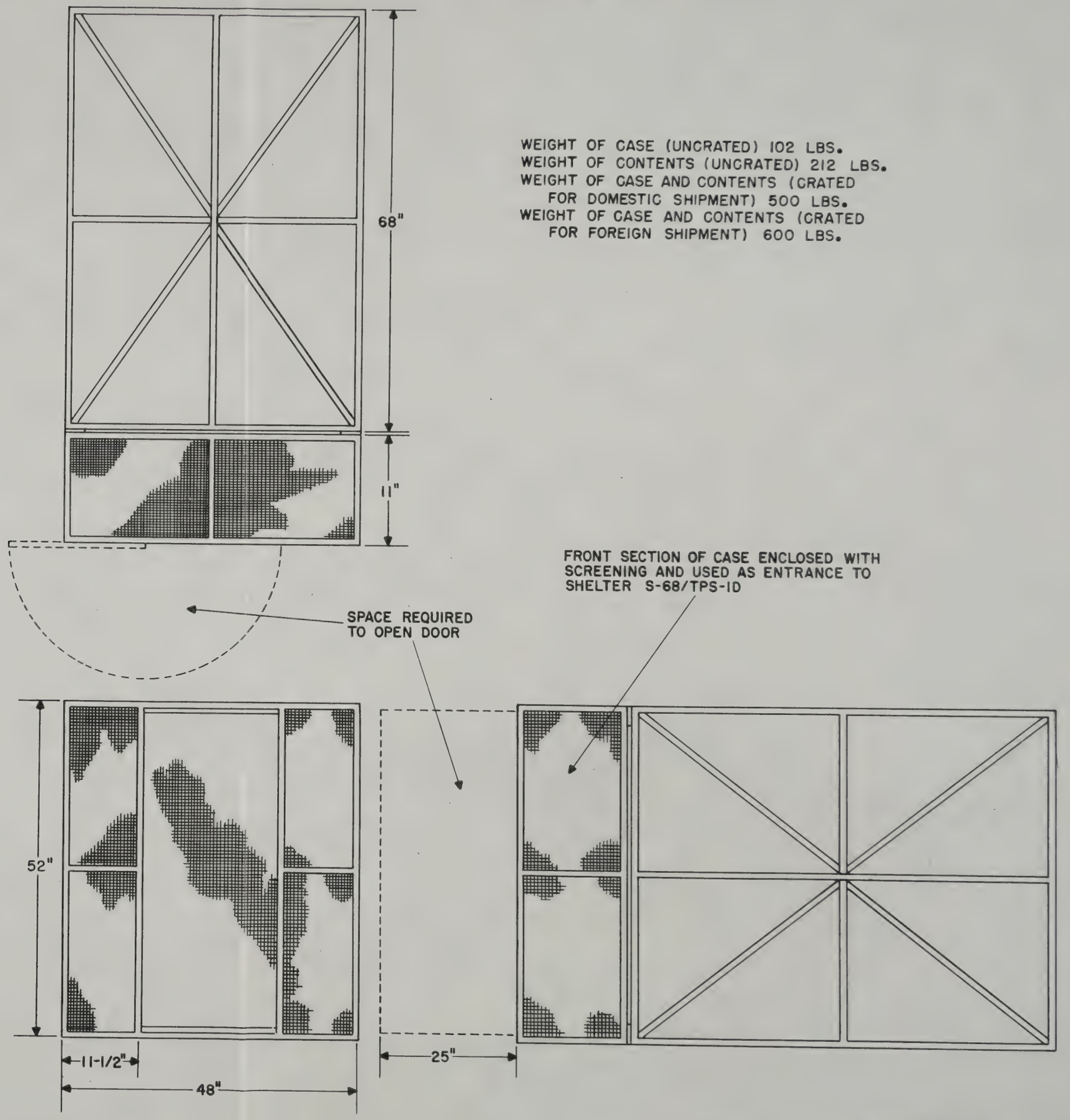

WEIGHT OF CASE (UNCRATED) 102 LBS.
WEIGHT OF CONTENTS (UNCRATED) 212 LBS.
WEIGHT OF CASE AND CONTENTS (CRATED FOR DOMESTIC SHIPMENT) 500 LBS.
WEIGHT OF CASE AND CONTENTS (CRATED FOR FOREIGN SHIPMENT) 600 LBS.

Figure 3—32. Case CY-2078/TPS-1G: Outline Drawing

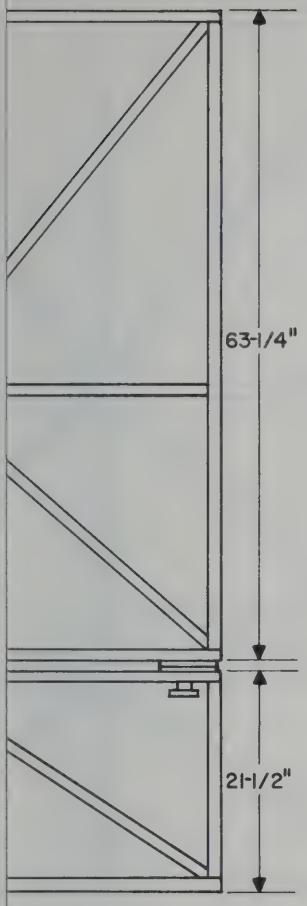

WEIGHT OF CASE (UNCRATED) 102 LBS.
WEIGHT OF CONTENTS (UNCRATED) 212 LBS.
WEIGHT OF CASE AND CONTENTS (CRATED FOR DOMESTIC SHIPMENT) 500 LBS.
WEIGHT OF CASE AND CONTENTS (CRATED FOR FOREIGN SHIPMENT) 600 LBS.

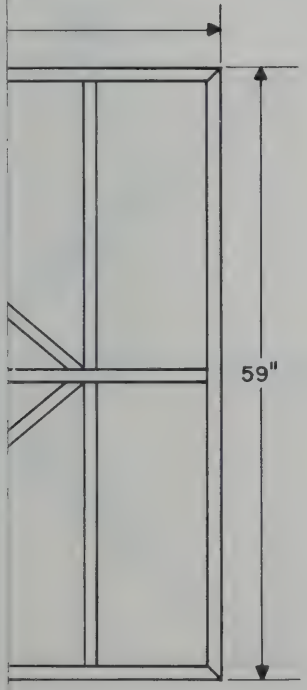

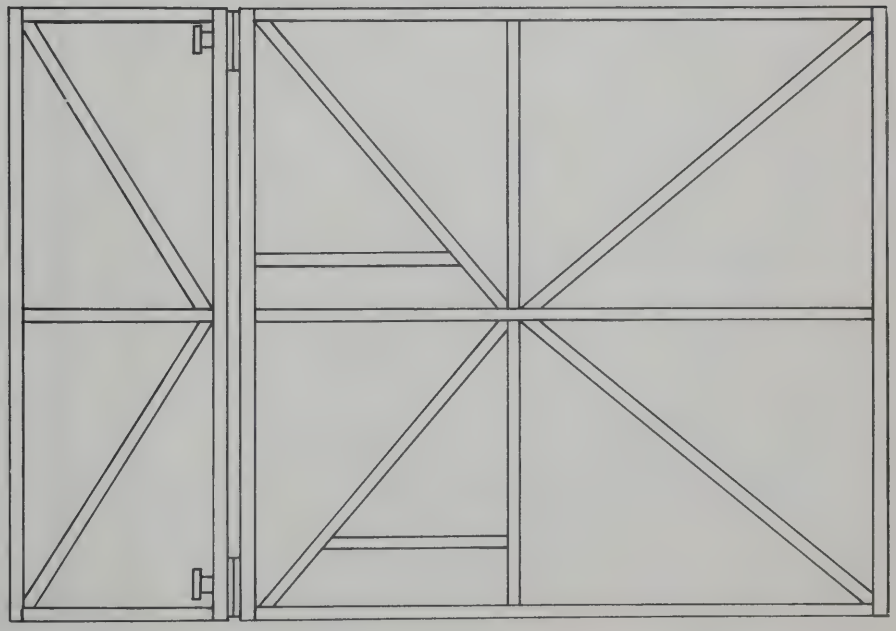

Figure 3—33. Case CY-2072/TPS-1G: Outline Drawing

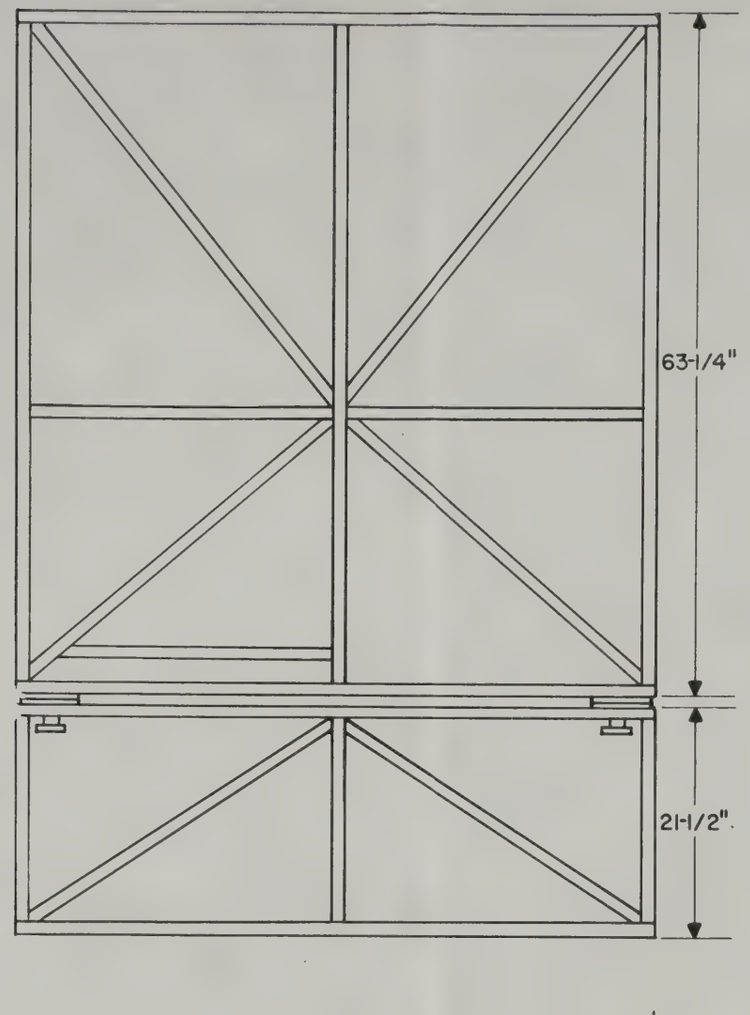

WEIGHT OF CASE (UNCRATED) 102 LBS.
WEIGHT OF CONTENTS (UNCRATED) 212 LBS.
WEIGHT OF CASE AND CONTENTS (CRATED FOR DOMESTIC SHIPMENT) 500 LBS.
WEIGHT OF CASE AND CONTENTS (CRATED FOR FOREIGN SHIPMENT) 600 LBS.

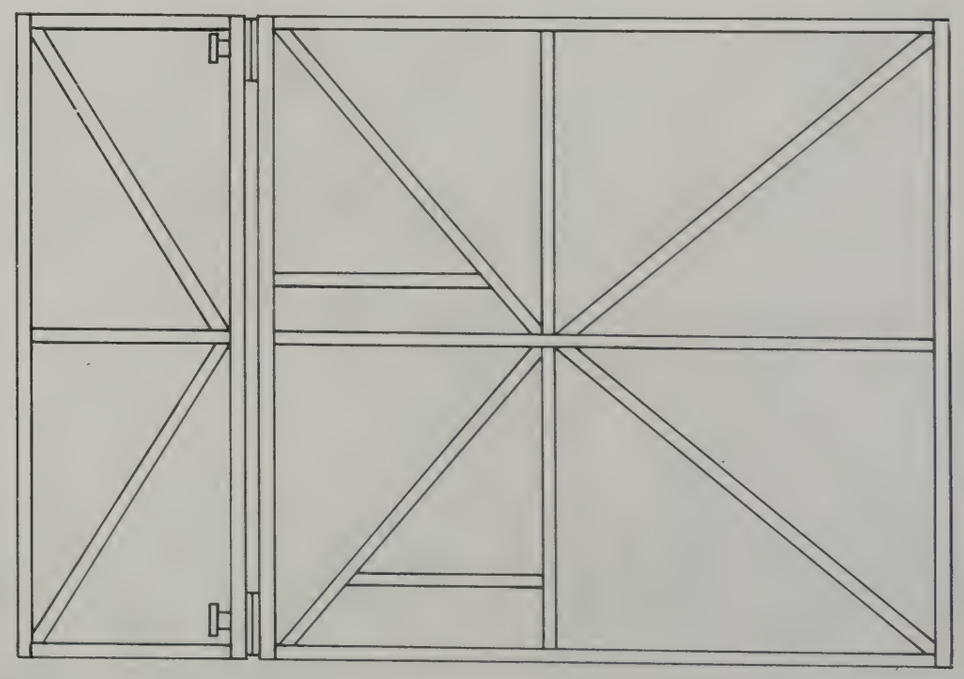

Figure 3—33. Case CY-2072/TPS-1G: Outline Drawing

HEAT DISSIPATION WATTS

AMBIENT TEMPERATURE DESIGN -65 F° TO +135° F (OPERATE)
-65 F° TO +165° F (STORAGE)

APPROX. WEIGHT OF UNIT (UNCRATED) 43 LBS.
" WEIGHT OF UNIT (CRATED) 63 LBS.
" CUBE OF UNIT (CRATED) 1.6 CU. FT.
" DIMENSIONS OF UNIT (CRATED) 18" X 13" X 12"

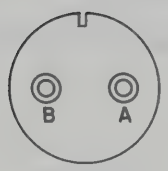

J2401 & J2402
AN3102C-24-9S

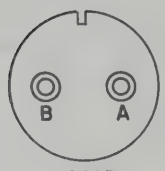

J2405
AN3102C-24-9P

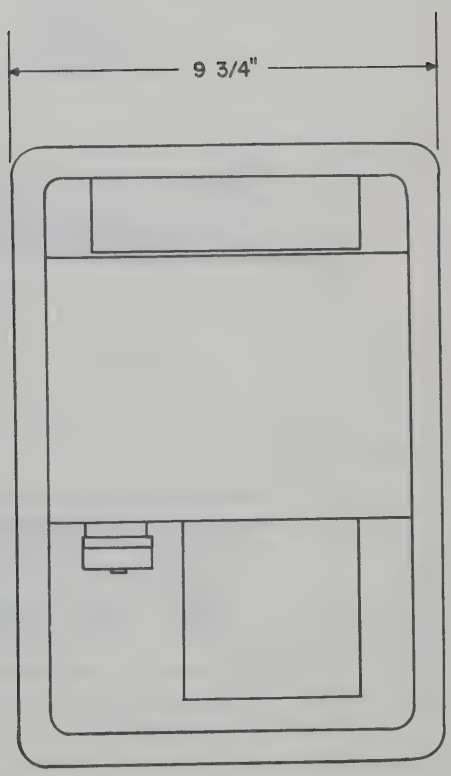

Figure 3—34. Variable Power Transformer TF-238/U: Outline Drawing

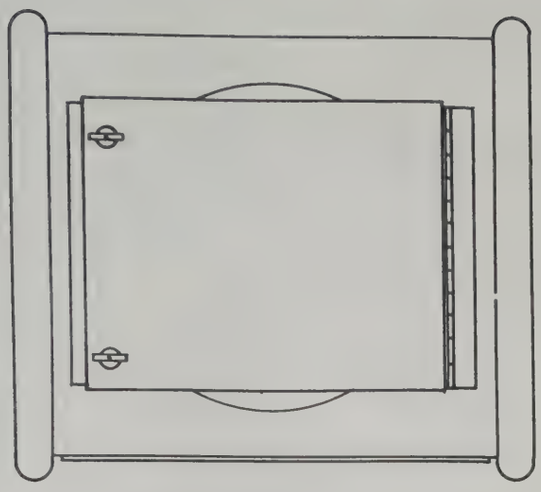

HEAT DISSIPATION WATTS

AMBIENT TEMPERATURE DESIGN -65 F° TO +135° F (OPERATE)
-65 F° TO +165° F (STORAGE)

APPROX. WEIGHT OF UNIT (UNCRATED) 43 LBS.
" WEIGHT OF UNIT (CRATED) 63 LBS.
" CUBE OF UNIT (CRATED) 1.6 CU. FT.
" DIMENSIONS OF UNIT (CRATED) 18" X 13" X 12"

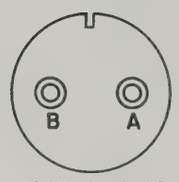

J2401 & J2402
AN3102C-24-9S

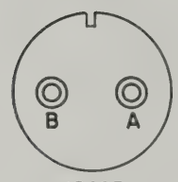

J2405
AN3102C-24-9P

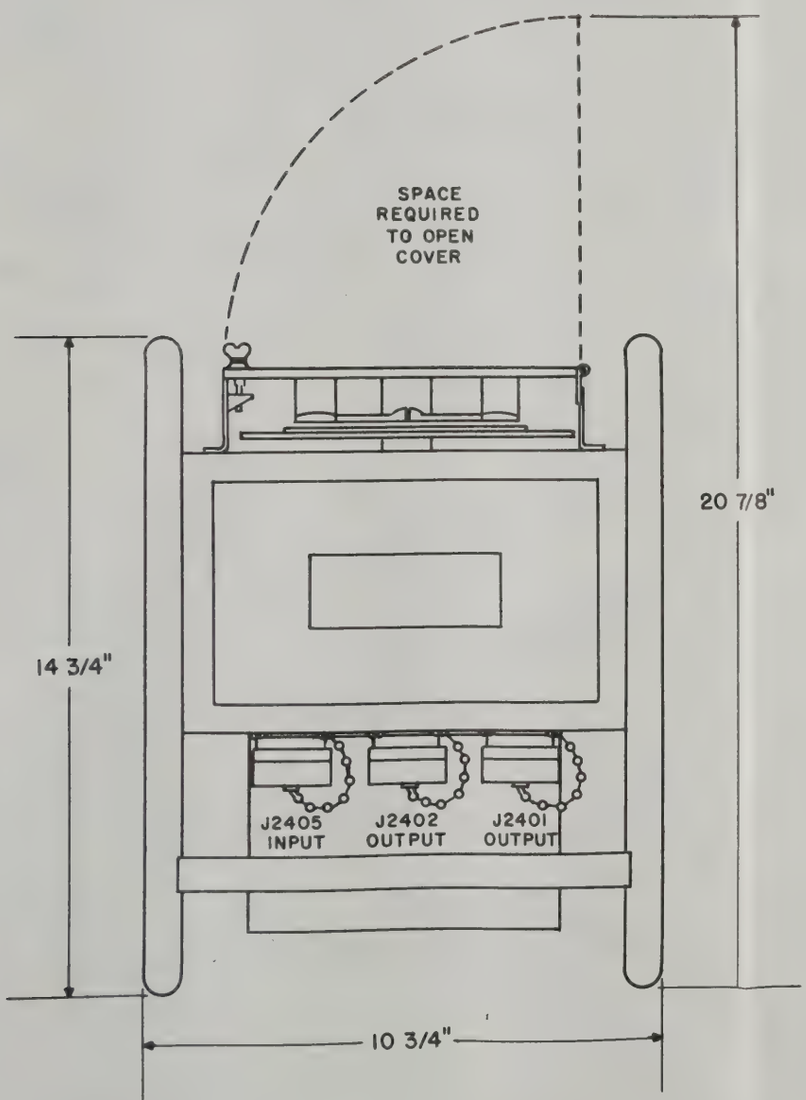

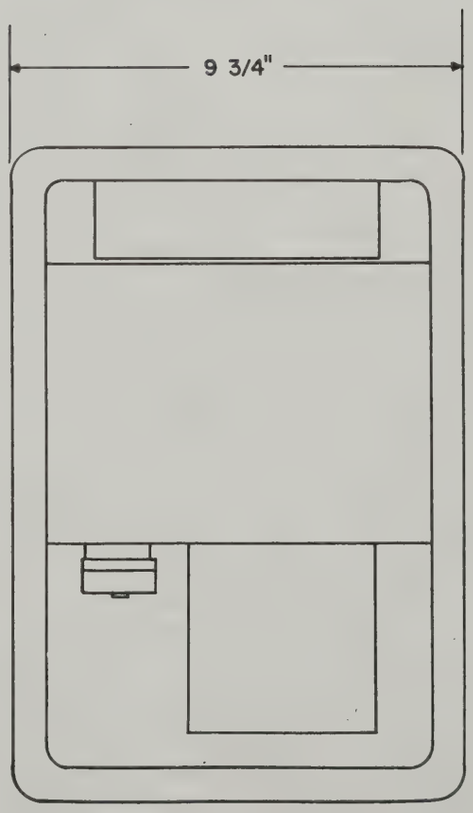

Figure 3—34. Variable Power Transformer TF-238/U: Outline Drawing

AMBIENT TEMPERATURE −65°F TO +135°F OPERATE
−65°F TO +165°F STORAGE

APPROX. WEIGHT OF UNIT (UNCRATED) 65 LB.
" WEIGHT OF UNIT (CRATED) 128 LB.
" CUBE OF UNIT (CRATED) 6.7 CU. FT.
" DIMENSIONS OF UNIT (CRATED) 24.5 x 21 x 22.5

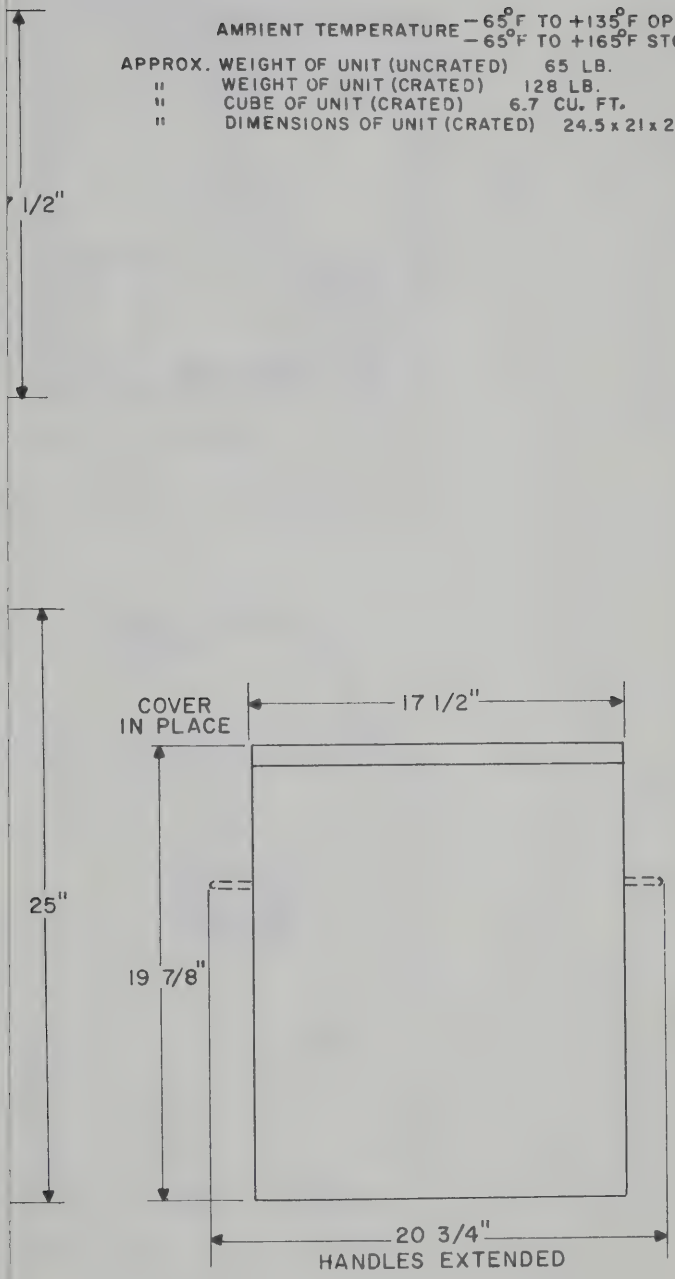

Figure 3–35. Tuned Cavity TS-172B/UP: Outline Drawing

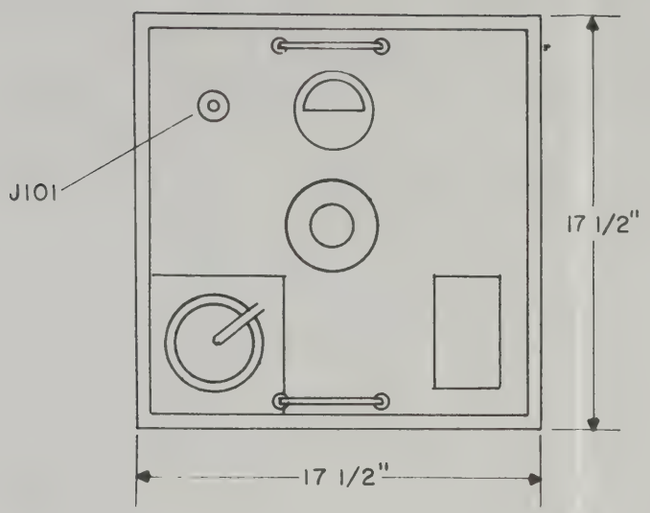

AMBIENT TEMPERATURE −65°F TO +135°F OPERATE
−65°F TO +165°F STORAGE

APPROX. WEIGHT OF UNIT (UNCRATED) 65 LB.
" WEIGHT OF UNIT (CRATED) 128 LB.
" CUBE OF UNIT (CRATED) 6.7 CU. FT.
" DIMENSIONS OF UNIT (CRATED) 24.5 x 21 x 22.5

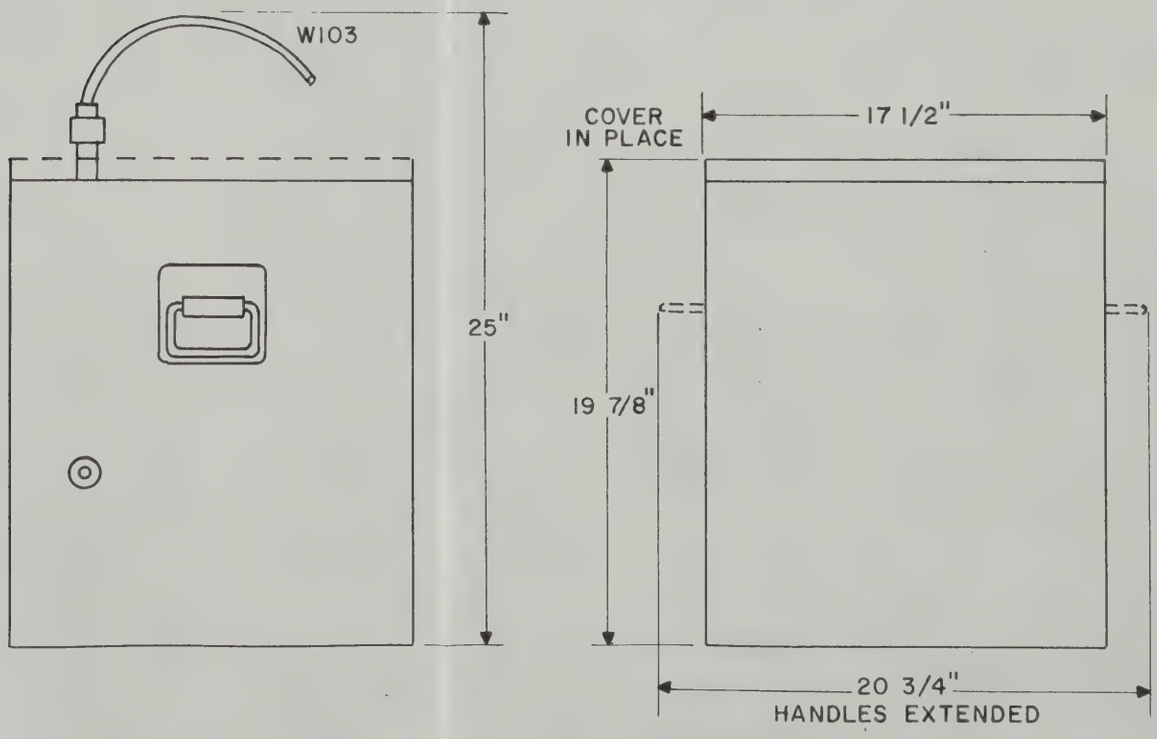

Figure 3—35. Tuned Cavity TS-172B/UP: Outline Drawing

T TEMPERATURE
-65°F TO +135°F OPERATE
-65°F TO +165°F STORAGE

OF UNIT (UNCRATED) 1 LB.

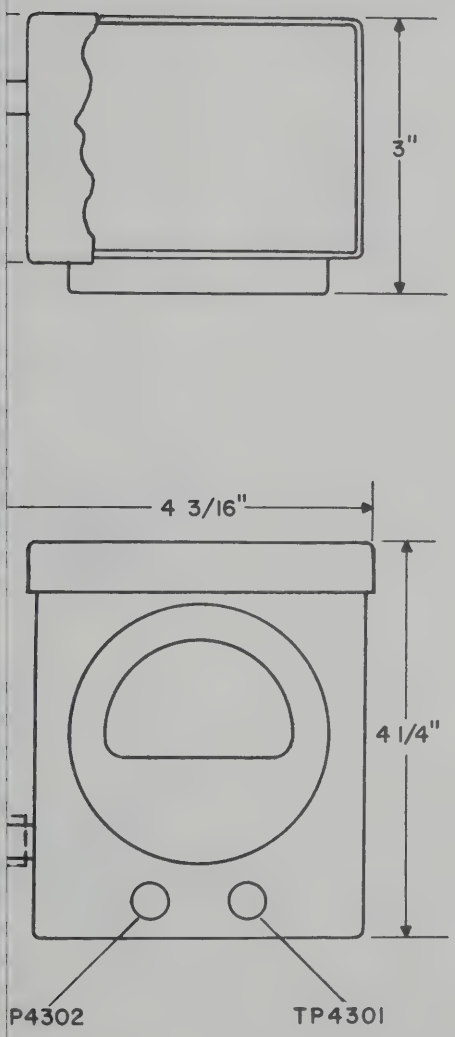

Figure 3—36. Signal Comparator Test Set TS-1002/TPS-1G: Outline Drawing

AMBIENT TEMPERATURE
-65°F TO +135°F OPERATE
-65°F TO +165°F STORAGE

WEIGHT OF UNIT (UNCRATED) 1 LB.

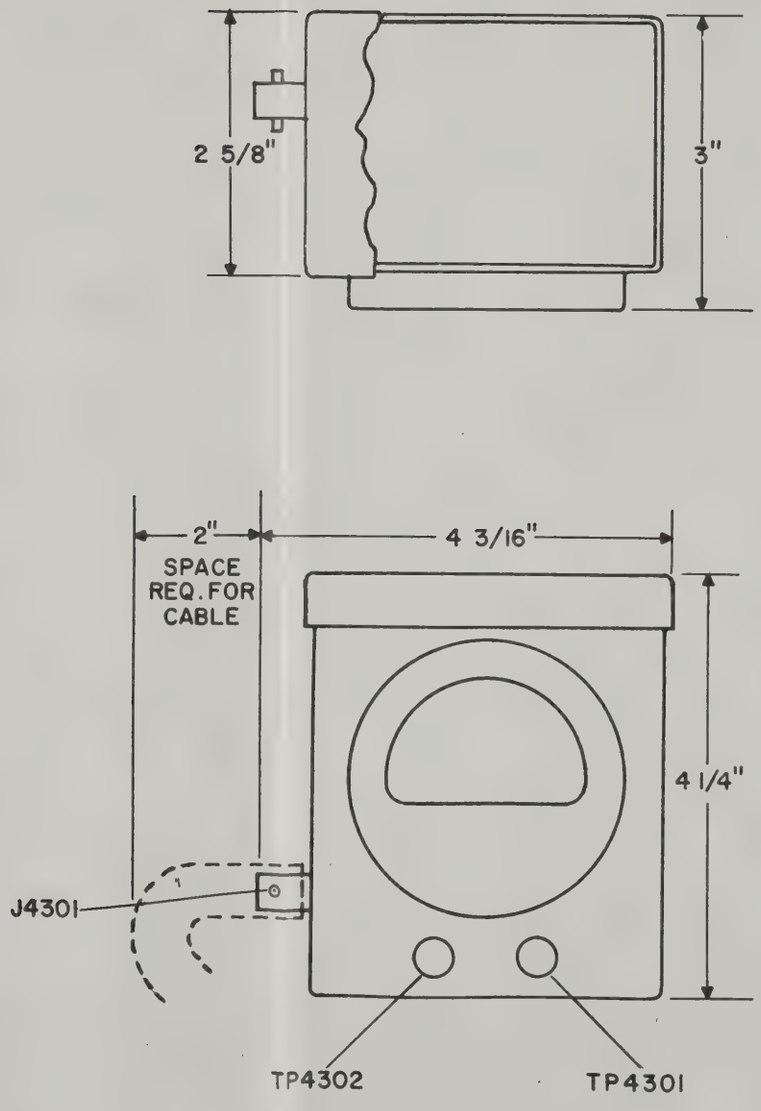

Figure 3–36. Signal Comparator Test Set TS-1002/TPS-1G: Outline Drawing

SECTION 4
OPERATION

1. GENERAL.

a. APPROACH TO OPERATION.

Although Radio Set AN/TPS-1G contains more operating controls than do average air-search radar systems having both PPI and A-scope displays, the basic operating functions are the same. The inclusion of MTI (moving target indication) accounts for the additional controls. When the equipment is set for normal radar operation, all MTI adjustments can be disregarded, and the controls in use and method of adjustment are similar to those of conventional air-search radar systems.

If the operator, experienced in conventional radar operation but inexperienced in MTI operation, first gains experience with normal radar operation, he will more quickly acquire the "feel" of the system controls. Also, by first gaining experience in operating the AN/TPS-1G as a normal radar, the operator will be more readily able to adopt the procedure for effective MTI results.

When the AN/TPS-1G is first put into operation at a particular location, it is well to become familiar with the radar patterns and targets of fixed objects as seen with normal radar operation. This will provide a partial standard for a daily check of system operation. Also, if difficulty is experienced with MTI during an emergency when a complete shut-down could not be tolerated, this knowledge of the standard fixed target pattern will ensure effective use in tracking objects with the system operating as a normal radar.

b. LIMITATIONS OF MTI.

The MTI system is capable of producing extremely effective results. By its use, the clutter of fixed images can be reduced to insignificance. Only moving targets are then seen, and these appear with nearly the same sensitivity and definition as when operating with normal radar presentation.

The MTI system has certain limitations with which the operator should be familiar. He should also be familiar with the limitations inherent in basic search radar systems so that he can evaluate the causes of undetected signals. These limitations are given in detail in Section 2, paragraph 1.*c.*

The deficiencies of a normal radar system and an MTI system both result in blind spots. In brief, the vertical pattern of a search radar antenna has several null points (see figure 2–4). Blind spots from nulls in the vertical radiation pattern are at definite vertical angles. Aircraft flying in one of these nulls will be undetected whether MTI is in use or not.

Also, the ability to detect a moving target with or without MTI depends on the transmitter pulse rate, the antenna beamwidth, the antenna rotation speed, and the speed of the target because these factors control the number of pulses or scans that strike a target.

With the pulse rate and antenna horizontal beamwidth fixed, blind spots caused by insufficient scans are a direct function of relative target speed. Actually, blind spots are less apt to be caused by MTI than by normal operation. In any case, they are often not apparent when a moving target is in an area masked by ground clutter.

One of the main limitations of MTI is the inability to produce images of moving targets which are traveling at certain relative speeds (see figure 2–3). Relative speed is the rate of change in range. For example: if the range of a moving target is not changing, its relative speed is zero.

Another main limitation of MTI is the inability to detect weak moving target images in the presence of heavy ground clutter. However, moving targets can be seen through ground clutter if the amplitude of the moving target is at least one twentieth (approximately) of the amplitude of fixed targets which are at the limit level of the receiver IF amplifier.

To obtain optimum information from the equipment, the operator should become thoroughly familiar with the system limitations as given above. In considering these limitations from the operating standpoint, the following procedure is suggested:

(1) Become familiar with the steadiness of moving targets, as seen on the PPI, while using normal radar operation.

(2) Note especially the blind areas of a particular location, including the average range at which aircraft disappear in the horizon shadow.

(3) Note areas which produce blocks of heavily saturated signals (clutter signals). In these areas, moving targets may be temporarily lost.

(4) When first picking up an aircraft target, note the direction and speed of motion and try to visualize where the target might later be picked up should it pass into a null area of the antenna pattern or should it be lost momentarily because of an MTI blind spot.

(5) Remember that targets (especially long-range targets of 80 miles or more) are more likely to move into an antenna null point at high altitudes than at low altitudes. (This is based on targets which are included in the 11° main vertical lobe of the antenna.)

(6) Remember, too, that an aircraft may land at any moment, resulting in the disappearance of its re-

TABLE 4–1. OPERATING CONTROL FUNCTIONS

Note

Conventional controls (such as FOCUS and INTENSITY) which do not require explanation are omitted.

CONTROL	FUNCTION	REASON FOR ADJUSTMENT
AZIMUTH AND RANGE INDICATOR IP-141A/TPS-1D		
AMPL. BALANCE (R2627)	Adjusts gain of delay amplifier (signal comparator).	To amplitude-balance MTI video for cancellation of clutter signals.
ANTI-JAM (S607)	Changes video amplifier characteristic.	To permit reduction of interference from jamming signals.
AZIMUTH	Sets initial position of PPI sweep.	To permit azimuth calibration.
CALIBRATION CONTROLS	Adjust basic circuits.	To permit initial and maintenance adjustments of basic circuits (gates, PPI centering, etc.).
L.O. MOTOR (S613)	Tunes local oscillator frequency (Z511).	To set local oscillator frequency (60 Mc above signal frequency).
MTI TIME BALANCE (R2618)	Adjusts timing of MTI triggers.	To time-balance MTI circuits for cancellation of clutter signals.
OPERATION (S601)	Selects display.	To permit displaying of normal or gated MTI video and also permit using A-scope for adjusting coho frequency. (When in COHO ADJ. position, coho operates with normal display, thus permitting adjusting coho to 60 Mc for zero beat with 60-Mc incoming signals and also for locking on converted transmitter signal.)
RANGE MARKS MILES (S608)	Switches markers ON, OFF, or TEST.	To permit range measurements (TEST position used for checking 25-mile markers).
RECEIVER GAIN (R608)	Adjusts gain of 60-Mc amplifier.	To permit setting receiver gain at indicator.
STROBE (R1657)	Positions 10-mile strobe sweep when A-scope RANGE switch is in EXP. position.	To permit viewing on A-scope any 10-mile portions of range from 20 to 180 miles.
MTI RANGE GATE (R603)	Adjusts gate length of gate generator.	To set the operating point (in miles) at which the system switches from MTI to normal radar.
SIGNAL COMPARATOR CM-36A/TPS-1D		
MTI AMPL. BALANCE (R2354)	Adjusts gain of 9-Mc delay amplifier through video balancer (automatic) circuit.	To permit adjusting operating point of balancer for maintaining equal output levels of delay and non-delay MTI circuits. (Equal output levels are a requisite for fixed target cancellation.)
Calibration Controls	Adjust basic circuits.	To permit initial and maintenance adjustments for proper operation of MTI.
COHO LEVEL (R2351)	Adjusts coho output level.	To permit adjustment of coho output level for proper operation of 60-Mc phase detector.

TABLE 4—1. OPERATING CONTROL FUNCTIONS (Cont'd)

CONTROL	FUNCTION	REASON FOR ADJUSTMENT
SIGNAL COMPARATOR CM-36A/TPS-1D		
COHO SYNC (R2355)	Sets level of signal from coho pre-amplifier.	To set level of 60-Mc pulse signal for phase-locking Coho oscillator.
MTI BALANCE (R2356)	Adjusts timing of MTI triggers.	To time-balance MTI circuits for cancellation of clutter signals.
GATE BALANCE (R3328)	Sets d-c level of MTI gate equal to d-c level of normal gate.	To assure equal signal levels of normal and MTI video during gated-MTI operation.
C305* (60-Mc IF Amplifier Input Tuning)	Adjusts tuning of 60-Mc IF amplifier input circuit.	As the 60-Mc frequency to which the received signals are converted is a function of the L.O. circuit adjustment, the input to the 60-Mc IF is tunable so that the 1-Mc acceptance bandwidth of the 60-Mc IF amplifier can be adjusted to the converted frequency. The remaining stages of the 60-Mc IF have a bandwidth of approximately 5 Mc, thus providing a band of uniform gain over which the input circuit may be tuned.
C361* (Coho Tuning)	Adjusts coho frequency.	To permit setting coho frequency to zero-beat with frequency of converted transmitter signal (60 Mc), thus making it possible to lock coho to transmitter.
DELAY LINE INPUT (R2352)	Adjusts gain of 9-Mc amplifier following 9-Mc oscillator (video modulated oscillator).	To set 9-Mc signal for proper operating level of quartz delay line.
IF AMPL. LEVEL (R2350)	Adjusts gain of 60-Mc amplifier.	To permit setting receiver gain at signal comparator.
MTI VIDEO GAIN (R3306)	Adjusts gain of MTI video amplifier.	To permit adjusting MTI video to same level as normal video.
NON DELAY AMPL. OUT. (R2353)	Adjusts gain of 9-Mc non-delay amplifier.	To set output video level of non-delay branch of MTI circuits.
OPERATION SELECTOR (S2354)	Sets operating condition of radar system (normal, MTI, and coho adjust) at signal comparator.	To permit selection of normal, coho adjust, and MTI operation at signal comparator for initial adjustment. In the REMOTE position, AMPL. BALANCE R2354, MTI TIME BALANCE R2356 and IF AMPL. LEVEL R2350 are replaced by MTI TIME BALANCE R2618, MTI AMPL. BALANCE R2627, and RECEIVER GAIN R608 in the indicator. Also, the NORMAL, COHO ADJUST, and MTI positions of S2354 are replaced by corresponding positions of OPERATION S601 at the indicator unit.
TEST SELECTOR (S2353)	Selects circuits of R2350—R2354 for level indication on test meter.	To permit proper adjustment of R2350—R2354 (listed above).

*Internal adjustment.

flection. Knowing the location of all landing fields (including fields which could be used for aircraft landing) in range of the radar is of assistance in this respect.

Actually, MTI operation adds but little to the inherent limitations of a normal search radar. In operation it is assumed that gated MTI is used at all times, the only exception being when normal radar operation is used to obtain general operating experience or in an emergency should a fault develop in MTI circuits.

2. OPERATING PROCEDURE.

a. GENERAL.

The operating procedure is divided into three parts:

Starting

Checking

Operating

The starting procedure provides only the necessary information for completely energizing the equipment. Some of the steps in this procedure include checking of primary circuit functions (primary supply, fuses, etc.).

The checking procedure covers a check of the operating controls for proper functioning. Some adjustments are included. These adjustments consist of setting infrequently used controls (scope focus, scope intensity, etc.).

The operating procedure provides information for making operating adjustments for general usage of the equipment. Particular usages of controls are given in paragraph 4.

Table 4–1, at the end of this section, provides data on control functions. This table should be referred to frequently when first becoming familiar with the operation of the equipment.

In the operating procedures it is assumed that the equipment is properly set up and that no defects (poor tubes, etc.) are present in the system. Also, it is assumed that alignment has been made as given under paragraph 3. below.

If proper operation cannot be obtained, check alignment by performing all of the adjustments of paragraph 3. Alignment adjustments which require particular skill are omitted; these adjustments are to be made by the technician. If proper operation cannot be obtained after making alignment adjustments, have a technician check the equipment.

Note

Infrequently used controls on the indicator are provided with shaft locks. These locks should be kept secured except when making adjustments. By so doing, these more or less fixed adjustments will not be inadvertently turned when making adjustments on adjacent frequently used controls.

All of the IFF operating controls, with the exception of the preset IFF VIDEO control and the IFF pre-trigger switch (see Section 3, paragraph 6.*d.*), are located on the IFF equipment or elsewhere apart from the AN/TPS-1G equipment. See the associated IFF equipment instruction book for IFF operating procedure.

b. STARTING. (*See figures 4–1 through 4–4.*)

(1) Log the reading of the OPERATING HOURS meter (power supply) (see figure 4–1).

(2) With the indicator POWER switch in the OFF position, the ANTENNA ROTATE control set at zero on the ANTENNA SPEED indicator, the TRIGGER switch (modulator) at EXTERNAL, and the MAGNETRON AGING VARIAC switch (modulator) at OUT, apply power to the equipment (see figures 4–2 and 4–3).

CAUTION

The MAGNETRON AGING VARIAC switch (modulator) should be set to the IN position only when the variac is used for magnetron aging (see paragraph 9.*b.*(3)(*b*), Section 7). At all other times the switch should be set to the OUT position to prolong the life of the variac and prevent inadvertent operation of the equipment at a reduced power setting.

Note

Heater power should be supplied continuously if ambient temperatures drop below 32°F.

(3) On the power supply, check the VOLTMETER for a reading of 109 to 121 volts and check the LINE FREQUENCY meter for a reading of 384 to 416 cycles (see figure 4–1). If necessary, the line voltage can be adjusted by means of Variable Power Transformer TF-238/U.

CAUTION

The tuning meter on the front panel of the azimuth and range indicator (see figure 4–2) indicates line voltage when the meter switch is in the 115 VAC 400~ position. The tuning meter can be used for checking or adjusting the line voltage provided it has been checked against a line voltage of 115 volts as indicated on the power supply VOLTMETER. Component tolerances and differences in the ac line voltage waveform may cause a red line indication on the tuning meter for voltages other than the nominal 115 volts ac. If it is desired to use the tuning meter for monitoring and adjusting the line voltage, it should be checked initially and periodically thereafter, at least once a week, against a line voltage of 115 volts ac as indicated on the power supply voltmeter.

(4) Throw the POWER switch (indicator unit) to ON.

(5) Observe the blown-fuse indicators (power supply unit) periodically during the next five minutes while the equipment is warming up. (See Section 5, paragraph 3.*a.* in the event of fuse failure.)

VOLTMETER
INDICATES INPUT VOLTAGE (115 VOLTS NOMINAL) OF EXTERNAL 400~ SUPPLY

LINE FREQUENCY Meter
INDICATES FREQUENCY (400~ NOMINAL) OF EXTERNAL 115 VOLT SUPPLY

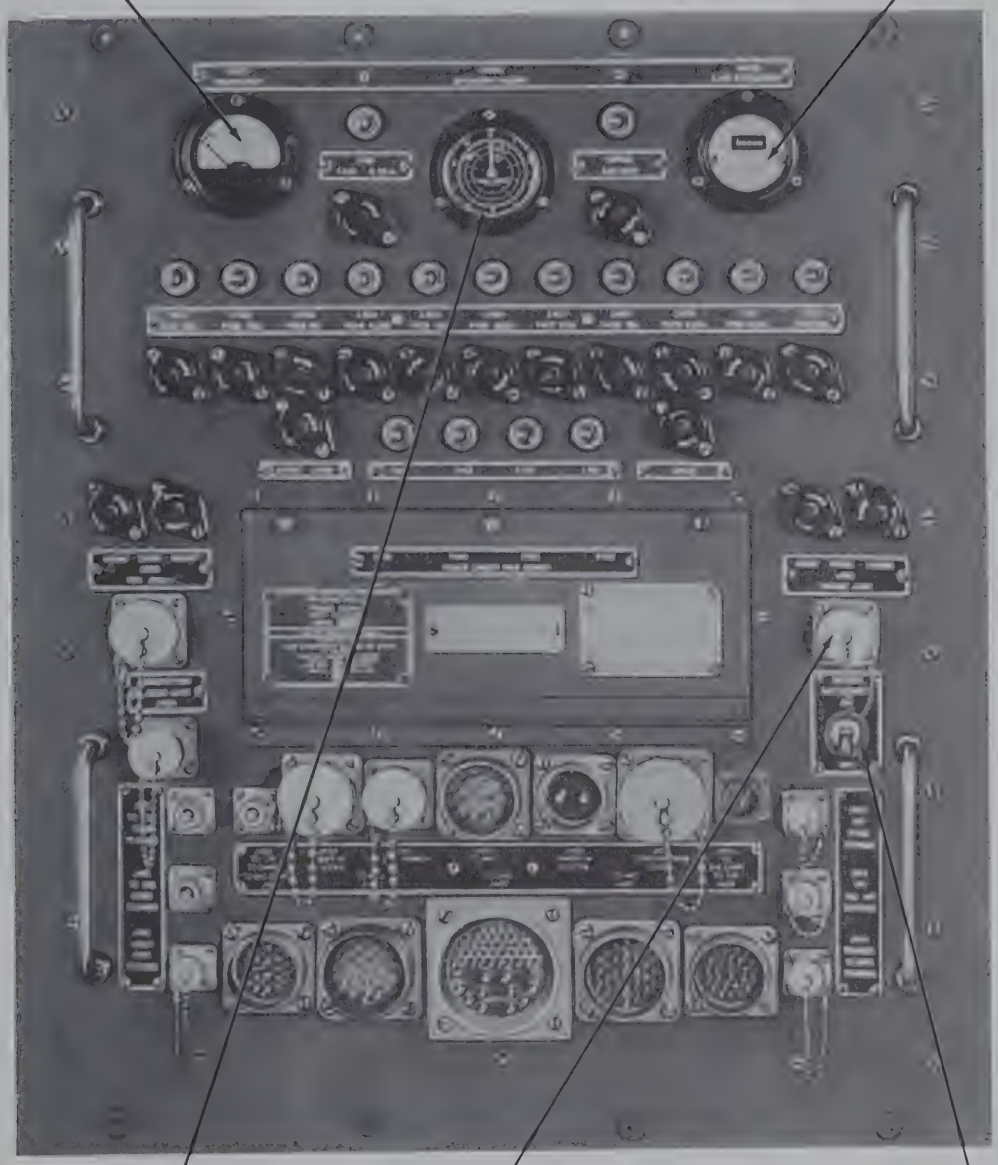

ELAPSED TIME Meter
INDICATES OPERATION TIME (RADIATE ONLY)

PHONE JACK
PROVIDES CONNECTIONS OF SOUND POWERED PHONES FOR COMMUNICATION TO INDICATOR AND ANTENNA BASE UNITS

SWITCH ANT. BLOWER
TURNS TENT VENTILATING FAN IN ANTENNA BASE ON OR OFF

Figure 4—1. Power Supply Panel Details

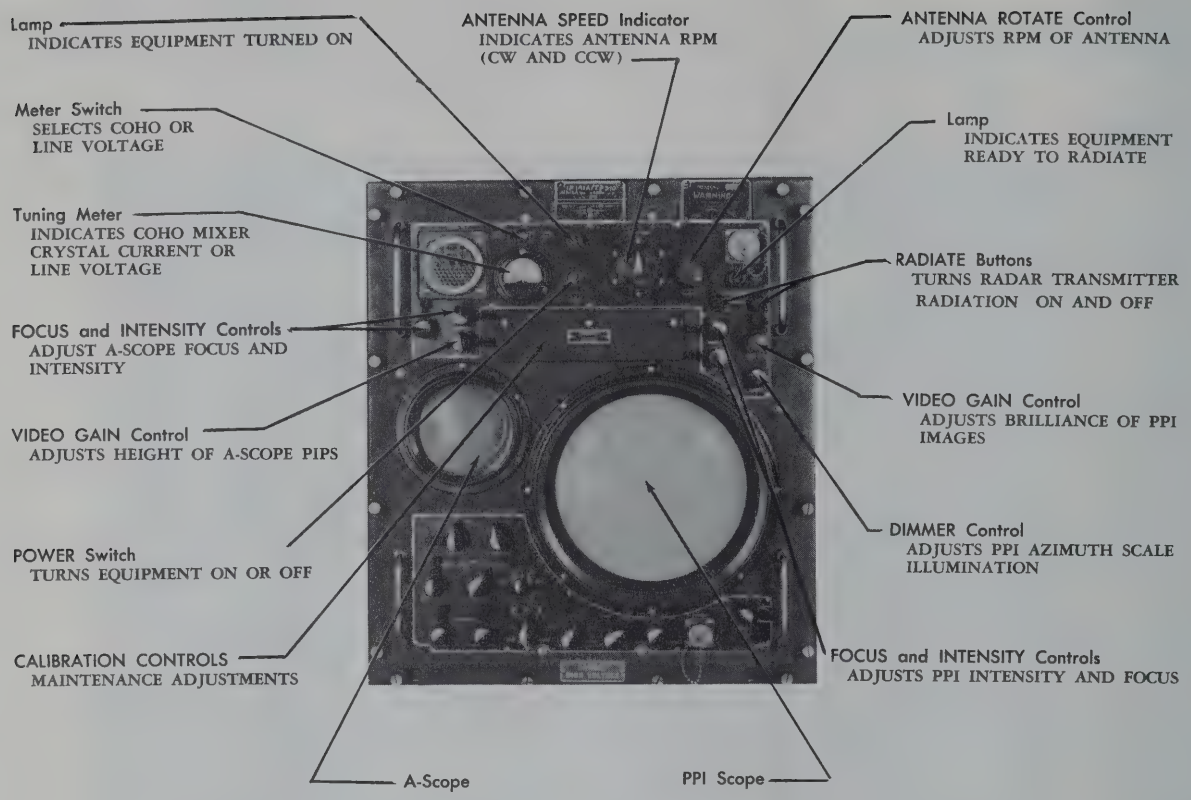

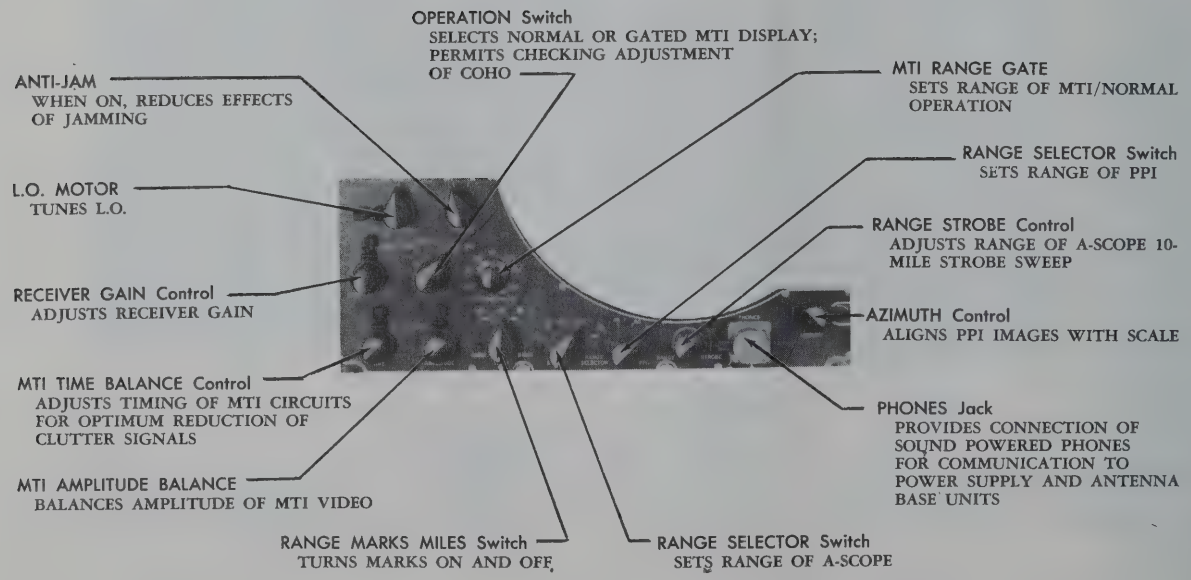
OPERATION Switch
SELECTS NORMAL OR GATED MTI DISPLAY; PERMITS CHECKING ADJUSTMENT OF COHO
ANTI-JAM
WHEN ON, REDUCES EFFECTS OF JAMMING
MTI RANGE GATE
SETS RANGE OF MTI/NORMAL OPERATION
RANGE SELECTOR Switch
SETS RANGE OF PPI
L.O. MOTOR
TUNES L.O.
RANGE STROBE Control
ADJUSTS RANGE OF A-SCOPE 10-MILE STROBE SWEEP
RECEIVER GAIN Control
ADJUSTS RECEIVER GAIN
AZIMUTH Control
ALIGNS PPI IMAGES WITH SCALE
MTI TIME BALANCE Control
ADJUSTS TIMING OF MTI CIRCUITS FOR OPTIMUM REDUCTION OF CLUTTER SIGNALS
PHONES Jack
PROVIDES CONNECTION OF SOUND POWERED PHONES FOR COMMUNICATION TO POWER SUPPLY AND ANTENNA BASE UNITS
MTI AMPLITUDE BALANCE
BALANCES AMPLITUDE OF MTI VIDEO
RANGE MARKS MILES Switch
TURNS MARKS ON AND OFF
RANGE SELECTOR Switch
SETS RANGE OF A-SCOPE

Figure 4–2. Indicator Panel Controls

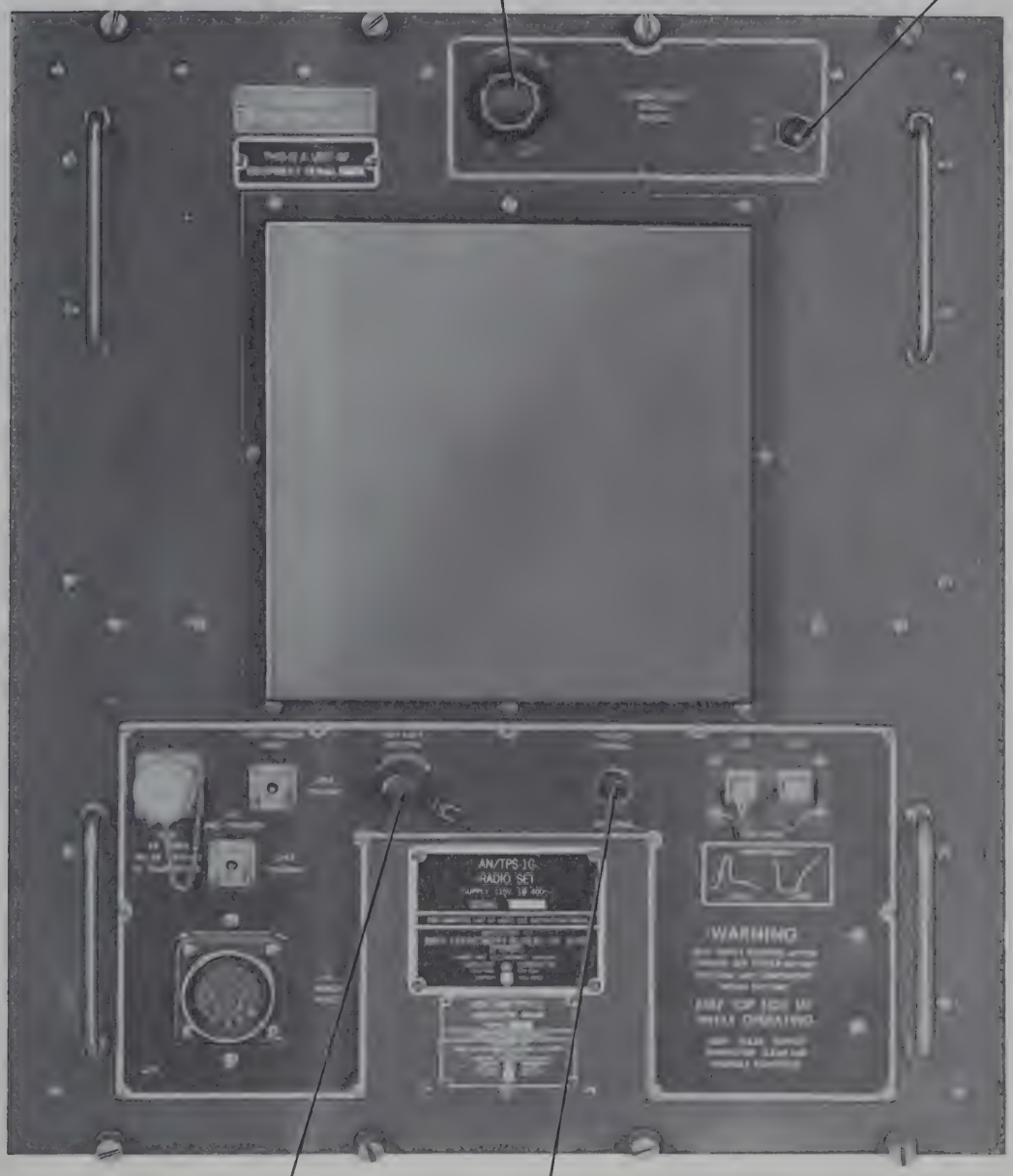
MAGNETRON AGING VARIAC Control
PERMITS ADJUSTMENT OF MAGNETRON PLATE CURRENT
MAGNETRON AGING VARIAC Switch
SWITCHES VARIAC IN OR OUT OF CIRCUIT
AN/TPS-1G
RADIO SET
WARNING
REP. RATE CONTROL
ADJUSTS REPETITION RATE (360-400 PPS), WHEN USING INTERNAL TRIGGERS
TRIGGER Switch
SELECTS EXTERNAL TRIGGERS FOR MTI OPERATION OR INTERNAL TRIGGERS FOR NORMAL OPERATION IN ABSENCE OF MTI TRIGGERS

Figure 4–3. Modulator Panel Controls

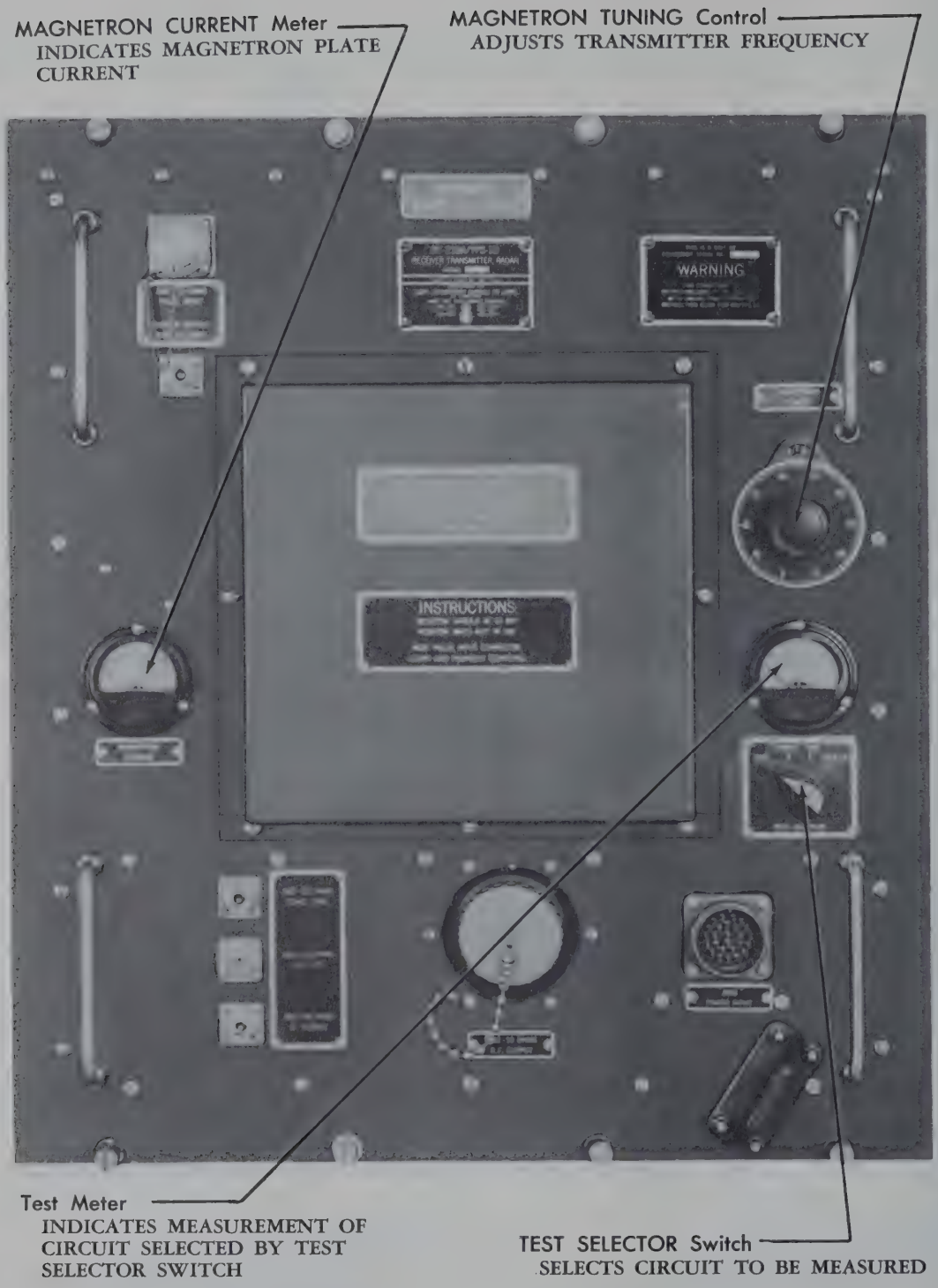

Figure 4–4. Receiver-Transmitter Panel Controls

CAUTION

For ambient temperatures of 0° F or below, allow a longer warm-up period before applying power to the transmitter, as given in step (7) below. One-half hour warm-up is required at −65°F, the lowest temperature at which the equipment has been designed to operate. Proportionately shorter warm-up periods are permissible for temperatures up to 0°F.

(6) Also during the warm-up period, check the magnetron filament current (receiver-transmitter unit) (see figure 4–4), using the MAG. FIL. position of the TEST SELECTOR switch and the red line meter. (The meter should read approximately 70% of full scale during the 5-minute warm-up and drop to the red line when the transmitter RADIATE ON button (indicator) is pressed.)

(7) While observing the MAGNETRON CURRENT meter (receiver-transmitter unit), press the RADIATE ON button (indicator unit). (The reading should be 40-44 ma for normal line voltage, as given in step (3) above.) If the magnetron is new, or if the equipment has been out of service for a month, the magnetron should be aged, following the procedure given in Section 7, paragraph 9.*b.* (3) (*b*).

CAUTION

If the magnetron current is in excess of 46 ma at any time during operation, shut down the equipment and have the technician check. Damage to the transmitter magnetron may result if the equipment is operated with a magmetron current greater than 46 ma.

c. CHECKING. *(See figures 4–1 through 4–5.)*

Note

The following checking procedure is given not only to make sure that the equipment is in proper adjustment but also to familiarize the new operator with the controls and their functions. Later, as the operator becomes experienced, some steps of the checking procedure may be omitted, these checks being accomplished automatically as an operating function. For example, the range mark checks and also the antenna rotation checks will automatically be made as the operator uses the equipment.

(1) Check the VOLTMETER and LINE FREQUENCY meter (power supply unit) for readings of 109 to 121 volts and 384–416 cycles respectively. If necessary, the line voltage can be adjusted using Variable Power Transformer TF-238/U.

(2) Make sure that the magnetron current is steady and in the range of 40—44 ma (see CAUTION in step 2.*b.*(7) above).

(3) Check antenna rotation, both clockwise and counterclockwise, by means of the ANTENNA ROTATE control (indicator unit). If the PPI sweep rotation does not follow the antenna rotation smoothly, stop the antenna immediately and perform the adjustment procedure outlined in Section 7, paragraph 10.*c.*

Note

The ANTENNA SPEED indicator, to the left of the ANTENNA ROTATE control, shows clockwise and counterclockwise speed settings of the speed control. A detent holds the control in the OFF position.

(4) On the receiver-transmitter, check the COHO crystal current, SIG. (signal) crystal current, and MAG. FIL. voltage by means of the TEST SELECTOR switch and the red-line reading of the associated meter.

(5) Check the range marks on both the A and PPI scopes by turning the RANGE MARKS MILES switch (indicator unit) to TEST and the A and PPI RANGE SELECTOR switches to 80.

Note

If the indicator unit is set (internally) for 5- and 25-mile marks, there should be five short 5-mile marks for every 25-mile mark (normal amplitude) on the A-scope and five dim marks for every 25-mile mark (normal brightness) on the PPI. If the indicator is set (internally) for 10-mile marks, check the marks as outlined in the next step.

(6) Check the marks for steadiness and correct number by switching to all ranges on both scopes, with the RANGE MARKS MILES switch in the ON position.

Note

If the indicator unit is set (internally) for 5- and 25-mile marks, there should be one mark for every five miles of range on 20- and 40-mile scales, and one mark for every 25 miles of range on the 80- and 160-mile scales. If the indicator is set for 10-mile marks, there should be one mark for every 10 miles of range on all scales.

(7) Set the following switches as indicated:
OPERATION SELECTOR (signal comparator unit) — REMOTE.
OPERATION (indicator unit) — NORMAL.
RANGE SELECTOR (both A and PPI) (indicator unit) 160.
ANTENNA ROTATE (indicator unit) — 0°
ANTENNA SPEED.

(8) Check the adjustment of the A-scope INTENSITY, FOCUS, and VIDEO GAIN controls (located to the left and above the A-scope) for desired illumination, optimum focus, and a signal height of approximately one inch, respectively.

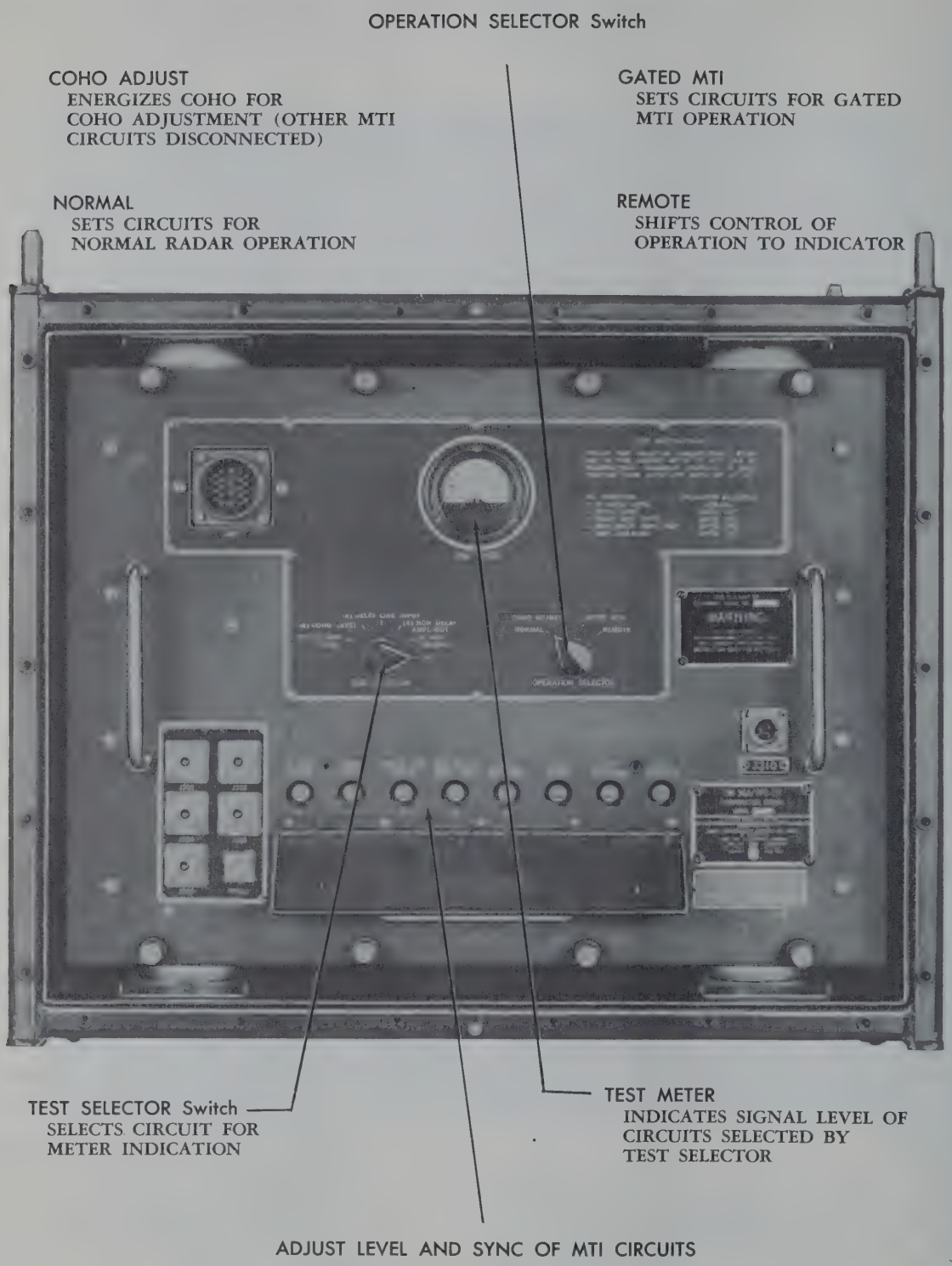
OPERATION SELECTOR Switch
COHO ADJUST
ENERGIZES COHO FOR COHO ADJUSTMENT (OTHER MTI CIRCUITS DISCONNECTED)
GATED MTI
SETS CIRCUITS FOR GATED MTI OPERATION
NORMAL
SETS CIRCUITS FOR NORMAL RADAR OPERATION
REMOTE
SHIFTS CONTROL OF OPERATION TO INDICATOR
TEST SELECTOR Switch
SELECTS CIRCUIT FOR METER INDICATION
TEST METER
INDICATES SIGNAL LEVEL OF CIRCUITS SELECTED BY TEST SELECTOR
ADJUST LEVEL AND SYNC OF MTI CIRCUITS

Figure 4–5. Signal Comparator Panel Adjustments

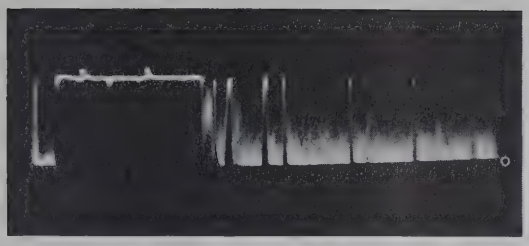

NORMAL RADAR OPERATION

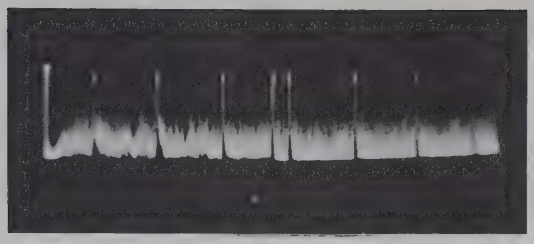

RADAR OPERATION WITH MTI

Figure 4—6. Normal A-Scope Presentation

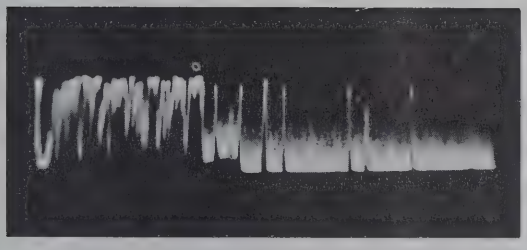

AMPLITUDE BALANCE MISADJUSTED

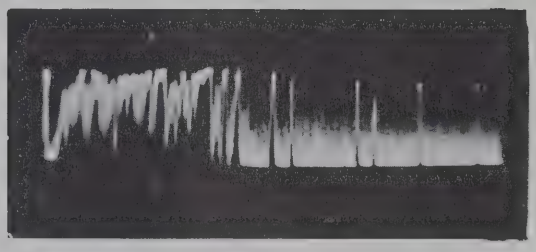

MTI TIME BALANCE MISADJUSTED

Figure 4—7. A-Scope Presentation Showing Balance Misadjustments

(9) Check the adjustment of the PPI INTENSITY, VIDEO GAIN, and FOCUS controls (located to the right and above the PPI) as follows:

(*a*) Set the PPI RANGE SELECTOR switch to 80.

(*b*) Turn the PPI VIDEO GAIN control fully counterclockwise, and adjust the INTENSITY control until the trace just disappears.

(*c*) Advance the VIDEO GAIN control until a trace appears and produces a slightly milky background when the antenna is rotated.

(*d*) Adjust the FOCUS control for sharpest detail.

(10) Check signals on all ranges with the antenna rotating to make sure that the sensitivity of the system is normal.

(11) Hold the L.O. MOTOR switch at the INC position until signals drop out.

(12) Operate the L.O. MOTOR switch momentarily in the DEC position until signals appear, and then operate the L.O. MOTOR switch in either position as required to tune in maximum signals.

CAUTION

Be careful not to tune through to the low-frequency side of the transmitter signal frequency.

(13) Check the signal comparator unit for correct meter readings according to the procedure on the signal comparator nameplate.

Note

IF AMPL LEVEL control should be adjusted with the RADIATE switch (indicator unit) OFF.

(14) Set the OPERATION SELECTOR switch (signal comparator) to REMOTE and set the OPERATION switch (indicator) to GATED MTI.

(15) Set the MTI RANGE GATE control (indicator) to a point beyond the ground clutter.

(16) With the antenna rotating slowly, and using the 20-mile ranges on both scopes, adjust the MTI BALANCE (TIME and AMPLITUDE) controls (indi-

cator) individually for a minimum of clutter signals (fixed targets). (See figures 4–6 and 4–7.)

Note

Make observations at the left end of the A-scope sweep. Clutter signals appear as well-defined steady signals, while moving-target signals fluctuate somewhat and are apt to appear as several superimposed signals of slightly varying amplitudes (see figure 4–6).

(17) Set the A-scope RANGE SELECTOR to 160 and the MTI RANGE GATE to 80. Compare the grass level of the MTI video (1st 80 miles) and the normal video (2nd 80 miles). If the grass level is different, adjust R3306 as given in paragraph 3.*c.*, steps (28) and (29), below.

(18) Set the A-scope RANGE SELECTOR switch at EXP. and check the expanded sweep by turning the RANGE STROBE control and observing signals on the A-scope.

Note

It should be possible to display any 10-mile portion of the received signals from 20 to 160 miles with the PPI strobe mark (similar to a single range mark) indicating the minimum range of the strobe.

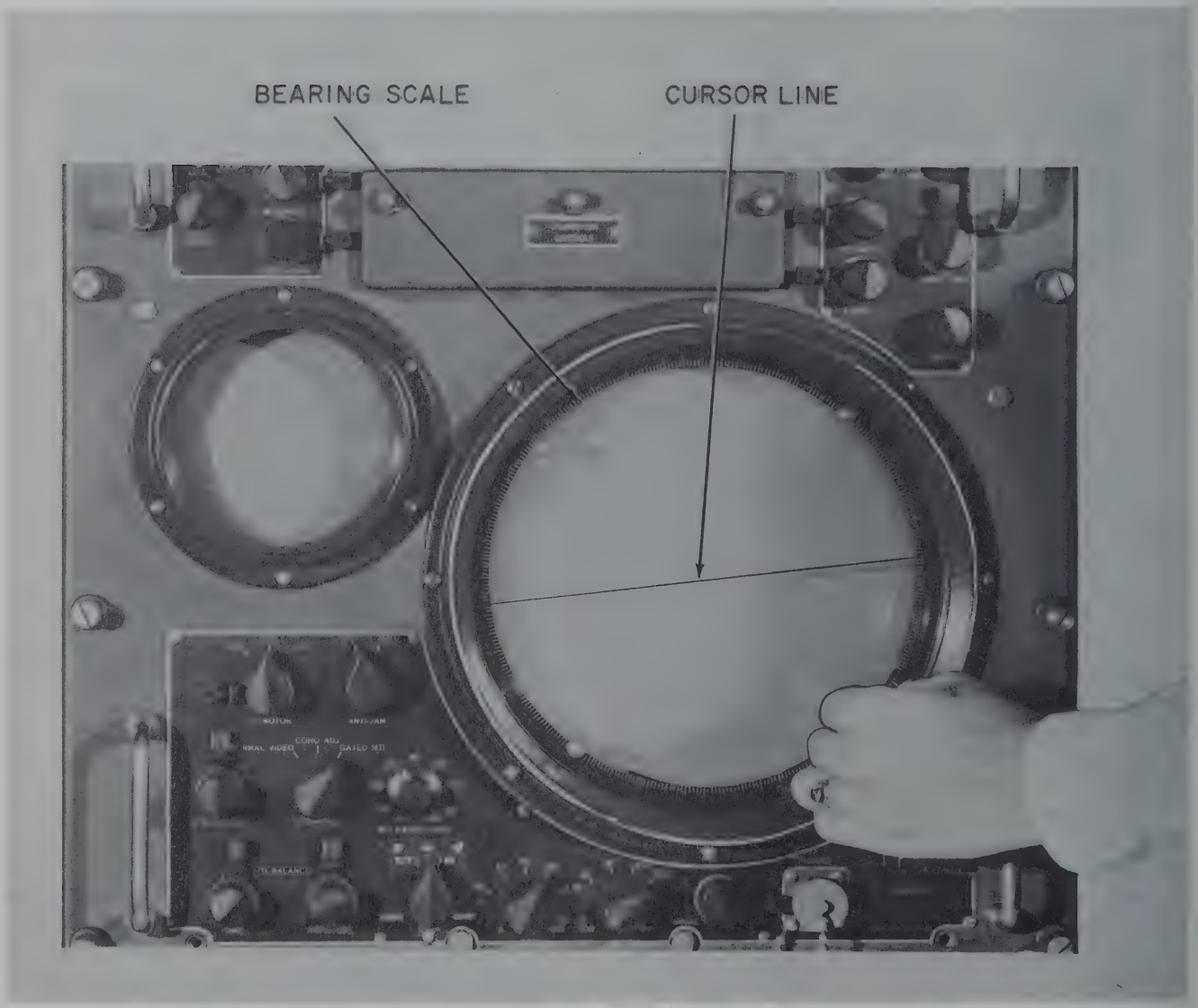

Figure 4–8. Use of Amber Filter with Cursor Line

d. OPERATING. *(See figure 4–2.)*

Note

Do not disturb the MAGNETRON TUNING control setting. This control is adjusted only by the technician.

All adjustments are made at the indicator unit.

(1) Start the equipment as outlined in paragraph *b.* above.

(2) Check the equipment as outlined in paragraph *c.* above.

Note

Make sure that the signal comparator OPERATION SELECTOR switch is at REMOTE so that the MTI AMPL. BALANCE, MTI TIME BALANCE, OPERATION, and RECEIVER GAIN controls are in effect at the indicator unit.

(3) Set the A and PPI RANGE SELECTOR switches for the desired range.

(4) Turn the ANTENNA ROTATE switch for clockwise rotation and at a speed only high enough to produce a good impression on the PPI and also to permit detection of small pips on the A-scope.

Note

For average use, a speed of 5 to 10 rpm is usually adequate. (At 7 rpm, a plane traveling at 500 mph covers approximately 1.2 miles between each rotation of the antenna. This antenna speed will usually provide a satisfactory check on plane movements.)

(5) For average use, maintain the A-scope grass level at about one fourth of the height of signals at limit level by the use of the RECEIVER GAIN control (normal radar only).

Note

See paragraph 4(*b*) for other uses of the RECEIVER GAIN control.

(6) Keep the MTI AMPLITUDE BALANCE and MTI TIME BALANCE controls adjusted for best cancellation of fixed targets. (See figures 4–6 and 4–7.) Use the COHO position of the OPERATION switch to check for an unlocked condition of coho as indicated by the beating effect of signals on the A-scope. If this conditions occurs, see paragraph 3.*c.*, steps (17)–(21).

(7) To track moving targets, sector-scan by turning the ANTENNA ROTATE switch back and forth so as to scan only the immediate area of the target.

(8) Turn the RANGE MARKS switch to ON to produce range marks by which range information can be estimated.

Note

Indicators set (internally) for 5- and 25-mile marks have 5-mile marks on 20- and 40-mile scales and 25-mile marks on 80- and 160-mile scales. Indicators set (internally) for 10-mile marks have 10-mile marks on all scales.

(9) Use the NORMAL VIDEO position of the OPERATION selector switch for a momentary check of MTI effectiveness or for emergency use should a fault in MTI circuits occur which cannot be corrected.

(10) If, at any time, observation of any 10-mile portion of the A-scope sweep from 20 to 160 miles is desired, turn the A-scope RANGE SELECTOR switch to the EXP position and turn the RANGE STROBE control for the desired range. A marker (similar to a range mark) on the PPI scope shows the low-range end of the strobe position.

(11) To obtain azimuth information, use slow antenna rotation and note the bearing on the PPI scale at the end of the sweep trace as the trace passes over the target.

Note

Adjust the DIMMER control to illuminate the PPI azimuth dial as required. An amber filter with an etched cursor line is available in the reserve parts. This filter is to be placed over the PPI screen. Bearings can then be taken by orienting the cursor line to intersect the center of a target (see figure 4–8).

(12) If, during watch, the receiver is not held in tune and the condition cannot be corrected by realignment, operate the L.O. MOTOR switch back and forth between its two positions to tune the receiver for maximum signals. Use normal radar operation or set the MTI RANGE GATE control to zero and recheck the tuning occasionally. If continual manual tuning is necessary, call the technician to restore normal operation.

CAUTION

Do not tune excessively in the DEC (decrease) direction, as it is possible to tune the local oscillator to the low-frequency side of the signal, thereby producing impaired results.

(13) If improper operation develops and if realignment as given in paragraph 3.*c.* does not remedy the defect, have a technician check the equipment.

3. ROUTINE ALIGNMENT.

a. GENERAL.

In the following procedure it is assumed that the transmitter frequency has been set, that internal adjustments (gate-lengths, TR cavity tuning, crystal current, etc.) are properly set, and that no irregularities exist in the system. In other words, the adjustments which require special skill have been made by the technician. The

adjustments given below are those which the operator on duty is required to make.

Two of these adjustments are internal and require only periodic attention. They are necessary, however, for a complete alignment and hence should be familiar to the operator so that he will be capable of adjusting them.

In all cases the operator should know what is being adjusted and why the adjustment is being made. Table 4—1 and the alignment outline given below should be carefully studied before attempting the alignment procedure. When making adjustments, note particularly the effect of each as seen on the scopes. By so doing, the need for readjustment of a particular control during operation will be more easily detected.

b. ALIGNMENT OUTLINE.

(1) Adjust the local oscillator.

(2) Tune the 60-Mc IF amplifier input.

(3) Adjust the signal comparator signal levels.

(4) Tune the coho for synchronization (involves adjusting level of locking signal).

(5) Adjust the MTI timing (MTI BALANCE) and video amplitude balance (AMPL. BALANCE) at the signal comparator to eliminate clutter.

(6) Adjust the MTI video level to the indicator.

(7) Set the OPERATION SELECTOR of the signal comparator to REMOTE. Adjust the MTI TIME and AMPLITUDE BALANCE controls at the indicator (duplication of step (5), but at indicator).

(8) Switch the OPERATION selector from NORMAL VIDEO to GATED MTI and adjust the RECEIVER GAIN control on the indicator for equal background on normal and gated MTI operation.

c. ALIGNMENT PROCEDURE.

To align the system for MTI and/or normal radar operation, proceed as follows:

Note

Unless otherwise noted, all adjustments are on the indicator. If it is impossible to align the equipment as outlined, or if it is impossible to obtain satisfactory signals, have the technician check the equipment for possible fault.

(1) Start the equipment as outlined in paragraph 2.*b.* and make the checks given in paragraphs 2.*c.* (1) and (2).

(2) Allow the equipment to warm up further for a total time of *at least* one-half hour after the transmitter is energized.

(3) Connect Tuned Cavity TS-172B/UP (echo box) to J501 on the receiver-transmitter, and tune the echo box to the transmitter frequency as indicated by the meter on the echo box.

(4) Set the OPERATION switch to GATED MTI, set the two RANGE SELECTOR switches to 20 and set the MTI RANGE GATE to 0.

(5) Hold the L.O. MOTOR switch in the INC position for at least one-half minute. (This tunes the local oscillator to its high-frequency extreme.)

(6) Check the COHO and crystal SIG currents with the TEST SELECTOR switch (receiver-transmitter unit) and its associated meter.

Note

The signal (SIG) crystal current should be at or near the red line. Impaired operation usually results if the signal crystal current reading is $\pm 20\%$ of the deflection represented by the red line. The coho crystal current may be to the left of the red line but should be at least 20% of the deflection represented by the red line. The coho circuit will operate properly for coho crystal current in the range of 10% of full-scale deflection up to full-scale deflection. However, the technician should adjust the coho crystal current for a red-line reading at the first opportunity.

(7) Tune the local oscillator for maximum signals by operating the L.O. MOTOR switch in the DEC position for one-second periods while observing the A-scope.

Note

Make adjustments carefully so that the local oscillator will not be tuned through to the low-frequency side of the signal. If there is any question of being on the correct side, repeat steps (5) and (7).

(8) When signals appear, tune for maximum width of the echo box signal as seen on the A-scope. (The echo box signal appears as a solid signal extending 10 to 16 miles from the zero range position of the A-scope (as shown in figure 4—9).

Note

Low signal strength may indicate that internal adjustment is necessary, as given in the succeeding steps.

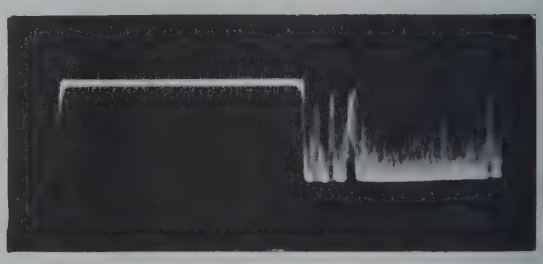

Figure 4—9. A-Scope Presentation Showing Appearance of Echo Box Signal with Operation Selector on Normal Video

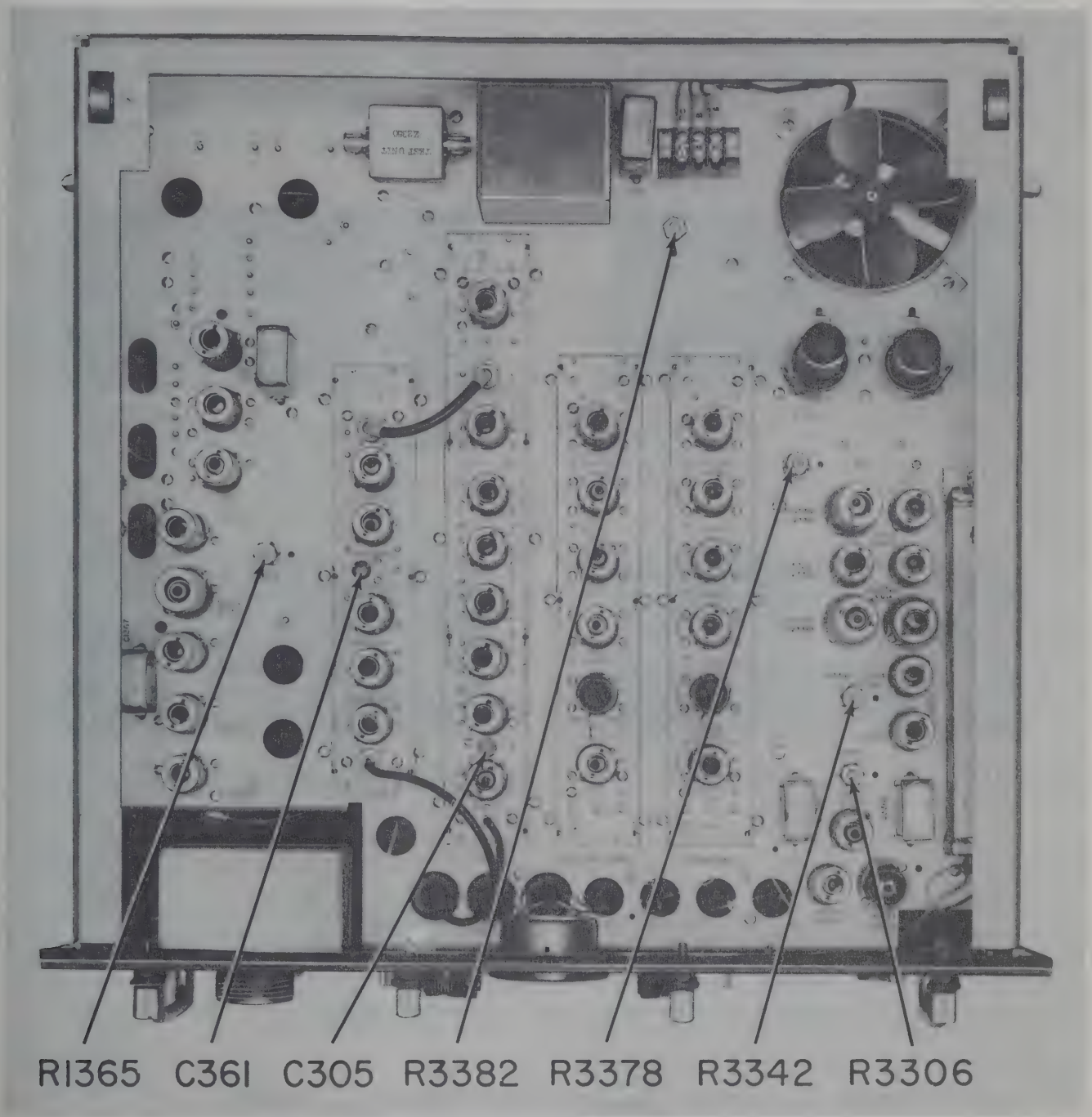

Figure 4—10. Signal Comparator Internal Adjustments

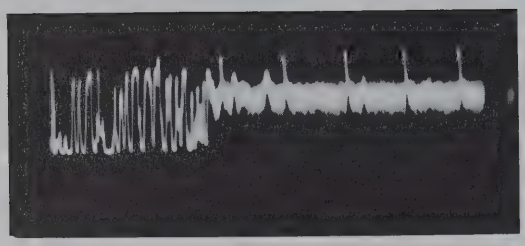

COHO ADJUSTMENT NORMAL

(A)

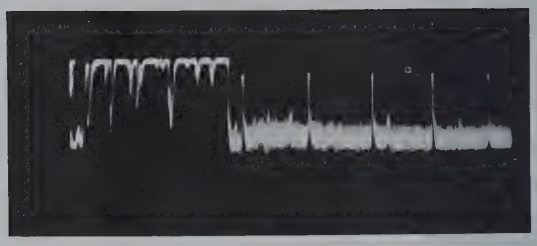

COHO LEVEL ADJUSTMENT LOW

(B)

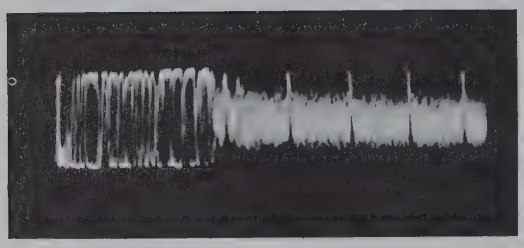

COHO SYNCH MISADJUSTED

(C)

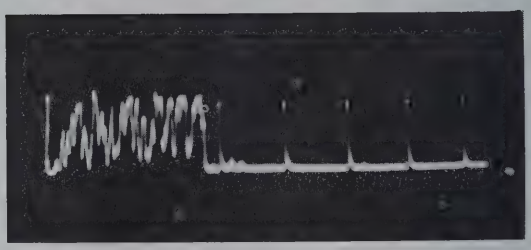

COHO OFF FREQUENCY (C361 SET IMPROPERLY)

(D)

NOTE

THE "A" SCOPE PRESENTATIONS ABOVE WERE TAKEN WITH THE ANTENNA ON A FIXED BEARING, THUS MOVING TARGETS WERE APPEARING AND DISAPPEARING DURING THE PERIOD THE PICTURES WERE TAKEN.

Figure 4–11. A-Scope Presentation with MTI Showing Various Conditions of Coho Adjustment with Operation Selector on Coho Adjust

(9) Loosen the four captive screws at the top and bottom of the signal comparator and pull the unit out of its case until caught by the chassis catch.

(10) Adjust C305 (signal comparator) (see figure 4–10) for the mid-position of the region producing maximum signal strength.

Note

Adjustment of C305 will affect the level of the IF amplifier. Set the OPERATION SELECTOR to NORMAL and readjust IF AMPL LEVEL control R2350 each time that C305 is adjusted.

(11) Repeat step (8) above.

(12) If at this point the signal strength is observed to be below normal, have a technician check the TR tuning in the receiver-transmitter as given in Section 7, paragraph 9.*b.* (2)(*a*). (Unless the signal strength is considerably below normal, the following adjustments can be made without difficulty.)

(13) Disconnect Tuned Cavity TS-172B/UP (echo box) from J501.

(14) At the indicator, depress the RADIATE OFF button.

(15) On the signal comparator panel, adjust the screwdriver controls (figure 4–5) as indicated on the nameplate. (Note the positions of the OPERATION SELECTOR switch for the different positions of the TEST SELECTOR switch.)

(16) At the indicator, depress the RADIATE ON button.

(17) Set the OPERATION SELECTOR switch (signal comparator) to COHO ADJUST and turn the COHO SYNC control (a screwdriver adjustment) fully counterclockwise (see figure 4–5).

(18) Observe the signals on the left end of the A-scope sweep. A beating or pulsing effect should be noted if C361 requires adjustment as given in the next step. (The rate of pulsing is an indication of the extent to which the coho is off frequency.) See figure 4–11D.

(19) On the signal comparator chassis, carefully adjust C361 (shown in figure 4–10) to reduce the beat seen on the A-scope signals to zero (see figure 4–11A).

Note

Refer to Section 3, paragraph 6.*c.*, steps (25) through (32), for alternate adjustment procedure.

(20) Turn the COHO SYNC control (signal comparator) counterclockwise until the A-scope signals unlock, as indicated by a slow change in the character of the signals (see figure 4–11C).

Note

If by chance C361 was set exactly, this effect may not be apparent. If the coho level adjustment is low the display will have the appearance of figure 4–11B.

(21) Slowly turn the COHO SYNC control clockwise until the signals lock in (become steady); then turn the control about 20° further clockwise (see figure 4–11A).

(22) At the indicator, set the MTI RANGE GATE control to 80. On the signal comparator panel, turn the OPERATION SELECTOR switch to GATED MTI and adjust the AMPL. BALANCE and MTI BALANCE controls individually for a minimum of clutter signals (fixed targets) (see figures 4–6, 4–7, and 4–12).

Note

If clutter signals cannot be balanced out and the signal pattern repeats as shown in figure 4–13, an adjustment of the carrier gate is necessary. Have a technician make adjustment.

(23) Adjust GATE BALANCE control R3328 (signal comparator panel) so that the MTI and normal video levels are equal, as shown in figure 4–14.

(24) Set the MTI RANGE GATE to 0, set the A-scope and PPI RANGE SELECTOR switches to 160, and rotate the antenna 3 to 5 rpm clockwise.

(25) Set the A-scope INTENSITY and VIDEO GAIN controls for a height of approximately 1 inch on limited video signals. (Grass height should be approximately one fourth of the video signal height.)

(26) With the PPI VIDEO GAIN control fully counterclockwise, set the PPI INTENSITY control at a point where the PPI trace can barely be seen or just disappears.

(27) Advance the PPI VIDEO GAIN control to a point where the trace leaves a milky background. (The milky background is produced by receiver circuit noise and is equivalent to the A-scope grass. It is an indication that the video level is set at the threshold of signal visibility.)

(28) Set the MTI RANGE GATE to approximately 80 miles and compare the noise level of the MTI section with that of the normal section.

(29) If the amplitudes are unequal, adjust MTI GAIN control R3306 on the signal comparator (see figure 4–10) for equal noise levels.

(30) Close and secure the signal comparator.

(31) Turn the OPERATION switch (indicator unit) to GATED MTI and turn the OPERATION SELECTOR switch (signal comparator) to REMOTE.

(32) Adjust the MTI TIME and AMPLITUDE BALANCE controls (indicator unit) for a minimum of clutter signals as in step (22) above. (Temporarily shift the two RANGE SELECTOR switches to the 20 positions for adjustment.)

(33) Switch to NORMAL VIDEO operation (indicator unit) and adjust the RECEIVER GAIN control so that the grass level is approximately the same as it is when viewed in GATED MTI operation position.

(34) If initial alignment is being made, adjust the ANTENNA ROTATE control for 0 rpm and then adjust the AZIMUTH control to orient the PPI images for true readings in relation to the azimuth scale sur-

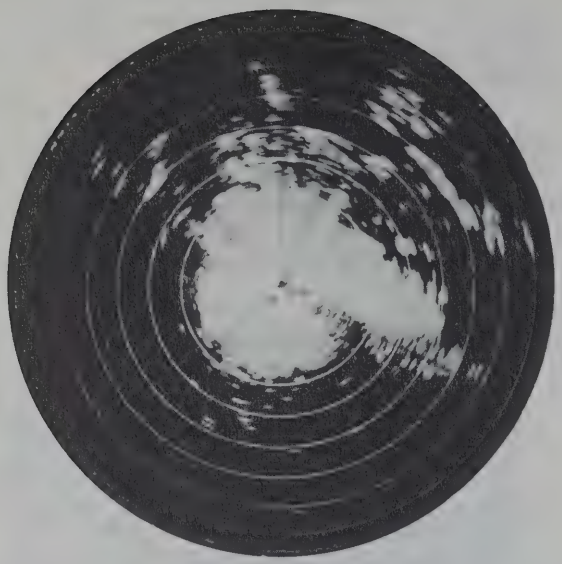

NORMAL OPERATION ——
RANGE SELECTOR 160
MTI RANGE GATE 0

GATED MTI OPERATION ——
RANGE SELECTOR 160
MTI RANGE GATE 80

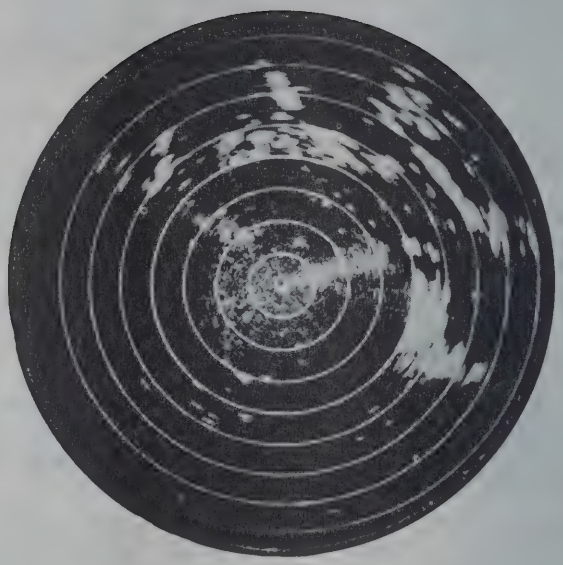

MTI OPERATION ——
RANGE SELECTOR 160
MTI RANGE GATE 160

Figure 4—12. Comparison of PPI Scope Signals With and Without MTI

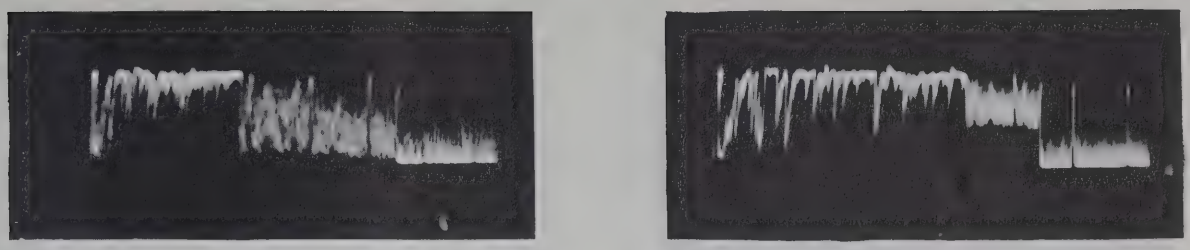

Figure 4—13. A-Scope Presentation Showing Misadjustment of 2500-Microsecond Gate

rounding the PPI tube. (Alignment is best accomplished by taking visual azimuth measurements on the most distant object which also stands out clearly on the PPI. This information is then used to orient the PPI pattern.)

CAUTION

If the ANTENNA ROTATE control is not at 0 rpm and the AZIMUTH control is pushed inward, the gear teeth may be stripped. To operate the AZIMUTH control, first lift upward on the latch at the left of the control. Then push inward and rotate the control as required. Releasing both the control and the latch disables the control knob.

4. OPERATING NOTES.

a. VIDEO GAIN CONTROLS.

According to the alignment procedure, the VIDEO GAIN controls of the A and PPI scopes are adjusted for optimum receiving conditions. Once the A-scope VIDEO GAIN control is set for a deflection of approximately one inch on video signals at limit level, there should not be any signal condition which warrants changing this adjustment. As indicator tubes age, it may be necessary over long periods to readjust the control to maintain the operating amplitude.

This does not entirely apply to the PPI VIDEO GAIN control, however. When the indicator OPERATION switch is turned to NORMAL VIDEO a blooming effect may be noted on the PPI trace as it passes over areas containing large blocks of saturated signals. This produces poor PPI definition in these areas.

The normal tendency is to reduce video gain to a point where definition is improved. If this is done, it will be observed that the milky background has disappeared in areas where no fixed targets are present. This means that reflections at or near the noise level will undoubtedly leave no impression on the PPI scope.

For this reason, the PPI VIDEO GAIN control should be left in its locked, adjusted position and readjusted only when it is necessary to maintain the milky background. An exception to this rule might be when normal radar is being used in an emergency. A reduction in PPI video gain could help in tracking moving targets which are near areas producing reflections that cause blooming. Another exception is when the RECEIVER GAIN control is varied from its normal operating position (see following paragraph).

b. RECEIVER GAIN CONTROL.

This control of the indicator unit is initially adjusted to produce the same grass level on the A-scope as that obtained by the IF AMPL LEVEL adjustment on the signal comparator. This latter control is adjusted with the signal comparator OPERATION SELECTOR switch in the NORMAL position and using the red-line reading of the signal comparator TEST METER (with the RADIATE switch off).

The RECEIVER GAIN control provides a means for maintaining the normal grass level in the indicator and is normally used for this purpose. It functions only when the signal comparator OPERATION SELECTOR is set to REMOTE. However, the control can be adjusted momentarily for best display of a particular signal condition. When using reduced settings, *never* reduce the setting to a point where no grass appears on the A-scope, as a weak long-range target might approach to close range before it is picked up. Also, when using reduced settings of the RECEIVER GAIN control, advance the PPI VIDEO GAIN control so as to bring out the detail desired.

When on NORMAL VIDEO (indicator unit) and receiving conditions are good, advanced settings of the RECEIVER GAIN control can be used for improved sensitivity. When on NORMAL VIDEO and using advanced settings, do not advance the control beyond the point which produces clipping of the noise peaks on the A-scope. It is usually necessary to reduce the setting of PPI VIDEO GAIN control so that the background noise is reduced to its normal milky appearance. Be sure to readjust the PPI VIDEO GAIN control for a milky background when the RECEIVER GAIN control is returned to its normal operating position.

c. COORDINATION OF A AND PPI SCOPES.

While tracking a particular object on the low ranges

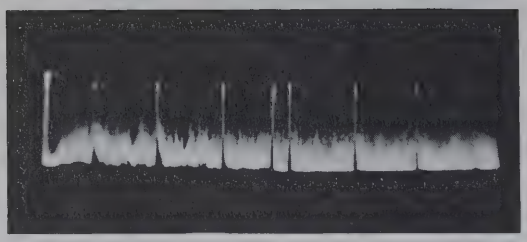

ADJUSTED CORRECTLY

MISADJUSTED

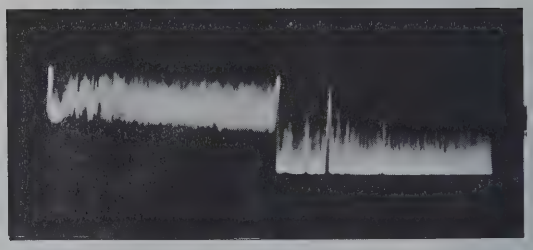

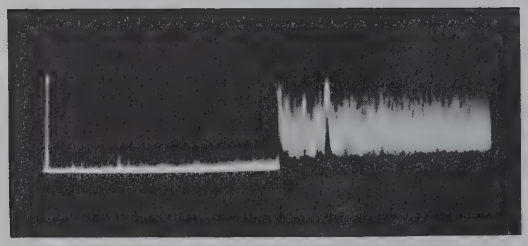

MISADJUSTED

Figure 4—14. A-Scope Presentation Showing Range Gate Balance Adjustment

of the PPI scope, it may be advantageous to monitor areas out to the extreme range of the equipment for other approaching targets. In this case, the A-scope can be set to the 160-mile range and observed during the time the PPI sweep is off target.

In general, it is a good practice to have one scope or the other set at the 160-mile range so that approaching targets may be detected at the earliest moment. Accordingly, the use of the 160-mile range of the PPI is recommended while the 10-mile strobe sweep (EXP.) of the A-scope is in use.

When the strobe sweep is in use, it is usually because detailed A-scope information is desired of a PPI target. Although the target on the PPI scope may be better shown on the 40- or 80-mile PPI range, it is best to have the PPI range set at 160 while the A-scope strobe is being positioned to include the target.

d. USE OF INTERNAL TRIGGERS.

Normally the equipment is operated with the TRIGGER switch on the radar modulator unit in the EXTERNAL position for MTI operation. When so operated, triggers are developed in the signal comparator so that coordination can be established in the MTI circuits. The radar can be operated for either MTI or normal reception with external triggers.

Should the MTI circuits develop trouble which cannot be cleared by realignment as given under paragraph 3.*c.* above, the TRIGGER switch can be set INTERNAL so as to use triggers generated in the modulator. The trouble may be due to the signal comparator unit not developing proper triggers, in which case the reading on the MAGNETRON CURRENT meter (receiver-transmitter unit) will usually be erratic or outside its normal range. It is also likely that undue arcing will be heard in the RF system of the receiver-transmitter. (This is also true for a like defect of internal triggers.)

When using internal triggers, the system can be operated *only* for normal radar reception. The REP. RATE CONTROL on the modulator unit is normally locked in approximately its mid-position, which sets the repetition rate of internal triggers midway in the range of 360 to 400 pps.

If, when using internal triggers, interference from another radar is being experienced (indicated by a dot or dots moving along the scope traces), the REP. RATE CONTROL can be varied to minimize the interference.

Another use of this control is in checking long-range ghost reflections resulting from preceding transmitter pulses. Long-range reflections usually occur because of certain atmospheric conditions which cause the micro wave signal to be reflected downward far beyond the horizon. These are more frequent in some areas of the globe than in others. Long-range ghost reflections appear as normal targets, and if the image is approaching and is tracked, it will disappear at zero range. Later the target may be picked up at the end of the long-range sweep as a normal-range reflection.

If a target is suspected of being a long-range ghost, change the setting of the REP. RATE CONTROL while observing the target. If the target is a ghost reflection, it will change its position in range with the change in repetition rate. Normal images, of course, remain fixed in range with a repetition rate change.

e. EXHAUST FAN OPERATION.

The exhaust fan for tent ventilation is located in the antenna base unit. The switch (S401) which operates this fan is located on the right side of the power supply unit panel.

Note

The exhaust fan is inoperative when the antenna is installed and operated remotely. (See Section 3, paragraph 4.*d.*)

f. PROTECTIVE DEVICES.

There are three protective devices in the equipment with which the operator should be familiar. These provide protection against servo amplifier (antenna base) overload, transmitter overtemperature, and transmitter overload.

If the servo amplifier is overloaded, the antenna speed will drop to approximately one rpm or less. When this occurs, the antenna will not pick up speed, no matter where the ANTENNA ROTATION control is set. It is then necessary to set the control to zero for two or three seconds; and if the overload was temporary, the antenna will rotate normally when the ANTENNA ROTATION control is advanced.

If the condition causing overload is not temporary, it may be impossible to obtain normal antenna rotation, in which case the technician should investigate the cause immediately.

Temporary overloads are usually caused by high winds or by reversing the direction of rotation quickly from one extreme to the other. A sustained overload condition undoubtedly would be due to a defect in the rotating mechanism.

The transmitter overtemperature protection is provided by a thermo-operated switch mounted adjacent to the magnetron oscillator tube. The protection is actually for the magnetron, and if the temperature rises above 185°F, the switch operates and removes the pulse power to the magnetron. This same effect is also produced by operation of the transmitter overload protective relay, and thus it is not immediately apparent to the operator which device caused the transmitter to shut down.

However, the procedure to be followed is the same for either cause. First check for indication of a blown fuse. If none is indicated, push the RADIATE ON button. If the overtemperature switch has operated, the transmitter cannot be turned on, as evidenced by no magnetron current. Dirty air filters (receiver-transmitter unit) could cause an overtemperature condition, in which case the operator can correct the condition as given in Section 6, paragraph 5.*e.* If dirty filters are found and cleaned as given in Section 6., reinstate the overtemperature switch S501 (see figure 4–15). If the transmitter again shuts down because of overtempera-

ture, have the technician investigate the cause, as the trouble is undoubtedly due to a defective blower.

If the transmitter shuts down because of operation of the overload relay, the transmitter will come on when the RADIATE ON button is pressed. If the overload was temporary, the transmitter should stay on. Operation of the overload relay as often as once or twice an hour is acceptable, but if temporary overloads become more frequent, the technician should investigate the condition.

If the transmitter shuts down because of a sustained overload condition, it undoubtedly will be impossible to keep the transmitter *on* for more than a few seconds at a time.

Temporary overloads are mainly caused by a momentary arc-over in the RF system or by a slight gas condition in the magnetron tube. Sustained overloads usually result from a defective magnetron or modulator tube, sustained arc-overs, defective components, etc.

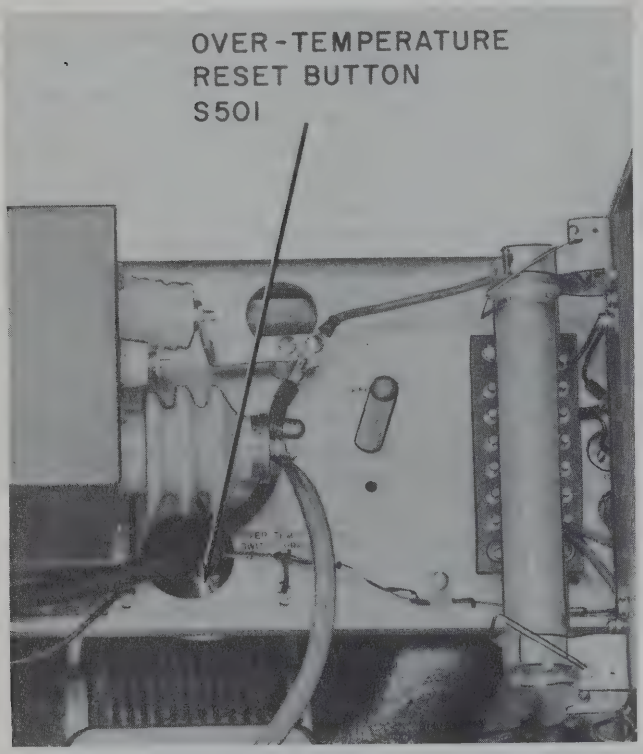

Figure 4–15. Transmitter Overtemperature Reset Button

g. USE OF PHONE CIRCUIT.

When the indicator unit is operated remotely, it may be advantageous to make use of the phone circuit between the indicator unit and the remainder of the equipment. The phone jack at the equipment appears on J410 of the power supply unit (see figure 4–1). The indicator phone jack is shown in figure 4–2.

Sound-powered phones with 1/4-in.-diameter tip and sleeve plugs are required.

This phone circuit also extends to the antenna base unit. The main use of the circuit is for maintenance adjustments when the antenna is operated remotely.

h. RANGE MARKER SPACING.

References to the spacing of markers are made in terms of miles – 5, and 25, or 10 miles. When measurements are made in terms of yards, these figures become 10,000, 50,000, and 20,000 yards respectively. The 5-, 25- and 10-mile figures are used on the indicator schematic diagram (figure 7-112) and also on the indicator panel adjacent to MARKER INTENSITY controls R1617 and R1629. Wherever the mile figures appear, they should be interpreted in yards as indicated above if yard measurements are being used.

The RANGE MARKS switch S608, below and to the left of the PPI scope, has a nameplate which is reversible. Equipments are shipped with this nameplate reading RANGE MARKS MILES which is applicable for services using mile measurements. The reverse side of the nameplate reads RANGE MARKS YARDS and is intended for the use of services using yard measurements. Therefore, if yard measurements are to be used, this nameplate should be reversed.

Equipments are shipped with 10,000-yard markers (5-mile markers) on the lower two ranges and 50,000-yard markers (25-mile markers) on the upper two ranges. If 10-mile markers (20,000-yard markers) are desired on all ranges, it is necessary to change the indicator link connections in the marker generator circuit as given in Section 7, paragraph 6.*e.* (15).

The marker oscillator V615A/B, which determines the initial marker timing, is adjusted at the factory for 61 microseconds between cycles. This is the two-way time equivalent of 10,000 yards, which is approximately equal to 5 nautical miles. Actually, the factory calibration represents a −1.3% error when nautical-mile measurements are used.

For most applications this error is not too serious, as it represents a −2.1-mile error at 160-mile range. If it is desired to eliminate this error, readjustment of the marker oscillator is necessary as given in Section 7, paragraph 6.*e.*(14).

The indicator unit A- and PPI-scope range scales are 20, 40, 80, and 160 miles. The numerical value of these scales provides the operator with an approximation of the coverage of each scale, whether he is thinking in terms of statute, radar, or nautical miles. As the sweep length of each range scale is set up by the use of markers, the actual range of each scale is dependent on the calibration of the markers.

i. MTI RANGE GATE.

The MTI RANGE GATE control is calibrated directly in miles; the distance being that at which the system switches from MTI operation to normal during gated-MTI operation. The control has no function when only normal video is used.

Note

The MTI RANGE GATE control has no function if the power supply or signal comparator from an AN/TPS-1D system is substituted for the AN/TPS-1G units. If the signal comparator is being substituted, no special precaution is necessary. If the power supply unit is being substituted, however, the special adapter, E310, must be installed on J310 on the signal comparator (see Section 3, paragraph 6.*c.* (56)). If only the azimuth and range indicator from an AN/TPS-1D system is substituted for the AN/TPS-1G indicator, gated MTI operation may still be obtained for a fixed pre-set range determined by the setting of MTI GATE CAL control R3382.

SECTION 5
OPERATOR'S MAINTENANCE

1. GENERAL.

Normally the only maintenance required of the operator will be cleaning. However, in an emergency, should trouble occur and a technician is not immediately available, the operator may be called upon to restore the equipment to operation.

The two most common causes of trouble are fuse failure and tube failure, in that order. It is recommended that an ample supply of tested fuses and tubes be provided near the equipment. (Spare fuses are mounted in marked holders on the power supply unit panel.) It is also recommended that the operator become familiar with the locations and functions of each fuse and tube. Tables and illustrations are included in this section to provide this information.

2. ROUTINE CHECKS.

In general, the operation of the equipment is thoroughly checked during normal usage as given in the operating and checking procedures of Section 4. However, there are a few items not covered which should be checked by the operator at the beginning of or during each watch. These are given in table 5–1, together with some of the items covered in Section 4.

3. EMERGENCY MAINTENANCE.

Notice to Operators

Operators shall not perform any of the following emergency procedures, other than the replacement of fuses as indicated, without proper authorization.

a. REPLACING FUSES. *(See figures 5–1 and 5–2.)*

All fuses, with the exception of F417, are located on the power supply panel (F417 is mounted on the main chassis, next to V416). Each fuse, with the exception of F417, has a blown-fuse indicator lamp mounted adjacent to it: Each indicator is connected across its associated fuse so as to glow whenever that fuse is blown.

Spare fuses of various sizes will be found in the spare fuse holders on the power supply panel. If the equipment becomes partially or completely inoperative and a blown-fuse indicator is glowing, the indicated fuse may be replaced, provided the following warning is heeded:

WARNING

Make certain that the replacement fuse is of the proper size as indicated adjacent to the fuse holder. If a fuse burns out immediately after replacement, do not replace it a second time. If, in an emergency, authorization is given to replace a fuse the second time or to increase the size of a particular fuse, be alert for any indications of damage to the equipment (smoke, odors, etc.).

Low-current fuses (5 amperes or less) are more apt to blow than larger fuses over a period of time. This is due mainly to corrosion which reduces the current rating of small fuses more rapidly.

b. REPLACING ELECTRON TUBES.

(1) GENERAL.

Most of the tubes in the AN/TPS-1G are miniature type. Special care is required when replacing these tubes. When removing a miniature tube, pull straight upward with a slight rocking motion. If a tube sticks in its socket, the blade of a small screwdriver may be inserted through an opening in the base shield so as to apply pressure beneath the tube. Use only sufficient pressure to start the tube.

When installing a miniature tube, make sure the tube base pins are straight and are properly oriented with the socket pins before applying pressure. Do not apply undue pressure; a tube properly aligned with its socket can be pushed in place with only moderate pressure.

TABLE 5—1. ROUTINE CHECK CHART

WHAT TO CHECK	HOW TO CHECK	PRECAUTIONS AND REMARKS
ONCE EACH DAY (ALL SERVICES)		
Tower cables (4)	Apply pressure to guy cables so that amount of tension can be felt.	If one or more cables feel slack, tighten turnbuckles to take up slack. Turnbuckles should be only tight enough to keep tower steady. *Do not over-tighten.*
Guy cable anchors, tent stakes, and tent fasteners	Inspect for looseness or signs of movement.	If anchors or stakes should loosen or show signs of movement, have them reset. *Always check these items after a windstorm.*
Signal Comparator	Check adjustment according to instructions on unit panel nameplate.	Make sure correct control is turned when making readjustments. If adjustment cannot be made, have technician check.
Coho and signal crystal currents, and magnetron filament voltage	Check according to instructions on receiver-transmitter panel nameplate.	If readings are not within indicated range, have technician check.
Line voltage and frequency	On power supply unit, check readings of VOLTMETER and LINE FREQUENCY Meter.	Line voltage should be within 109 to 121 volts and line frequency 384—416 cycles. If readings are outside of limits and cannot be adjusted with Variable Power Transformer TF-238/U, or fluctuating, have technician check power source.
All units, externally	Check for dirt.	If dirty, clean with clean dry cloth. If possible, shut down equipment so that loosened dirt will not be sucked into filters by blowers.
Operation using internal triggers	With indicator controls set for normal radar operation, throw TRIGGER switch (modulator) INTERNAL and check displays for no change in performance. Also, MAGNETRON CURRENT meter (receiver-transmitter) should show little or no change in reading.	As external triggers (EXTERNAL position of modulator TRIGGER switch) are necessary for MTI operation, *do not check operation on MTI when using internal triggers.* Have technician check trigger generator in modulator if conditions are not as indicated.

TABLE 5—1. ROUTINE CHECK CHART (Cont'd)

WHAT TO CHECK	HOW TO CHECK	PRECAUTIONS AND REMARKS
System sensitivity	1. Turn ANTI-JAM switch to ON. 2. Check most distant individual signals for strength on both A and PPI Scopes.	Be sure equipment is properly tuned according to Sec. 4, par. 3. As suggested in Sec. 4, par. 1.*a.*, use objects previously selected at time of initial operation. If no reliable objects are present in a particular location, connect Tuned Cavity TS-172B/UP to RF TEST J501 on receiver-transmitter panel and with ANTI-JAM switch OFF, tune box for maximum range of A-scope saturated signal. Echo box signal should extend at least 10 miles.
ONCE EACH WATCH (ALL SERVICES)		
Triggering of IFF equipment by AN/TPS-1G	See applicable instruction book for IFF equipment being used.	If IFF response is weak and cannot be corrected by normal IFF operating adjustments, have technician check. If no IFF display appears on the PPI, and it is known that IFF signals are being received, secure authorization to replace V601 (IFF video amplifier).
ONCE EVERY 100 HOURS (ARMY); ONCE EVERY 120 HOURS (NAVY)		
Cable fittings	Make sure all fittings are hand-tight.	Include connections at power source.
Shelter tent	Check zipper and snap fasteners. Check canvas visually for undue strain at points of tension. Check for abrasion at contact points. Check grommet holes for signs of tearing. Check for water leaks or dampness.	Secure any loose fittings. Relieve any points of undue tension by adjustment of rope supports. Have tent serviced for tears or loosened grommets. *Always check tent after severe storm.* If water has entered, dry equipment thoroughly.
Ground rod and ground connections	Check ground rod for tightness in earth. Check ground rod and unit ground jumper connections.	If ground rod can be easily pulled up by hand, drive the rod in a new location.

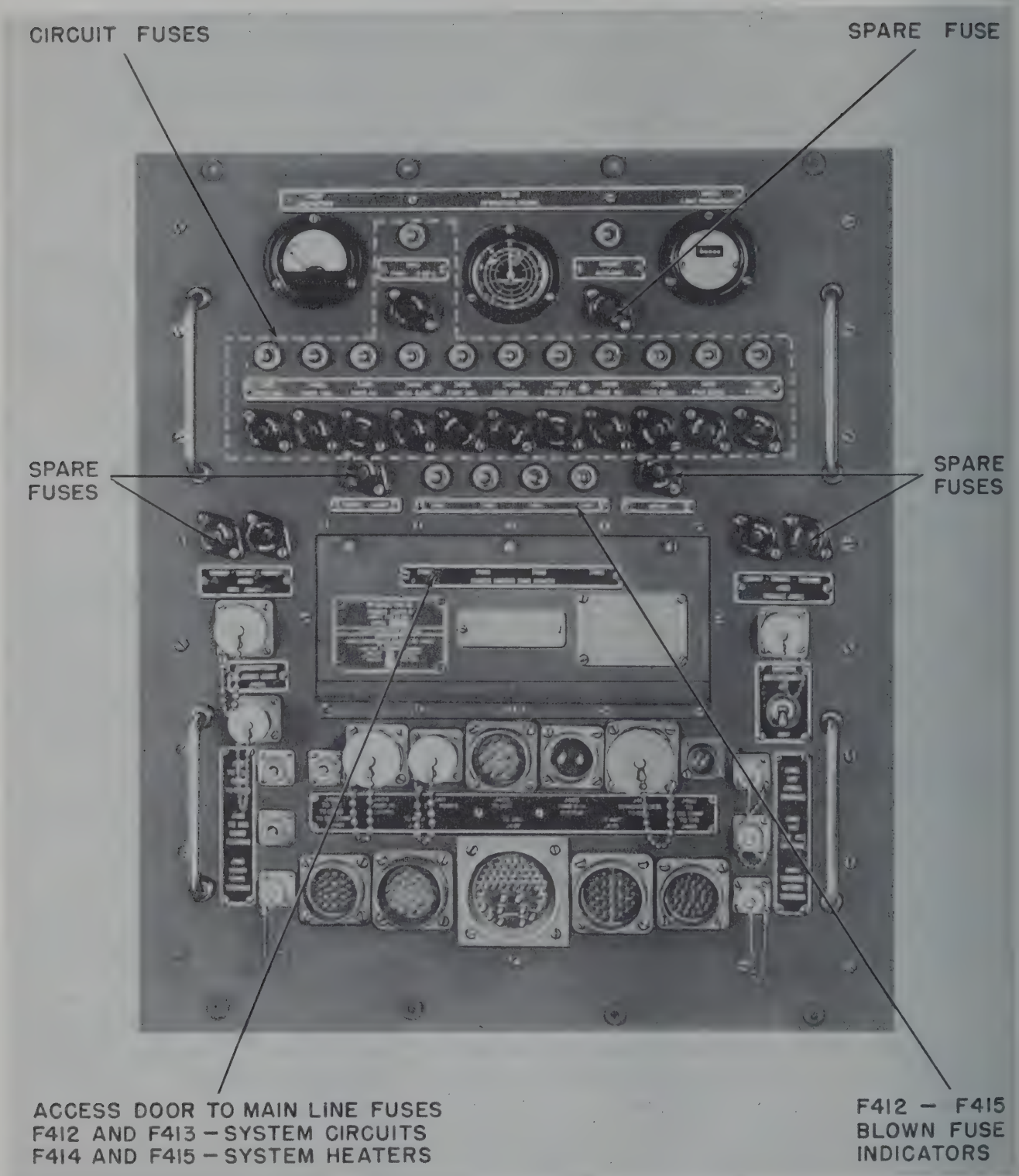

Figure 5–1. Power Supply Fuses

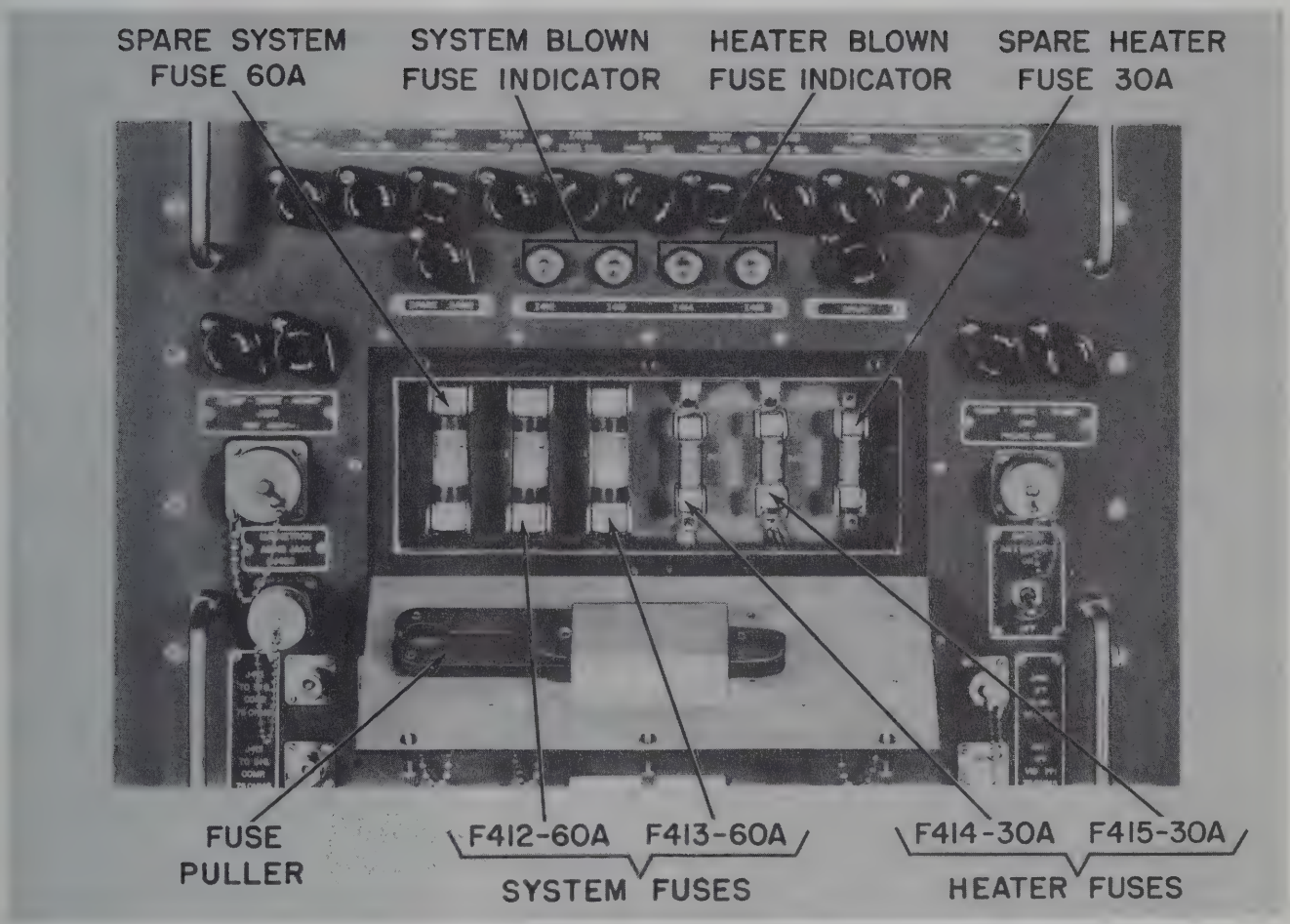

Figure 5—2. Power Supply System and Heater Fuses

Tubes which the operator should not attempt to replace are as follows: magnetron V502, TR tubes V503A and V504A, and local oscillator V505. These tubes require special techniques in replacement and/or special adjustments after replacement.

Green circles, marked around tube sockets, indicate tubes which are essential to the main functions of the equipment.

(2) LOCATING FAULTY TUBES.
(See table 5–2.)

Tube locations are given in figures 5–3 through 5–15. Be sure to replace tube shields and/or plate caps. Paragraph (4) below describes the method of gaining access to tubes.

To locate a possible faulty tube, the following procedure is recommended:

(*a*) First make certain that:

1. Line voltage and line frequency are normal.

2. Signal and mixer crystal currents and also magnetron current are normal.

3. No blown fuses are indicated (see paragraph 3.*a.* above).

(*b*) By careful observation, try to isolate the fault to a particular unit. The following examples show the procedure:

1. No crystal or magnetron current, no readings on signal comparator, and A- and PPI- scopes dark: check power supply.

2. Magnetron current:

OK with internal triggers but none with external triggers (modulator): check signal comparator.

None with internal triggers and/or external triggers: check trigger generator tubes (modulator).

A-scope and/or PPI-scope defects (no illumination, no sweeps, no markers, no signals, etc.): check indicator.

(*c*) Check for a cold tube immediately after shut-down.

WARNING

Do not attempt to check the tubes in the modulator unit immediately after shut-down as high-voltage charges are present on the high-voltage capacitor and the pulse forming network. Pull the modulator unit from the case after shut-down. The high-voltage capacitor will be discharged in approximately 30 seconds. The charge on the pulse forming network should then be discharged by grounding the plate cap of V156 with a well-insulated screwdriver.

Before shutting down the equipment, loosen the panel screws of the unit suspected of containing a defective tube. The unit thus can be opened immediately after shut-down and a good check of tube temperatures made.

(3) REPLACEMENT OF SCOPE TUBES.
(See figure 5–16.)

WARNING

To avoid injury, abide by the recommended procedures in the handling of cathode-ray tubes. A medium-sized screwdriver is required for replacement.

(*a*) To replace the A-scope tube V625, proceed as follows:

1. Remove the indicator chassis entirely from its inner case by loosening the 16 captive panel screws (see paragraph (4) below).

2. Remove the anode cap in the opening on the left side of the V625 magnetic shield (see figure 5–10).

3. Remove the six A-scope bezel screws on the front panel, remove the bezel and bezel bushing, and slowly withdraw the tube.

Note

It may be necessary to push on the tube base key at the center of the tube socket. Be careful not to lose the four rubber grommets which cushion the A-scope tube.

4. Reverse the procedure to install an A-scope tube, being careful to replace the anode cap and properly tighten the panel captive screws.

(*b*) To replace the PPI scope tube V609, proceed as follows:

1. Remove the indicator chassis as in paragraph (4) below.

2. Remove the anode cap in opening on the right side of the V609 magnetic tube shield (see figure 5–7).

3. At the rear of the chassis, loosen the tube socket clamp screw and remove the tube socket by pulling straight outward on the socket bail provided.

4. Remove the eight PPI bezel screws and then the bezel.

5. Remove the azimuth scale by first removing the four screws located around the outside of the magnetic shield (see figures 5–7 and 5–16).

6. Carefully remove the PPI tube.

7. To install a PPI tube, reverse the procedure, being careful to replace the V609 anode cap and properly tighten the panel captive screws.

(4) GAINING ACCESS TO UNIT CHASSIS.

The captive knurled and slotted screws around the panel edges of each unit (except the antenna base and antenna) secure the chassis in their cases. The panel hand-grabs are provided to pull the chassis out of its case and for handling purposes after removal. It is usually best to remove unit cables before withdrawing a unit chassis.

When pulling outward on a unit, catches on each side of the chassis (except the indicator unit) engage with the case and stop the chassis when 16 in. out of its case. To release the catches, hinge the stop release levers out at right angles to the side of the chassis (see figure 5–17). The chassis may then be removed entirely from its case.

CAUTION

The indicator unit does not have catches. When pulling the indicator from case, use caution to prevent damage to the unit. Do not pull the signal comparator unit beyond its stops until the cables to the delay line beneath the chassis are disconnected. Be sure to replace cables in their proper places according to cable and jack markings.

To open the servo amplifier (which contains tubes for antenna rotation control), loosen the eight captive panel screws and pull out on the unit.

TABLE 5—2. TUBE FUNCTIONS

TUBE	TYPE	FUNCTION
RADAR MODULATOR		
V101A/B	6SN7WGT	Internal trigger generator (multivibrator)
V102A/B	6SN7WGT	A, Trigger amplifier; B, blocking oscillator
V103	6AG7	Cathode follower driver for V156
V105A/B	5814A	A, blocking oscillator; B, trigger amplifier
V106A/B	5726/6AL5W	A, clipper diode; B, line discharge diode
V151	371B	Modulator power supply high-voltage rectifier
V152	371B	Modulator power supply high-voltage rectifier
V153	371B	Pulse-line charging diode
V154	371B	Pulse-line charging diode
V155	4B31	Tail-clipping shunt diode
V156	5C22/HT-415	Thyratron keyer
AZIMUTH AND RANGE INDICATOR		
V601	6AH6	IFF video amplifier
V602	6AH6	PPI video amplifier
V603A/B	5814A	PPI sweep gate multivibrator
V604A/B	5726/6AL5W	A, V603 clamper; B, V622 clamper
V605	6AU6WA	PPI sweep capacitor discharge
V606A/B	5751	PPI sweep amplifier
V607A/B	5726/6AL5W	A, V608 d-c restorer; B, V609 d-c restorer
V608	6L6WGB	PPI sweep yoke driver
V609	10KP7	PPI scope
V610	6AG7	Focus current regulator
V611	6AH6	Video input amplifier
V612A/B	5814A	A, video cathode follower; B, A-scope video amplifier
V613A/B	5814A	A, keyer for V613B; B, PPI strobe marker blocking oscillator
V614A/B	5814A	Marker gate multivibrator
V615A/B	5814A	A, marker oscillator; B, feedback for V615A
V616A/B	5814A	A, marker trigger amplifier; B, keyer for V617A
V617A/B	5814A	A, 5-mile marker blocking oscillator; B, V618B keyer
V618A/B	5814A	A, V618B clamper; B, 25-mile marker blocking oscillator
V619A/B	5814A	A, A-scope video amplifier; B, A-scope signal and marker amplifier
V620A/B	5726/6AL5W	A, V612B d-c restorer; B, unused
V621A/B	5814A	Range strobe multivibrator
V622A/B	5814A	A-scope sweep gate multivibrator
V623	6AU6WA	A-scope sweep capacitor discharge
V624A/B	5751	A-scope sweep amplifier
V625	5CP1A	A-scope
V626	1B3GT	A and PPI-scope high-voltage rectifier
SIGNAL COMPARATOR		
V301	5654/6AK5W	1st 60-Mc IF amplifier
V302	5654/6AK5W	2nd 60-Mc IF amplifier
V303	5654/6AK5W	3rd 60-Mc IF amplifier
V304	5654/6AK5W	4th 60-Mc IF amplifier
V305	5654/6AK5W	5th 60-Mc IF amplifier
V306	5654/6AK5W	6th 60-Mc IF amplifier
V307	5654/6AK5W	Meter amplifier
V308	5654/6AK5W	7th 60-Mc IF amplifier
V350	5654/6AK5W	1st 60-Mc sync signal amplifier
V351	5654/6AK5W	2nd 60-Mc sync signal amplifier
V352	5654/6AK5W	3rd 60-Mc sync signal amplifier
V353	5654/6AK5W	60-Mc coherent oscillator (coho)
V354	5654/6AK5W	Coho signal amplifier
V1301	5654/6AK5W	1st delay IF amplifier
V1302	5654/6AK5W	2nd delay IF amplifier
V1303	5654/6AK5W	3rd delay IF amplifier
V1304	5654/6AK5W	4th delay IF amplifier

TABLE 5—2. TUBE FUNCTIONS (Cont'd)

TUBE	TYPE	FUNCTION
V1305	6005	5th delay IF amplifier
V1306A/B	5726/6AL5W	Delay IF amplifier detector
V1350	6AU6WA	Carrier-gate trigger amplifier
V1352	6AU6WA	Carrier-gate trigger timing amplifier
V1351	6005	Repetition rate trigger amplifier
V1353A/B	5814A	A, rep. rate trigger generator; B, 1/2 of gate multivibrator
V1354	6AU6WA	1/2 of gate multivibrator
V1355	5750/6BE6W	Gated 9-Mc oscillator
V1356	5654/6AK5W	9-Mc signal amplifier
V1357	6005	9-Mc output amplifier
V2301	5654/6AK5W	1st non-delay IF amplifier
V2302	5654/6AK5W	2nd non-delay IF amplifier
V2303	5654/6AK5W	3rd non-delay IF amplifier
V2304	5654/6AK5W	4th non-delay IF amplifier
V2305	6005	5th non-delay IF amplifier
V2306	5726/6AL5W	Non-delay IF amplifier detector
V3300	0B2WA	D-c amplifier gain stabilizer
V3301A/B	5814A	D-c amplifier for gain balancing
V3302	0B2WA	Constant-voltage-drop output tube
V3303	5654/6AK5W	MTI video balancing amplifier
V3304	5654/6AK5W	MTI video phase inverter
V3305A/B	12AT7WA	Video amplifier; A, MTI; B, normal
V3306	5725/6AS6W	MTI gate
V3307	5725/6AS6W	Normal radar gate
V3308	6AG7	Video cathode follower (to indicator)
V3309	6AG7	Video cathode follower (to TP301 and RPPI)
V3310A/B	5814A	A, phantastron diode, MTI gate generator B, phantastron c.f., MTI gate generator
V3311A/B	12AT7WA	A, output, MTI gate generator B, video amplifier
V3312	5725/6AS6W	Phantastron, MTI gate generator
POWER SUPPLY		
V401	5R4WGB	+150-volt supply rectifier
V402	5R4WGB	+150-volt supply rectifier
V403	5R4WGB	+150-volt supply rectifier
V404	5R4WGB	+300 and +450-volt supply rectifier
V405	5R4WGB	+300 and +450-volt supply rectifier
V406	5R4WGB	—150-volt supply rectifier
V407	6080WA	+150-volt supply series regulator
V408	6080WA	+150-volt supply series regulator
V409	6080WA	+150-volt supply series regulator
V410	6AH6	+150-volt regulator control amplifier
V411	0A2WA	—150-volt regulator
V412	0A2WA	—150-volt regulator
V413	0A2WA	—150-volt regulator
V414	6Y6G	+300-volt series regulator
V415	6Y6G	+300-volt series regulator
V416	6Y6G	+300-volt series regulator
V417	6AH6	+300-volt regulator control amplifier
RECEIVER-TRANSMITTER		
V222	5842	Input stage, IF preamplifier
V223	5842	2nd IF preamplifier
V224	5654/6AK5W	3rd IF preamplifier
V225	5654/6AK5W	4th IF preamplifier
V501	1Z2	Keep-alive power supply rectifier
V502	5J26	Magnetron oscillator
V503A	6322	Pre-TR tube
V504A	6322	TR tube
V505	2C40	Receiver local oscillator
V506	5654/6AK5W	Coho preamplifier
TY501	7H-11 (Amperite)	V505 heater regulator (ballast tube)
ANTENNA BASE (SERVO AMPLIFIER)		
V701	5684/C3J/A	Drive-motor supply controlled rectifier
V702	5684/C3J/A	Drive-motor supply controlled rectifier
V703A/B	5751	A, bridge control; B, momentary overcurrent limiter
V704A/B	5726/6AL5W	Servo data rectifier
V705A/B	5726/6AL5W	A, bridge rectifier; B, V703B threshold control
V706	5727/2D21W	Sustained overcurrent limiter

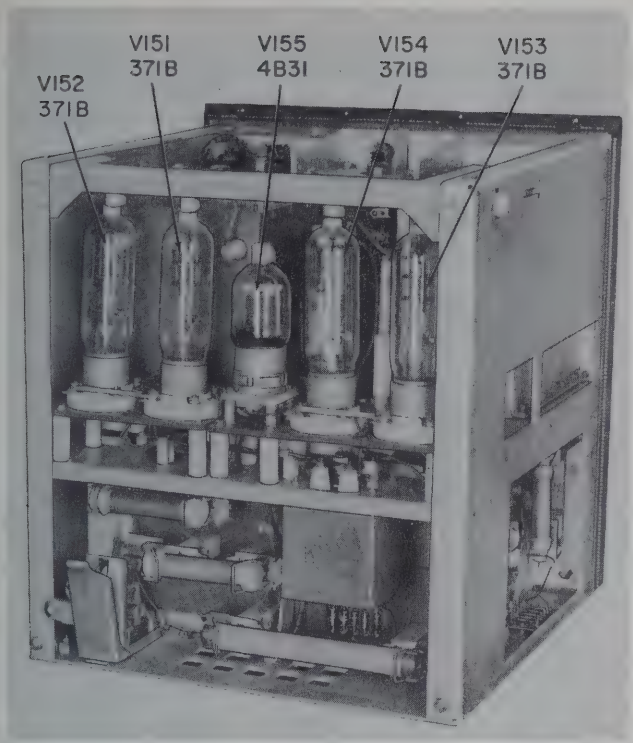

Figure 5—3. Radar Modulator Tube Locations (Rear of Chassis)

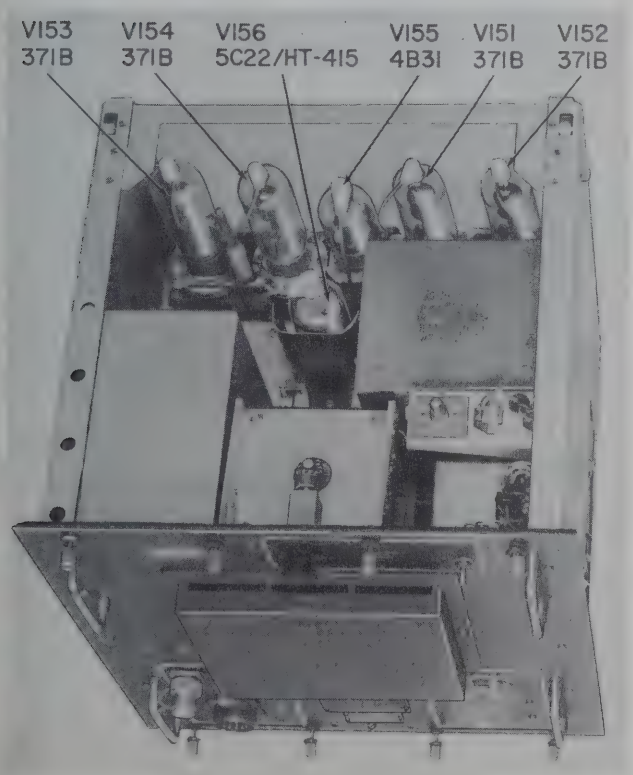

Figure 5—4. Radar Modulator Tube Locations (Top Side)

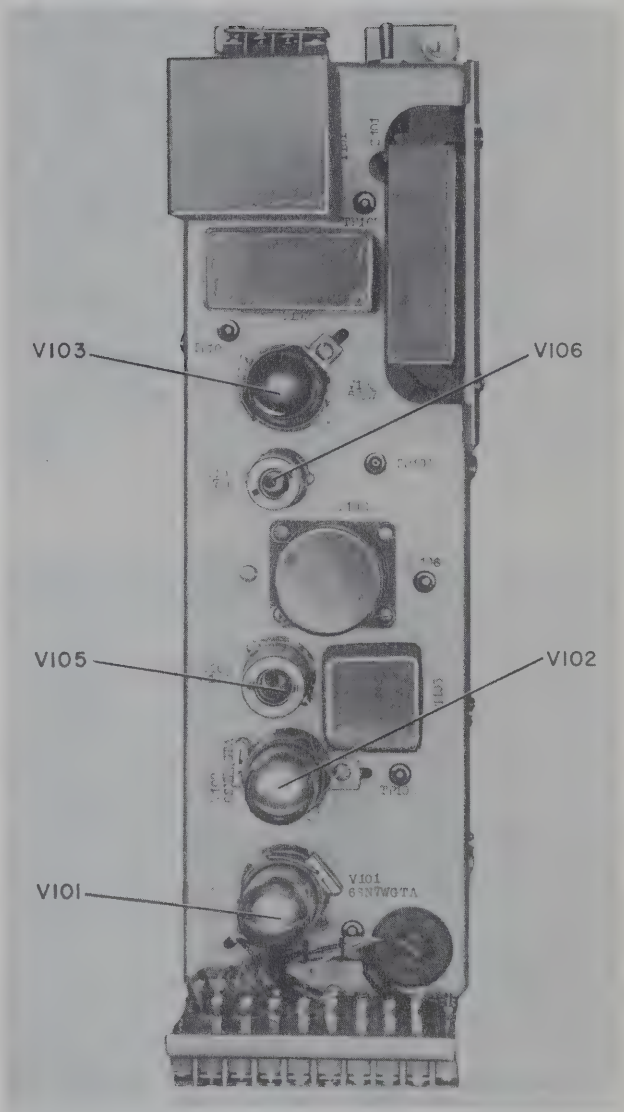

Figure 5—5. Radar Modulator Trigger Chassis Tube Locations

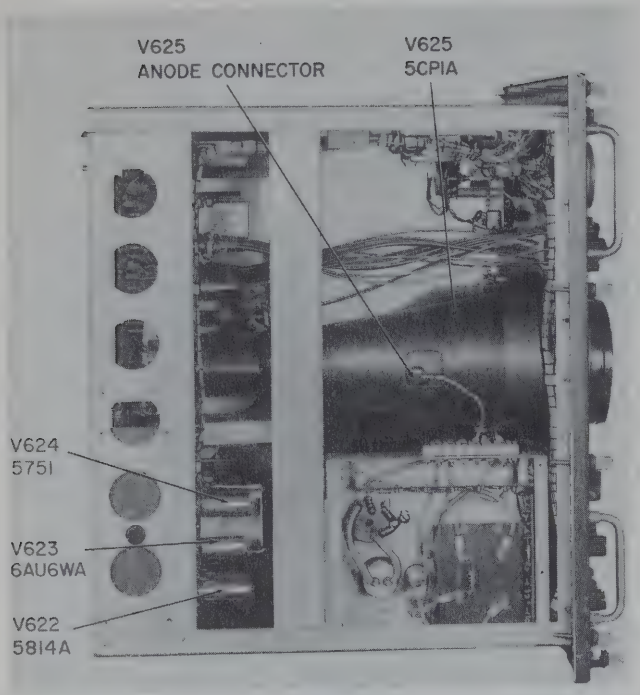

Figure 5—6. Azimuth and Range Indicator Tube Locations (Left Side)

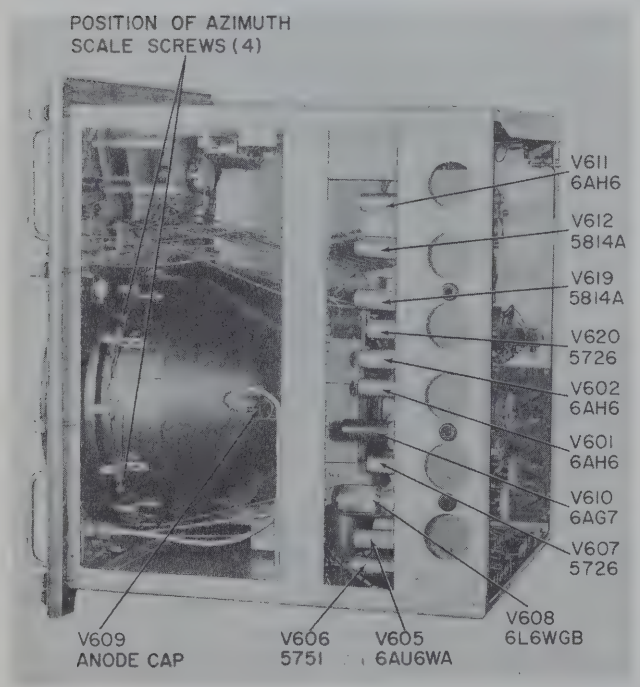

Figure 5—7. Azimuth and Range Indicator Tube Locations (Right Side)

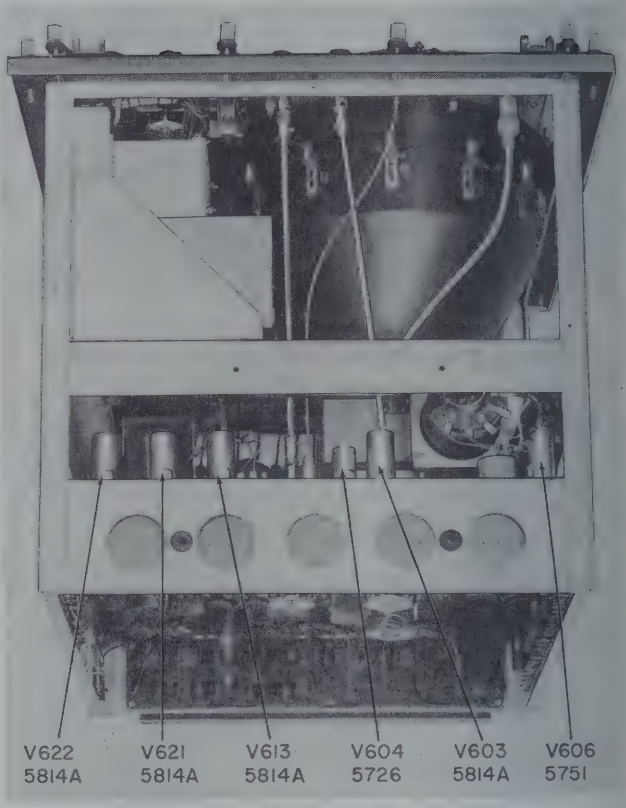

Figure 5—8. Azimuth and Range Indicator Tube Locations (Bottom Side)

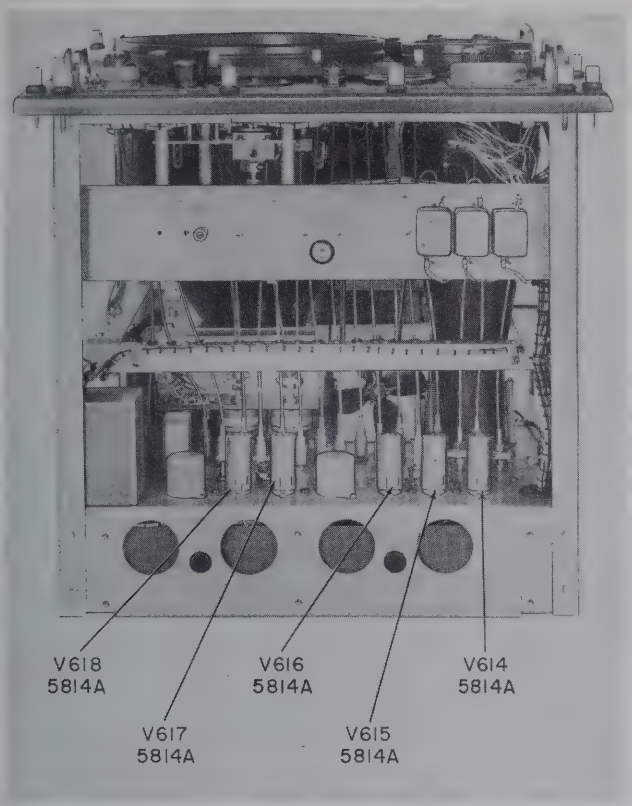

Figure 5—9. Azimuth and Range Indicator Tube Locations (Top Side)

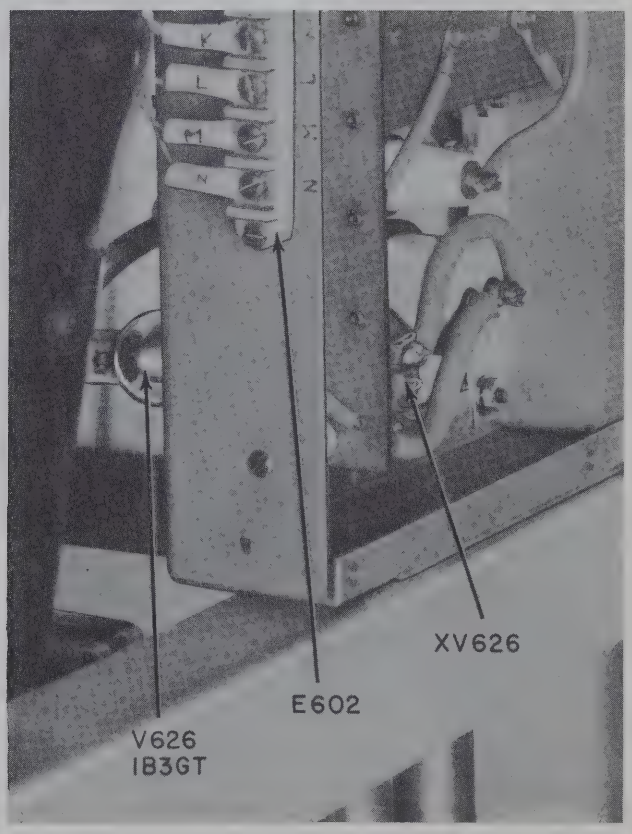

Figure 5—10. Azimuth and Range Indicator High-Voltage Rectifier Location

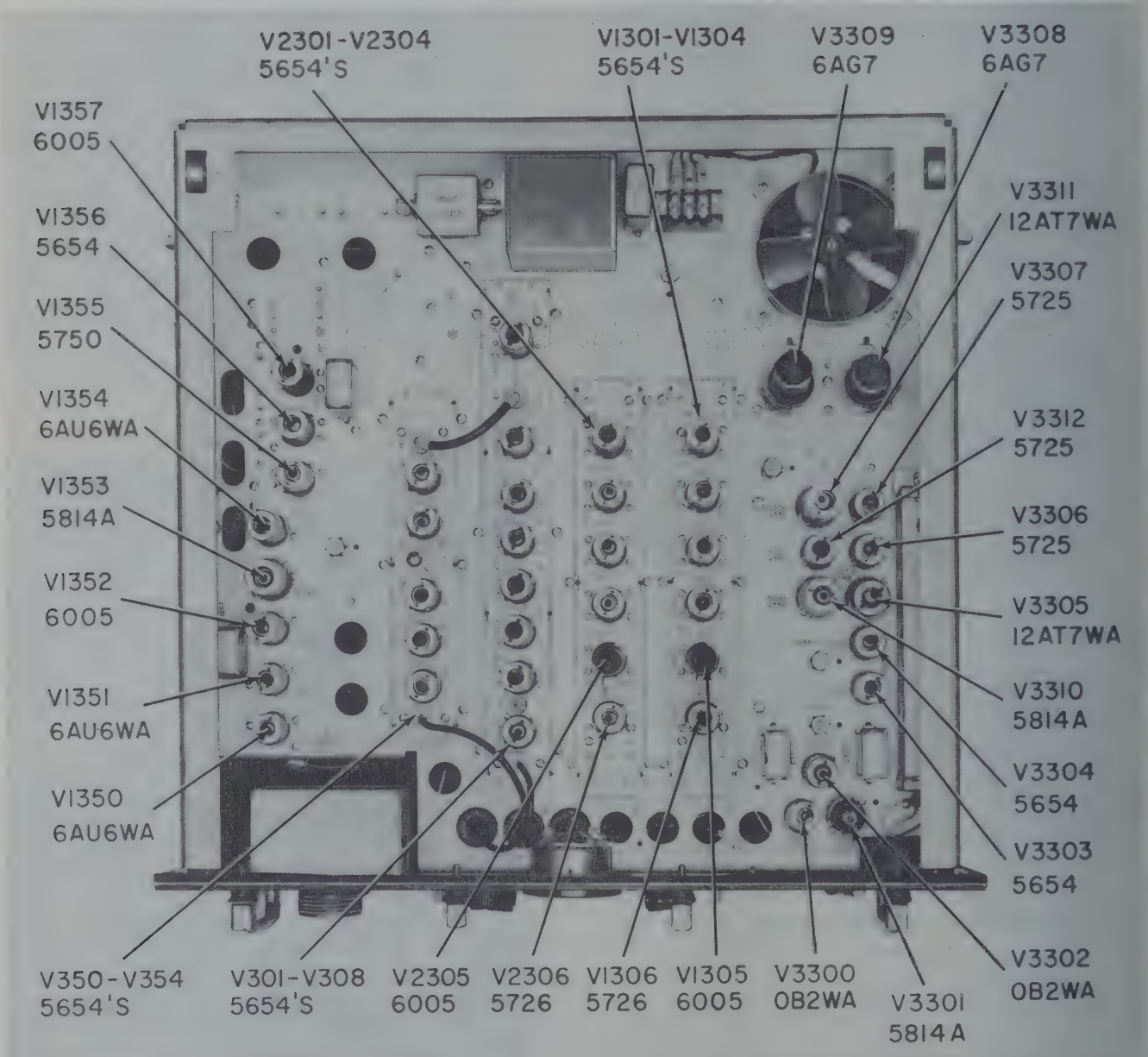

Figure 5—11. Signal Comparator Tube Locations

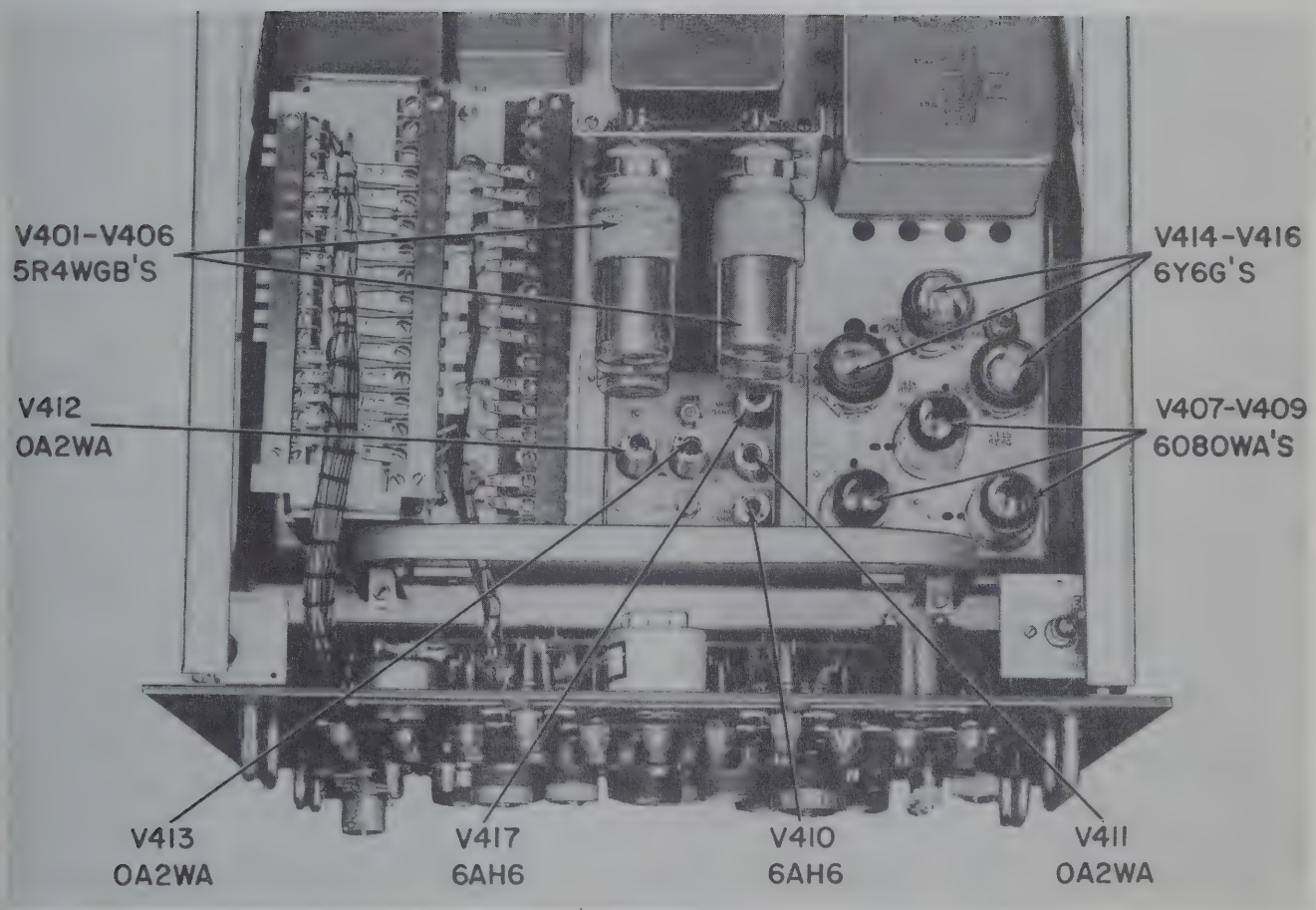

Figure 5—12. Power Supply Tube Locations

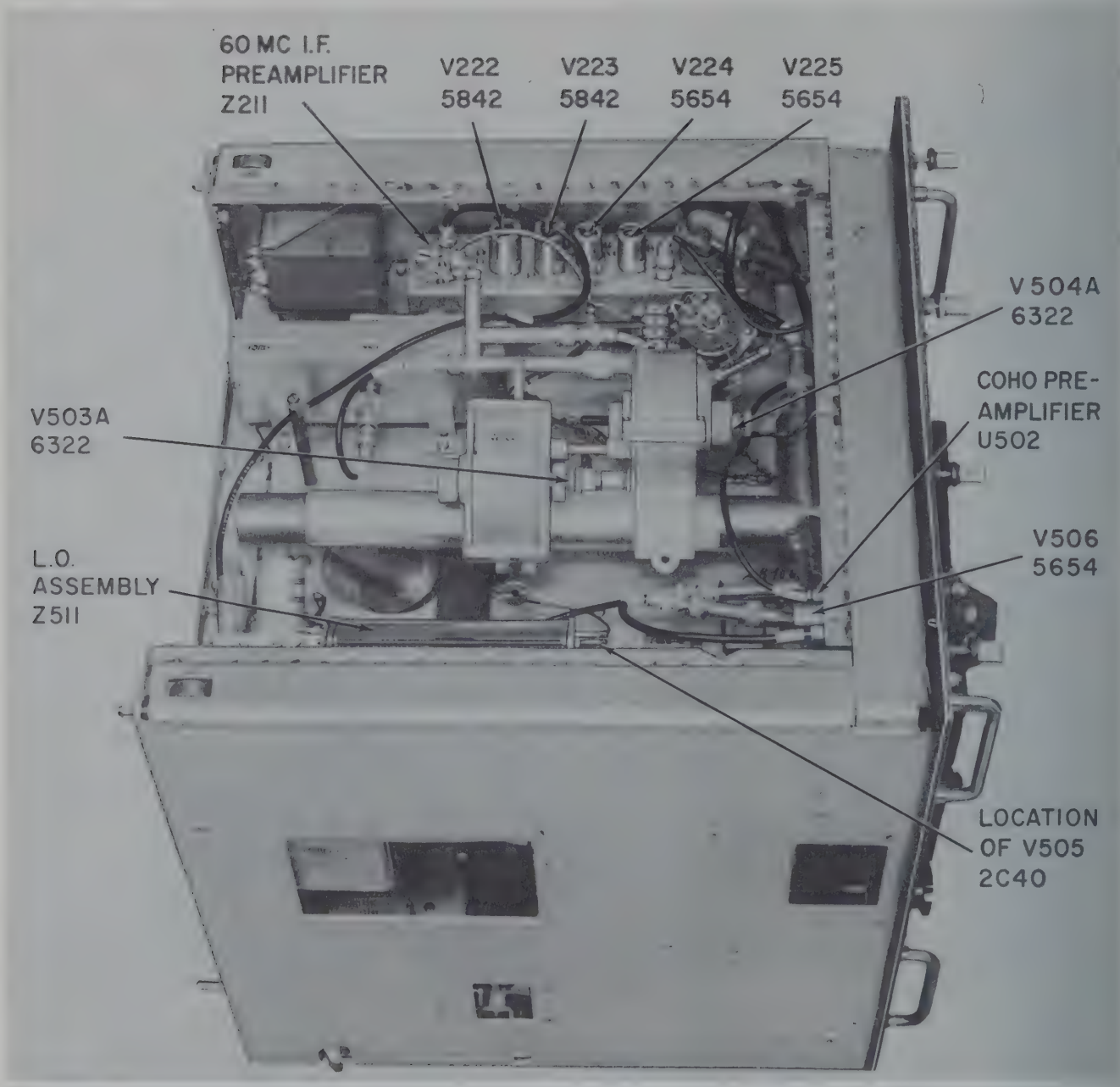

Figure 5—13. Radar Receiver-Transmitter Tube Locations (Bottom Side)

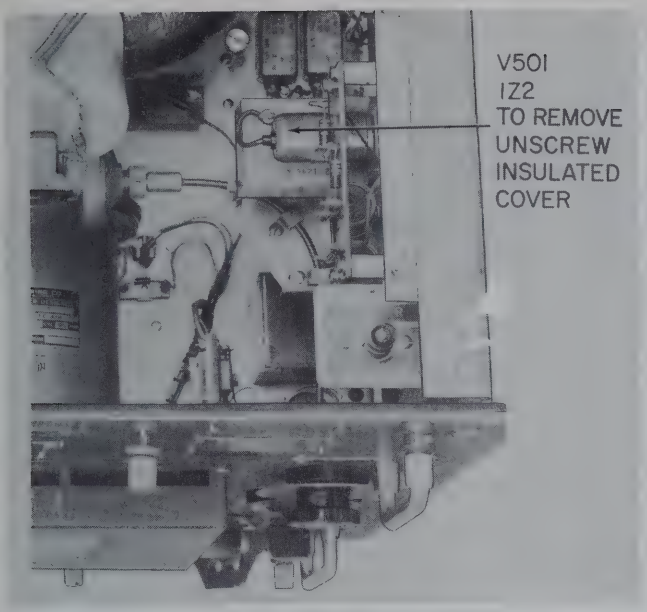

Figure 5—14. Radar Receiver-Transmitter (Top Side): Location of Keep-Alive Rectifier Tube

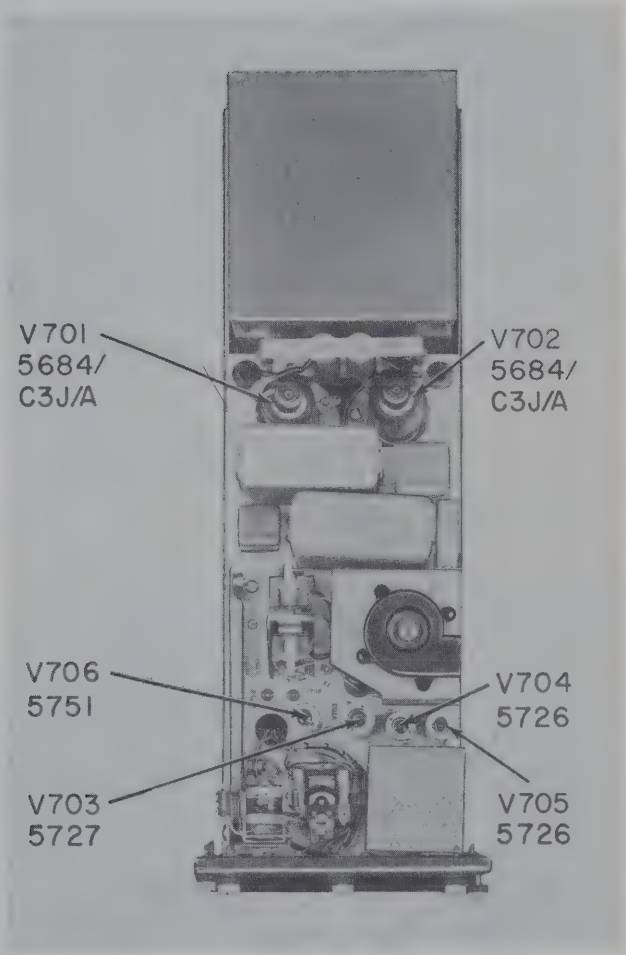

Figure 5—15. Servo Amplifier Tube Locations

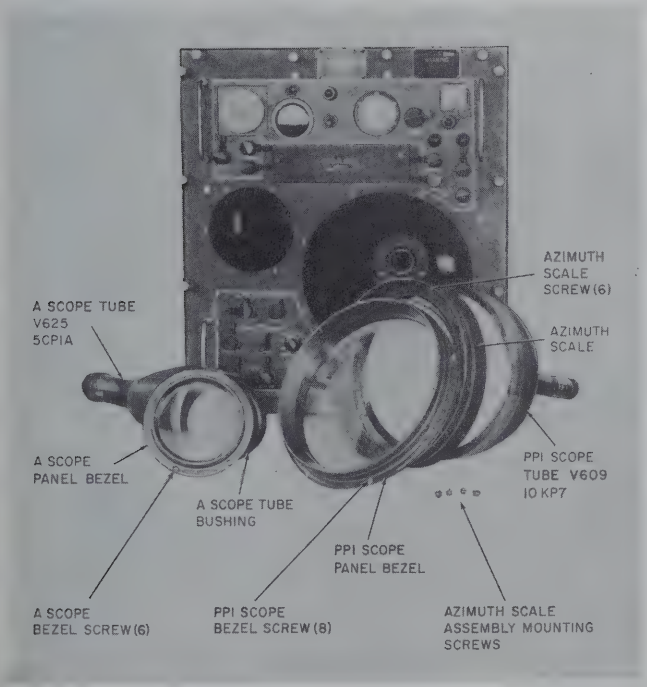

Figure 5—16. Azimuth and Range Indicator Scope Tube Replacement

CATCH NORMAL

CATCH RELEASED

Figure 5–17. Chassis Catch and Catch Release

SECTION 6
PREVENTIVE MAINTENANCE

1. GENERAL.

Preventive maintenance consists of periodic inspection, general cleaning, cleaning and tightening of contacts, and overall checking of equipment performance. This work is performed by both the operator and the technician. If the operator and the technician follow the schedule outlined in table 6–1, peak equipment performance can be maintained with less likelihood of failure.

During use of the equipment, the operator should note any irregularities in normal operation. If any abnormality is noticed which cannot be corrected by adjustment, he should report all details immediately to the technician. In this way, troubles can often be detected and remedied before breakdown occurs.

Because of the nature of the MTI system, minor troubles in equipment operation are quite apt to become more quickly apparent when MTI is in use. For example, poor contacts in the RF system usually cause flickers of clutter signals to appear. If the poor contact is in a circuit carrying transmitted power, serious damage could ultimately occur because of the high power in use. Thus, in a sense, the MTI constitutes a sensitive detector of some early-stage breakdowns which might go unnoticed with normal radar operation. From a preventive maintenance standpoint, the use of the MTI may well result in fewer interruptions because the MTI will readily exhibit signs of faulty operation if certain maintenance items connected with both MTI and normal radar operation have been neglected.

2. GAINING ACCESS TO UNIT CHASSIS.

See Section 5, paragraph 3.*b.*(4).

CAUTION

When opening the signal comparator unit, do not pull it out beyond its stops without first disconnecting the cables to the pulse delay network mounted beneath the unit chassis.

3. GAINING ACCESS TO ANTENNA ON FIELD INSTALLATIONS.

(See figure 3–1.)

To check the antenna, proceed as follows:

a. Loosen the ropes attached to the four corners and sides of the tent fly so that it may be pulled upward to the bottom of the antenna.

b. Climb the tower on either side and unfasten the zipper on the entrance side of the tent and also the two adjacent zippers at the top of the antenna base unit.

c. Pull out the aluminum tent retaining rod (on the entrance side) which secures the top of the tent to the antenna base unit.

d. Pull up the fly so that access can be gained through the opening now present in the top of the tent.

e. Reverse the procedure to return the tent to its original condition.

4. INSPECTION.

Some of the entries in table 6–1 call for inspection of units. Considerable importance should be attached to this form of preventive maintenance. Often the beginning of eventual trouble is indicated by signs of overheating (discolorations, drops of impregnation material, etc.), signs of arc-overs, etc.

When inspecting a unit, give all parts careful scrutiny. Besides the items already mentioned, inspect for the following:

Dirty relay contacts
Loose connections

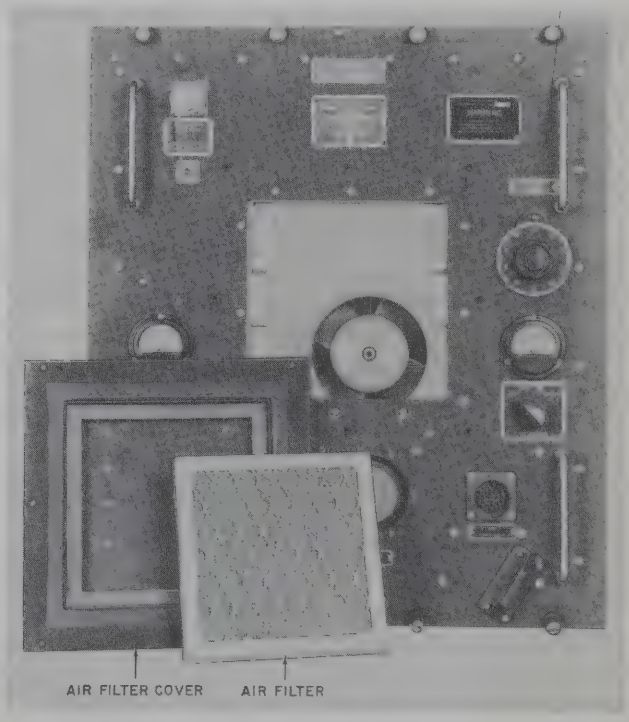

Figure 6–1. Panel Air Filter Arrangement

TABLE 6—1. ROUTINE CHECK CHART

WHAT TO CHECK	HOW TO CHECK	PRECAUTIONS AND REMARKS
	WEEKLY	
All antenna fittings	Open top of tent (see para. 3, this section) and check for hand-tightness.	Fittings include coaxial lines, reflector fittings, (12) and antenna mounting bolts (4). *Always check these items after severe windstorm.*
Tower	Check level of tower by spirit level mounted on frame of Antenna Base (see fig. 3—7).	Re-level as required, using guy-wire turnbuckles. *Turnbuckles should be tightened only sufficiently to make tower steady with Antenna rotating.*
Mounting Base jacks	Using jack tool, turn jacks at all four corners to check weight distribution.	Try to equalize weight by "feel" of turning effort. Be sure to check level first (see above). Do not turn jacks any more than necessary.
Interunit locking pins (24) in tower legs	Inspect for looseness and secure any loose pins.	
	MONTHLY	
All units	Clean and inspect (see paragraphs 2 through 5, this section).	Air filters may require more or less frequent cleaning, depending on the dust conditions of the particular location.
All fuses	Check as in paragraph 6, this section.	
All relays	Check as in paragraph 8, this section.	
All interconnecting cables	Check as in paragraph 9, this section.	
Operating time of all tubes and crystals	See paragraph 7, this section.	
Thyratron Tube (V156)	See Section 7, paragraph 5.*a.*	Replace if defective.
Antenna Base lubrication points	See paragraph 12, this section, and Table 6—4.	
	BI-MONTHLY	
Spare tubes	See paragraph 10, this section.	See Section 5 for tube locations and functions.

Loose bolts and nuts
Loose tubes
Loose tube caps, including scope anode connectors
Broken standoff insulators
Cracked resistors or molded capacitors
Cracks in the unit frame weld joints
Loose pieces of metal fragments, wire, solder, etc. (most apt to be present following repair)
Bare connections close to chassis or to other connections (e.g., socket lug connections)
Fungi and mildew (see paragraph 11).

Most of these defects are likely to be caused by excessive shock during transport. They will not necessarily be apparent on first inspection after setting up the equipment. However, strains present when the equipment is assembled as a tower and/or temperature changes may cause these defects to become apparent on subsequent inspections.

5. CLEANING.

a. GENERAL.

WARNING

Cleaning necessitates contact with circuits which, if accidentally energized, can cause serious injury. Cleaning should never be attempted until the power supply unit has been secured or all power has been otherwise removed from the equipment.

The major units of Radio Set AN/TPS-1G are best cleaned with a vacuum cleaner or with a clean cloth. (If compressed air is used, the air-stream should be carefully controlled so as not to blow fine particles of dust or foreign matter between relay contacts or adjacent terminal lugs.) High-voltage insulators can be thoroughly cleaned with a clean, lint-free cloth and carbon tetrachloride, or solvent, dry cleaning (SD), but should be wiped dry after cleaning. Oil and dust must be removed from both the inside and the outside of the unit cases.

b. TERMINAL STRIPS.

As some of the terminal strips in this equipment are mounted horizontally, dirt and other foreign matter can, by settling between adjacent connections, create troublesome shorts. Special attention must therefore be given to terminal strips to see that they are kept clean. The use of a stiff brush (non-metallic) and a clean, dry cloth will eliminate the possibility of this kind of trouble. At the same time, the terminal screws should be checked for tightness.

c. TUBES.

A clean, dry cloth will usually suffice to remove dust from tubes. Be very careful to clean all tubes that operate at high temperature, as a layer of dust interferes with heat radiation and raises the operating temperature of the tube envelopes.

To clean tube pin and tube socket contacts, work each tube up and down in its socket two or three times. This usually is sufficient to keep the contacts burnished. The large tubes in the modulator require turning to clean their contacts. If a noisy tube develops and this procedure does not cure it, remove the tube from its socket and carefully clean the base pins with a small knife blade. Do not use an abrasive such as crocus cloth, as particles of abrasive material may be left on the pins.

Before closing a unit, make sure that all tubes are seated firmly in their sockets and that socket clamps or tube shields are secure.

d. TOUCHING UP AND REFINISHING.

As soon as possible after discovering exposed metal on any of the cases, frames, or antenna parts, touch up or refinish as required.

CAUTION

When painting metal surfaces of the antenna, make certain that no paint is applied to the nozzle cover. Also be sure that no paint runs into the joints of the RF coaxial fittings.

The procedure for refinishing small or large areas is as follows:

(1) Using medium-fine sandpaper, clean the area.

Note

Sand the area back to solid paint and feather the paint edge leading to exposed metal.

(2) Wipe the area clean and apply one coat of zinc-chromate primer, Spec. JAN-P-735 (Stock No. 52-P-20630-2, 1-gal. size.)

(3) Apply two finish coats of Marine Corps Green Enamel per Spec TT-E-485 type II.

Note

The color of Spec. TT-E-485 Type II may vary slightly from that of the original paint.

e. CLEANING AIR FILTERS.

The accumulation of lint and dirt on the oiled wire-mesh air filters reduces the air flow through the units on which they are used. Too great an accumulation, particularly on the intake filters, may cause unsafe temperature rises in the units. Frequency of cleaning will depend upon the operating atmosphere.

Under conditions of moderate dirt accumulation, the filters require cleaning every 500 hours. The monthly inspection as given in table 6—1 should give a good idea of the rate of dirt accumulation in a particular area.

To clean a filter, remove it from the unit as outlined below and wash it by moving it back and forth in dish-washing compound FSN GF7930-267-4932. Dry the filter and spray the mesh with lubricating oil, Spec. NS-3050, Stock No. 14-P-2662 or dip the filter in the oil. Drain off excess oil (preferably in warm atmosphere) and replace the filter. When oil cannot be

shaken from the filter, drainage is adequate. If there are numerous large openings in the mesh as compared with a new filter, discard the filter and install a new one.

Panel filters are removed by removing the eight cover screws (see figure 6–1). Case filters are removed by unlocking the four cover cam-loc fasteners shown in figure 6–2. The servo amplifier filter is held in place on the end of the blower housing by six screws and a plate (see figure 6–3). If the screen in the side of the servo amplifier is dirty, clean it from the inside with a brush or compressed air.

Filters and their locations are as follows:

UNIT	FILTER LOCATION
Modulator	Front panel (intake)
Modulator	Top and bottom, inside case (exhaust)
Signal comparator	None used
Indicator	None used
Power supply	Top of case (exhaust)
Power supply	Bottom of case (intake)
Receiver-transmitter	Front panel (intake)
Receiver-transmitter	Top and bottom of case (exhaust)
Antenna base	Rear top of servo amplifier case (intake)

f. CASE AIR VALVES.

All of the six case units (including Case CY-1060/TPS-1D) have air valves which permit the cases, when sealed by their covers, to breathe (see figure 6–4). The valves contain a ceramic disk which permits the passage of air but excludes moisture.

The only maintenance required is that of checking the tightness of the valve in the case and also checking the ceramic disk for contamination. This is preferably done when the equipment is being dismantled prior to transport.

The valve is secured to the case by a nut on the inside of the case. An "O" gasket between the valve and the case effects a seal of the mounting hole. Make sure that the holes in the top of all valves are clear and that all ceramic disks are also clear. If it is necessary to paint the case at any time, make sure that paint does not enter the openings. If the disk becomes contaminated, replace the entire valve.

6. FUSE MAINTENANCE.

Corrosion is probably a major factor in the failure of small fuses (under 5 amperes). Even when the fuse wire is not corroded through, the cross-section may be reduced enough to cause failure at a lower-than-rated current. For this reason, spare fuses in the tropics or semitropics should be stored in airtight containers.

Fuse ends are subject to corrosion, which increases circuit resistance. All fuses should therefore be removed periodically from their holders, and corrosion and dirt cleaned off.

A clean cloth moistened with solvent 140F per MIL-S-16067 (F.S.N. W6850-274-5421) will usually suffice,

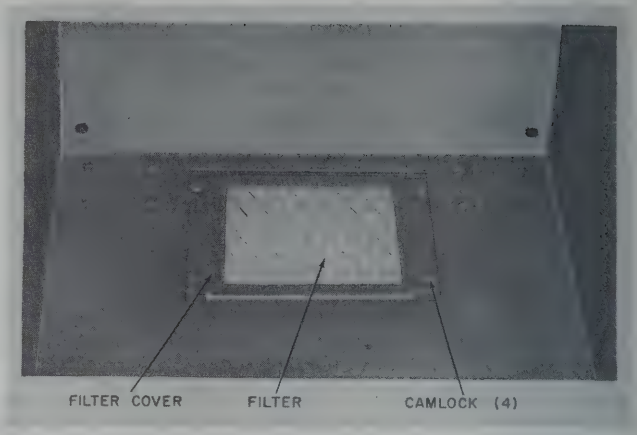

Figure 6–2. Case Filter Replacement

but in some cases crocus cloth or fine sandpaper may be required. Wipe the fuses with a clean, dry cloth before replacing them in their holders. The spare fuses should also be checked.

7. TUBE AND CRYSTAL REPLACEMENT.

a. GENERAL.

The expected life of all tubes, with the exception of type 6322 tubes (V503A and V504A), is approximately

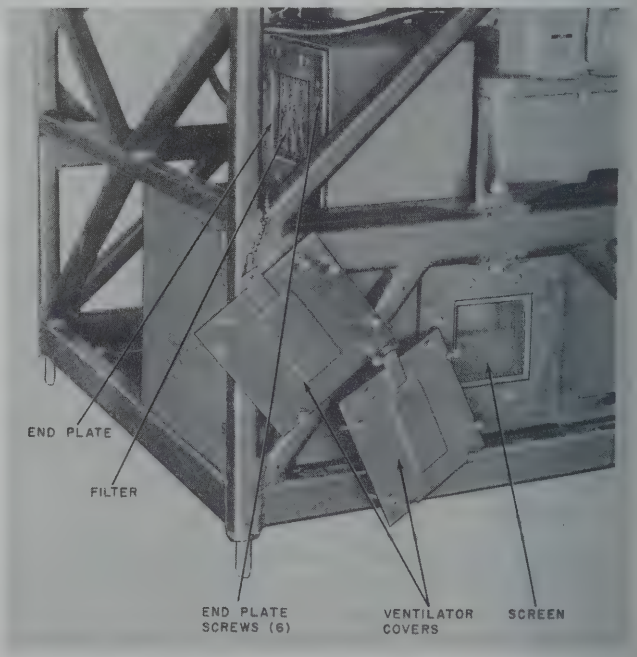

Figure 6–3. Servo Amplifier Air Filter and Screen

Figure 6—4. Case Pressure Relief Valve and Air Filter

500 hours. Standard-type receiving tube (miniature and octal) and scope tubes average better than 2000 hours of life. Special tubes (triode oscillator, magnetron, etc.), power tubes (high-voltage rectifiers, thyratrons, etc.), and type 1N21B and 1N21C crystals have a life expectancy of 1000 hours or more. (See table 6—2.)

It is imperative that V503A and V504A (receiver-transmitter unit) be replaced as soon after 500 hours as possible. Misfiring of these tubes causes crystal damage which results in either a reduction in sensitivity or a complete loss of signals. If it is essential that equipment failures due to tube failure be minimized, use the lower time limits given in table 6—2; otherwise, replace tubes at the upper time limits. Do not allow tubes to remain in the equipment after the upper time limit as there is good possibility of several such tubes failing in rapid succession. Crystals may be replaced any time during the 1000—1500-hour period or replaced when the crystal current cannot be maintained by readjustment of local oscillator coupling.

The coho and signal crystals (CR502 and CR503) type 1N21B and 1N21C respectively, can be checked by Test Set TS-268/U. The forward resistance should not be greater than 500 ohms and the back resistance should be steady at a value greater than 8000 ohms.

The procedure for replacing all tubes, with the exception of V502 through V505 and the crystal mixers CR502 and CR503, is given in Section 5, paragraph 3*b*. The replacement procedures for these latter tubes and crystals are given directly below.

b. LOCAL OSCILLATOR TUBE (V505) REPLACEMENT. *(See figures 6—5 and 6—6.)*

The need for V505 replacement may be indicated by inability to obtain redline readings for both coho and signal mixer crystal currents or by unstable MTI operation; see Section 7, paragraphs 9.*b.*(2)(*b*) and 9.*b.*(2)(*c*). Unsteady coho and signal mixer crystal currents may also be an indication of a defective local oscillator, if the condition cannot be attributed to some other cause such as unsteady local-oscillator filament or plate voltages.

The procedure for replacing V505 (type 2C40) is as follows:

(1) With the equipment shut down, pull the receiver-transmitter chassis out as far as the chassis catches.

(2) Loosen the seven dzus fasteners on the hinged portion of the bottom shield and open the access door as shown in figure 6—10.

(3) Remove the two knurled thumbnuts adjacent to the V505 socket XV505 (see figure 6—6).

(4) Withdraw the plate on which XV505 is mounted complete with V505 in its socket.

(5) Remove V505 from XV505 and install replacement tube (2C40) in XV505.

(6) Carefully insert the assembly straight into the L.O. tuned circuit assembly so as to engage the internal plate and grid contacts.

(7) Replace and secure the two knurled screws.

(8) Adjust the local oscillator as given in Section 7, paragraph 9.*b.*(2)(*d*).

c. MAGNETRON (V502) REPLACEMENT. *(See figure 6—7.)*

CAUTION

Remove your wrist-watch before replacing the magnetron. The magnetron mounting contains a strong magnet which will damage a watch brought near its field.

(1) Withdraw the chassis from its case as far as the chassis catch.

(2) Remove the flexible frequency control shaft by

TABLE 6—2. TUBE AND CRYSTAL REPLACEMENT SCHEDULE

TUBE SYMBOL	TUBE TYPE	REPLACE AFTER
V503A and V504A	6322 (TR)	500—1000 hours
V505	2C40 (local oscillator)	1000—1500 hours
V502	5J26 (magnetron)	1000—1500 hours
V156	5C22 (thyratron)	1000—1500 hours
V151—V154	371B (high-voltage rectifier)	1000—1500 hours
V155	4B31 (high-voltage rectifier)	1000—1500 hours
CR502 (crystal)	1N21B (coho mixer)	1000—1500 hours
CR503 (crystal)	1N21C (signal mixer)	1000—1500 hours
	All receiving-type and scope tubes	2000—3000 hours

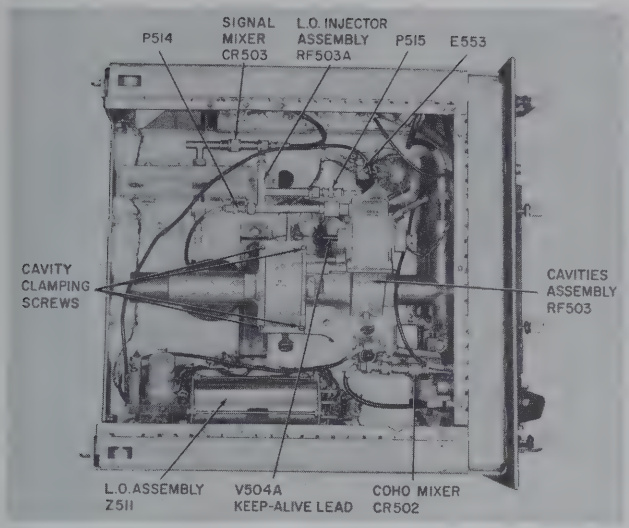

Figure 6—5. Receiver Crystal and Special Tube Replacement

loosening the knurled coupling which attaches the flexible shaft to the magnetron (see figure 6—7).

(3) Remove the two-pin heater jack panel from the glass end of the magnetron.

(4) Loosen the output connector fitting of the magnetron by working through the rectangular access on the right side of the unit and using the magnetron tool provided in the lower compartment of Case CY-1060/TPS-1D. (See figure 6—8.)

Note

Loosen only the one ring nut towards the magnetron. The other ring nut secures the output fitting to the chassis.

(5) Carefully withdraw the magnetron, taking care to prevent the end of the magnetron from being sucked against a pole-piece of the magnet.

(6) Before inserting the new magnetron into the output connector mounting, rotate the frequency adjustment gearing so that the marks on the center and intermediate gear are aligned. (This is the mid-band frequency of the magnetron, or 1285 Mc for the type 5J26 tube.)

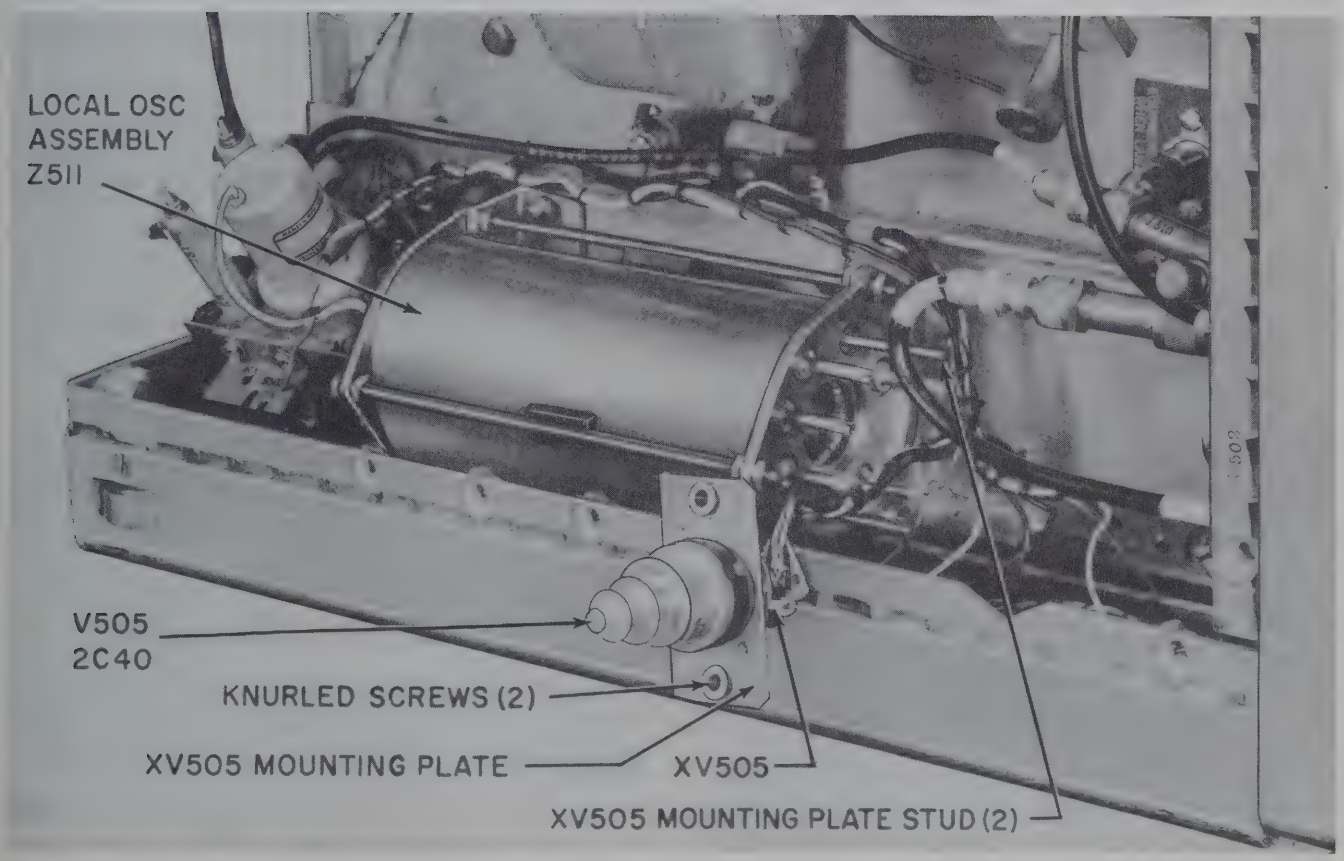

Figure 6—6. Local Oscillator Tube Replacement

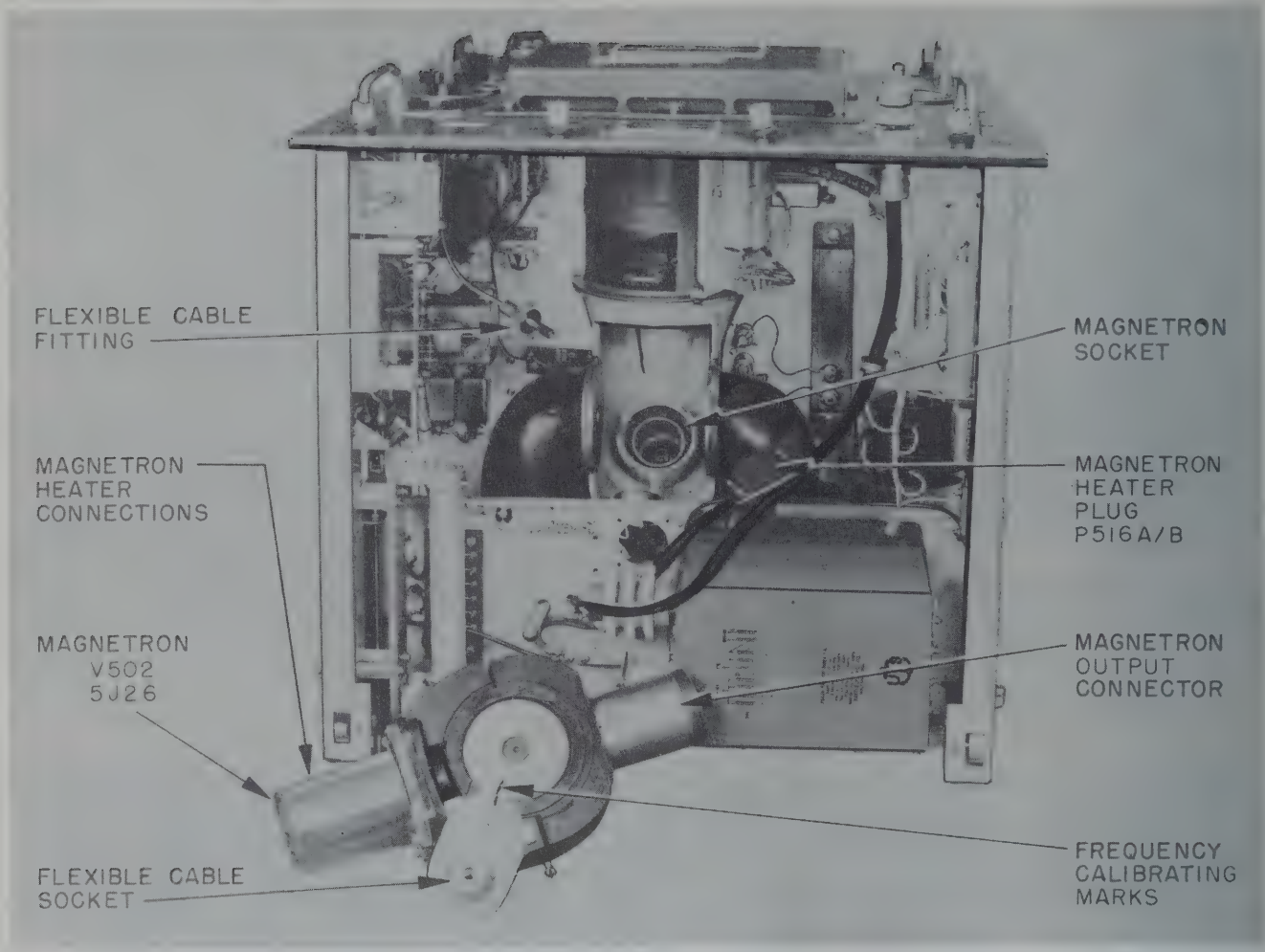

Figure 6–7. Magnetron Replacement

(7) Carefully insert the magnetron into the output connector with the frequency adjustment fitting toward the right side of the unit.

(8) Position the sides of the magnetron evenly and squarely between the magnet pole-pieces, and securely tighten the output connector ring nut.

(9) Turn the MAGNETRON FREQUENCY dial on the unit panel to 500 (5 on top dial and 0 on large dial), and insert the flexible cable fitting into the frequency adjustment fitting on the side of the magnetron. (If necessary, turn the flexible cable slightly to mate the fitting.)

(10) Thread and tighten the knurled cable fitting to the side of the magnetron.

(11) Plug the two-pin heater jack into the magnetron heater connections.

(12) Energize and tune up magnetron as given in Section 7, paragraph 9.*b.*(3).

CAUTION

A new magnetron requires aging and frequency adjustment as outlined in Section 7, paragraph 9.*b.*(3)(*b*). Always follow these instructions when applying power to a new magnetron.

d. CAVITIES ASSEMBLY TR TUBE (V503A AND V504A) REPLACEMENT. *(See figure 6–9.)*

To replace either V503A or V504A (type 6322), proceed as follows:

(1) Pull the receiver-transmitter chassis out as far as the catches and open the hinged portion of the bottom shield (secured by seven dzus fasteners; see figure 6–10).

(2) If V504A is being replaced, remove the keep-alive lead to the cap connection of V504A (see figure 6–9).

(3) Remove the two knurled ring clamps in the center of the cavity (see figure 6–9).

Note

If the clamps cannot be turned, slightly loosen the four captive screws which bolt the cavity halves together.

(4) Loosen the four captive cavity screws, remove the outer half of the cavity, and then remove the TR tube.

(5) Select the proper type 6322 TR tube (supplied with short and long tuning shanks).

Note

The TR tube with the longer tuning shank goes in the V503A position. If a replacement 6322 tube with a short tuning shank is used, and a long shank is needed, remove the tuning shank from the old tube and use on the new tube.

(6) Carefully wipe the contact surfaces and the glass between the flanges of the TR tube with a clean, dry cloth.

(7) Carefully install the TR tube in the cavity half attached to RF501 in the unit.

Note

The tubes are installed with the tuning knob towards unit panel and with the cavity contact surfaces between the tube flanges so that the ring clamps will press the flanges against these surfaces.

(8) Carefully replace the outer cavity half and tighten the four captive cavity screws.

(9) Replace and hand-tighten the two knurled ring clamps at the center of the cavity.

(10) Tune the cavity for maximum signals as given in Section 7, paragraph 9.*b*.(2)(*a*).

e. SIGNAL MIXER CRYSTAL (CR503) REPLACEMENT. *(See figure 6—11.)*

To replace the signal mixer crystal, proceed as follows:

(1) Loosen the front panel captive screws and withdraw the unit forward until the chassis catches prevent further withdrawal. Loosen dzus fasteners securing the forward section of the hinged shield.

(2) Disconnect cable W502 from the mixer at P/J512.

(3) Disconnect J512 from W503.

(4) Remove CR503, which is inserted into the open end of W503.

(5) Carefully wipe the contact surfaces of the replacement crystal (1N21C) with a clean, dry cloth, and insert the crystal into the end of W503, being careful to align the crystal pin contact with the fitting in W503.

CAUTION

Do not apply pressure to the end of the crystal until it is certain that the contacts are in alignment.

(6) Carefully wipe the contacts in the crystal end of J512 with a clean, dry cloth.

(7) Attach J512 to W503 and then reconnect P512 to J512.

Note

Make certain that the alignment pins on J512 fit into the slots provided, otherwise no crystal current will be available.

(8) Replace the hinged shield.

(9) Check and adjust the crystal current as outlined in Section 7, paragraph 9.*b*(2)(*c*).

f. COHO MIXER CRYSTAL (CR502) REPLACEMENT. *(See figure 6—12.)*

To replace the coho mixer crystal, proceed as follows:

(1) Open the front hinged portion of the shield beneath the unit (see figure 6—10).

(2) Disconnect J511 from E504.

(3) Disconnect J511 from RF502.

(4) Remove the crystal from the open end of RF502.

(5) Wipe the contact surfaces of the replacement crystal (1N21B) and carefully insert the crystal into RF502, being careful to properly engage the mixer assembly contacts with the small pin contact of the crystal.

CAUTION

Do not apply pressure to the end of the crystal until it is certain that the crystal contact is aligned with the mixer contact.

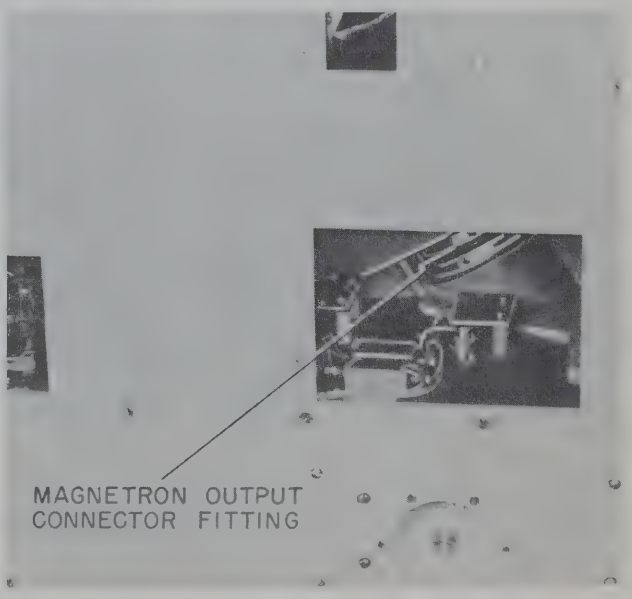

Figure 6—8. Magnetron Output Connector

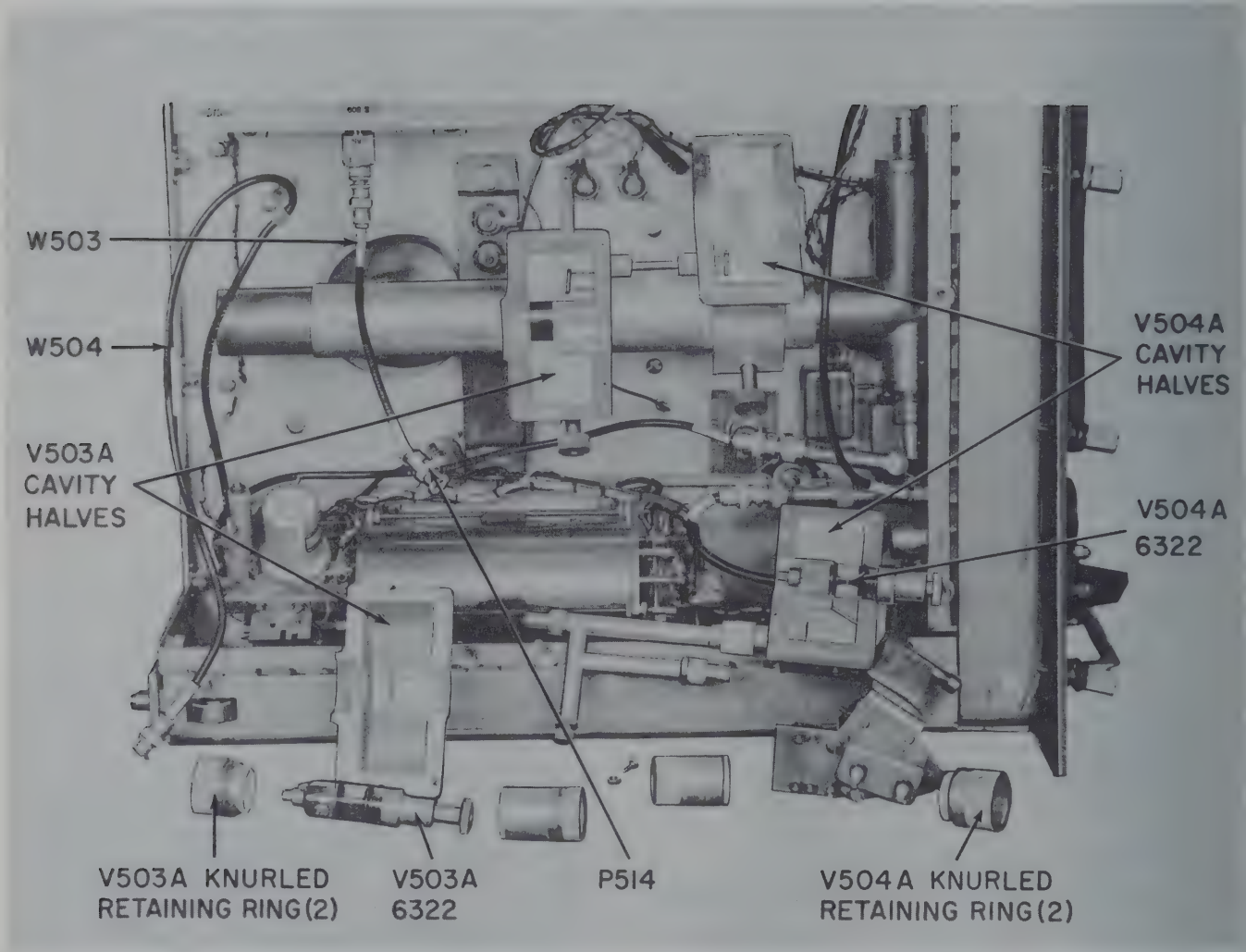

Figure 6—9. Cavities Assembly Tube Replacement

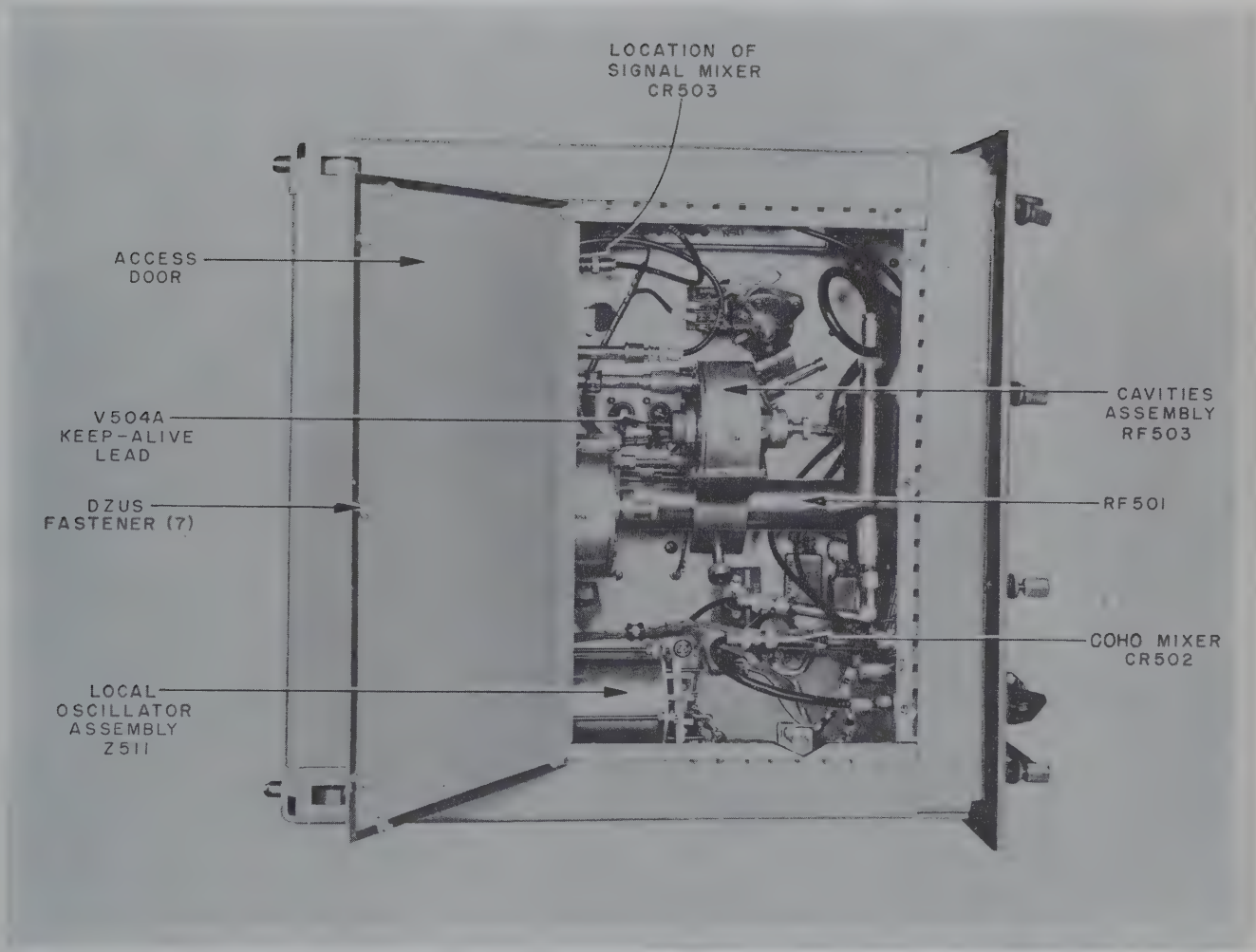

Figure 6—10. Access to Bottom of Receiver-Transmitter

(6) Connect J511 to RF502.

(7) Connect E504 to J511.

(8) Close and secure the shield beneath the unit.

(9) Check and adjust the coho crystal current as outlined in Section 7, paragraph 9.*b.*(2)(*b*).

8. RELAY MAINTENANCE.

Small relays, which handle only signal or trigger currents, are not liable to be pitted, as they have silver contacts that normally resist corrosion unless exposed to coal or oil smoke. These contacts can be very satisfactorily cleaned by burnishing. Use a tool which has a very thin blade impregnated with fine diamond dust, which can be inserted between the relay contacts so as to clean and polish the contacts while in approximately their normal closed position.

If the contacts should become badly pitted or burned, it may not be possible to remove the burned portion with the burnishing tool. In this case it will be necessary to use a fine file to eliminate the pits. The contact surfaces must be kept parallel and slightly convex to preserve the normal wiping action. After the pits have been removed, the contact surfaces should be polished with the burnishing tool.

The following is a check list of equipment relays:

UNIT	RELAYS
Modulator	K151A/B and K152
Indicator	None
Signal comparator	K3300 and K3301
Power supply	K401*, K402, K403, and K405
Receiver-transmitter	K501, K502*, and K503
Antenna base (servo amplifier)	K701, K702A/B, K703, K704, and K705

*Relays are hermetically sealed or consist of microswitches which cannot be cleaned.

The locations of these relays are given under component locations in Section 7.

9. CABLE CHECK.

Multiconductor and coaxial cables should be inspected for damage at any point in the run where the cable is subject to damage from excessive heat or other abuse. Particular attention should be given to coaxial cables, which are easily damaged by dents or sharp bends. All

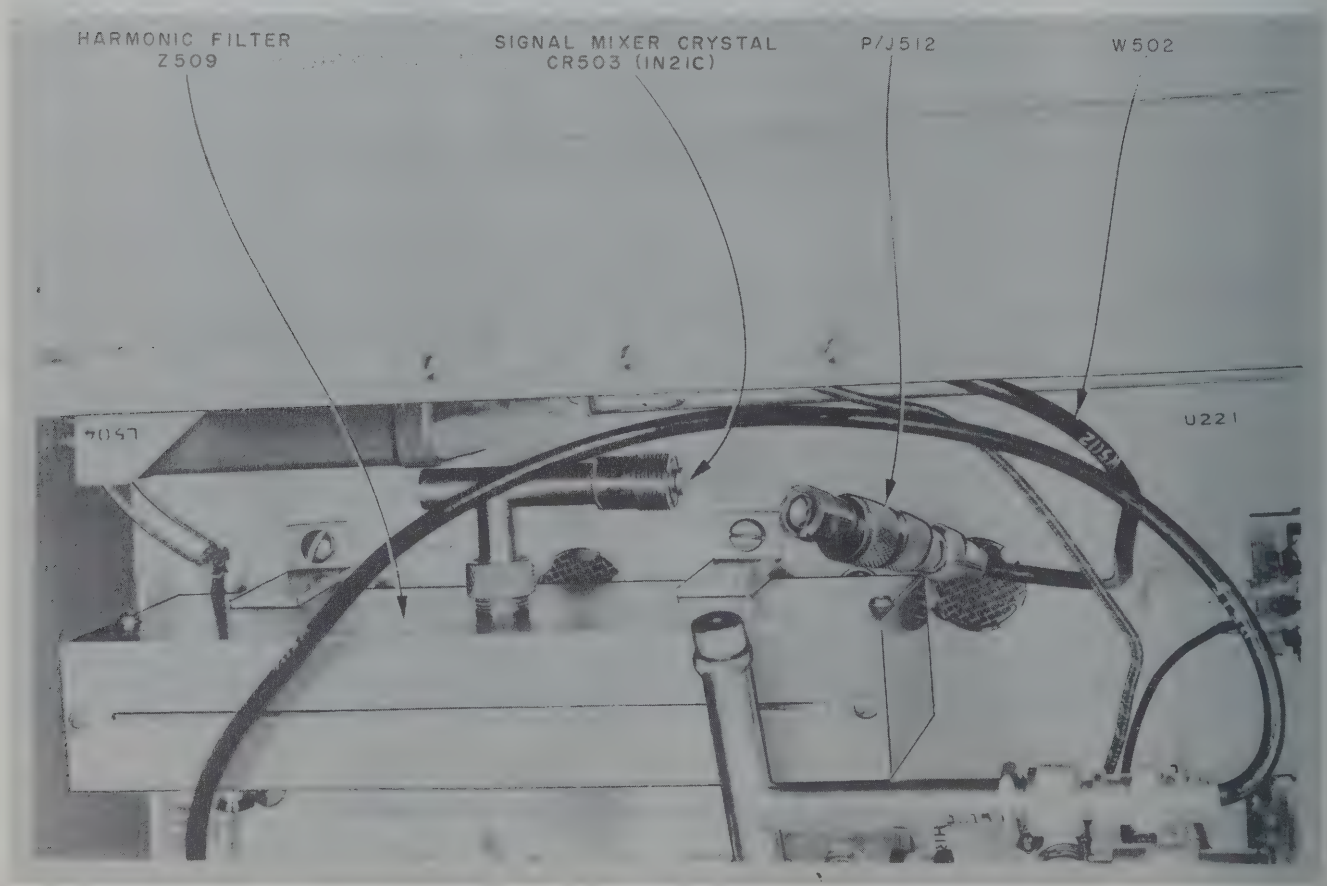

Figure 6—11. Signal Mixer Crystal Replacement

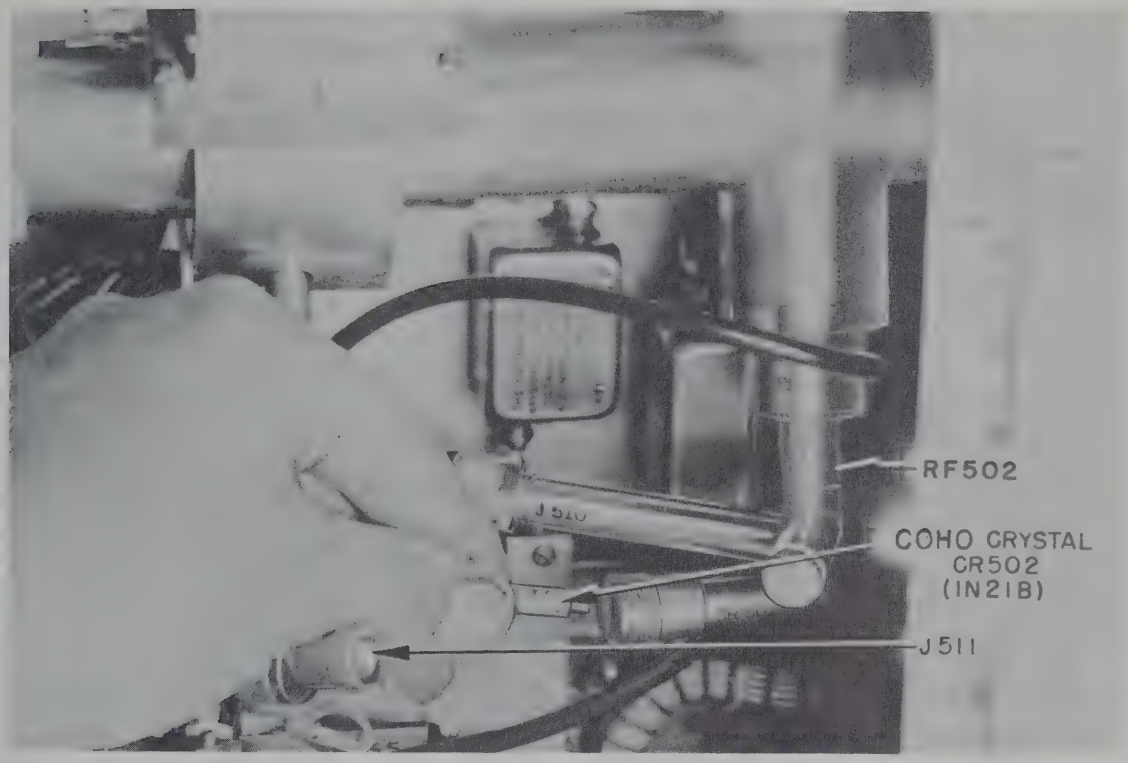

Figure 6–12. Coho Mixer Crystal Replacement

cable connectors should be checked for freedom from corrosion and for tightness of contacts.

Contacts should be cleaned with a clean, dry cloth. If corrosion cannot be removed in this manner, use a small knife blade with light pressure, followed by wiping with a clean, dry cloth. Do not use abrasive materials or solvents, as these materials tend to leave a residue.

10. SPARE TUBE CHECK.

To prevent the possibility of replacing a tube which has failed in the equipment, with a defective tube from reserve parts, it is recommended that tested spare tubes be provided. It is not necessary to have a full complement of tested spares, as the probability of having all tubes fail at one time is extremely small.

The left column of table 6–3 indicates the number of tested spares which should be kept on hand for each unit. These figures are based not only on the total number of tubes of each type in use but also on the probability of tube failures in view of the type of service. For example, a tube drawing more plate current than that of another tube of the same type may be likely to fail sooner because of low emission, etc.

In table 6–3, where the number of tube positions given is greater than the number of recommended tested spares, the tubes may be checked in any of the indicated positions. However, they should be checked in different sockets each checking period so that all positions are covered. As soon as possible after replacing a faulty tube, check out another tube so as to keep the tested spares up the minimum required number.

The suggested procedure for checking and maintaining tested spares is as follows:

a. Number all spare tubes and spare tube boxes with a suitable ink or paint.

b. Keep a spare tube log with the following headings:

(1) Tube number
(2) Tube type
(3) Date tested
(4) Unit and socket in which tube was tested
(5) Remarks (e.g., installed in XV606 — date)

c. Test no more than two or three tubes at a time so that a defective spare tube can easily be located by substitution.

Note

Make sure that all tubes are properly seated in their sockets before securing a unit.

Inasmuch as considerable time is required to check all tubes at one time, it is suggested that the tubes be checked in only one unit each week until all tubes have

TABLE 6—3. SPARE TUBE TEST CHART

MINIMUM RECOMMENDED NUMBER OF TESTED SPARES	TYPE	CHECK IN TUBE POSITIONS
	RADAR MODULATOR	
2	6SN7WGT	V101 and V102
1	6AG7	V103
1	5726/6AL5W	V106
1	5814A	V105
2	371B	V151, V152, V153 or V154
1	4B31	V155
1	5C22/HT-415	V156
	AZIMUTH AND RANGE INDICATOR	
2	6AH6	V601, V602 or V611
6	5814A	V603, V612-V619, V621 or V622
2	5726/6AL5W	V604, V607 or V620
2	6AU6WA	V605 and V623
2	5751	V606 and V624
1	6L6WGB	V608
1	10KP7	V609
1	6AG7	V610
1	5CP1A	V625
1	1B3GT	V626
	SIGNAL COMPARATOR	
10	5654/6AK5W	V301-V308, V350-V354, V1301-V1304, V1356, V2301-V2304, V3303, or V3304
2	6005	V1305, V1352, V1357 or V2305
2	5726/6AL5W	V1306 and V2306
2	6AU6WA	V1350, V1351 or V1354
2	5814A	V1353, V3301 or V3310
1	5750/6BE6W	V1355
2	OB2WA	V3300 and V3302
2	12AT7WA	V3305 or V3311
2	5725/6AS6W	V3306, V3307 or V3312
2	6AG7	V3308 and V3309
	POWER SUPPLY	
3	5R4WGB	V401-V405 or V406
2	6080WA	V407, V408 or V409

TABLE 6—3. SPARE TUBE TEST CHART (Cont.)

MINIMUM RECOMMENDED NUMBER OF TESTED SPARES	TYPE	CHECK IN TUBE POSITIONS
2	6AH6	V410 or V417
2	0A2WA	V411, V412 or V413
3	6Y6G	V414, V415 or V416
RADAR RECEIVER-TRANSMITTER		
1	2C40	V505 (see para. 7.b., this section)
2	5654/6AK5W	V224, V225 or V506
2	5842	V222 or V223
1	1Z2	V501
1	5J26	V502 (see para. 7.c., this section)
2	6322	V503A and V504A (see para. 7.d., this section)
1	7H-11 (Amperite)	TY501
ANTENNA BASE (SERVO AMPLIFIER)		
2	5684/C3J/A	V701 and V702
1	5751	V703
2	5726/6AL5W	V704 and V705
1	5727/2D21W	V706

been checked. This procedure permits the schedule to be repeated every two months so that all spare tubes can be checked bimonthly as given in table 6—1. Although the operating schedule might permit checking all spare tubes at one time, it is best to maintain the weekly schedule because it lends itself better to operations which may at times require nearly continuous use of the equipment.

11. RETROPICALIZATION.

a. GENERAL.

Retropicalization of internal surfaces and parts is an important part of preventive maintenance, especially in humid climates.

The frequency of retropicalization depends on equipment use and exposure to climatic conditions (temperature and humidity) that induce fungus growth. In tropical climates, careful inspection should be made to detect fungus growth and determine the need of retropicalization during periodic inspection especially if the equipment is operated infrequently.

CAUTION

While servicing the equipment, care must be taken not to destroy the tropicalization seal. Scratches and abrasions that break the surface of the varnish will quickly be acted on by moisture and fungus growth. Once inside the seal, the growth has a tendency to creep along under the surface of the protective film, thus rapidly spreading the damage.

b. PROCEDURE.

(1) Make sure that all parts are sufficiently free from dirt, oil, grease, or other contamination which might interfere with proper adhesion of the varnish.

(2) After cleaning and masking all parts that should remain free from varnish, apply the varnish by means of a spray, brush, or dip. An even film of varnish should be applied, resulting in a dried coating at least 0.002" thick (approximately the thickness of thin cellophane).

CAUTION

Use only varnish approved under Signal Corps Spec. 71-2202A and JAN-C-173 or MIL-V-173A. Do not use any material containing chlorinated phenol.

(3) Any of the following varnishes are acceptable:

Maas & Waldstein Co., Newark, N.J.: — Y-608,
— 522A or
Fungus Resistant Varnish — 522ASH

Wipe-On Corp., New York, N.Y.: — 74FM,
— 74S, or
Bakelite Resin Varnish — Tuf-On — 74SM

Insl-X Co., Inc., Brooklyn, N.Y.: — 27SA or
Air Dry Varnish — 27A

12. LUBRICATION.

The only lubrication point in the AN/TPS-1G system is in the antenna base unit. This is covered in the Lubrication Chart, table 6—4. All blower motors have permanently lubricated sealed bearings.

TABLE 6—4. LUBRICATION CHART

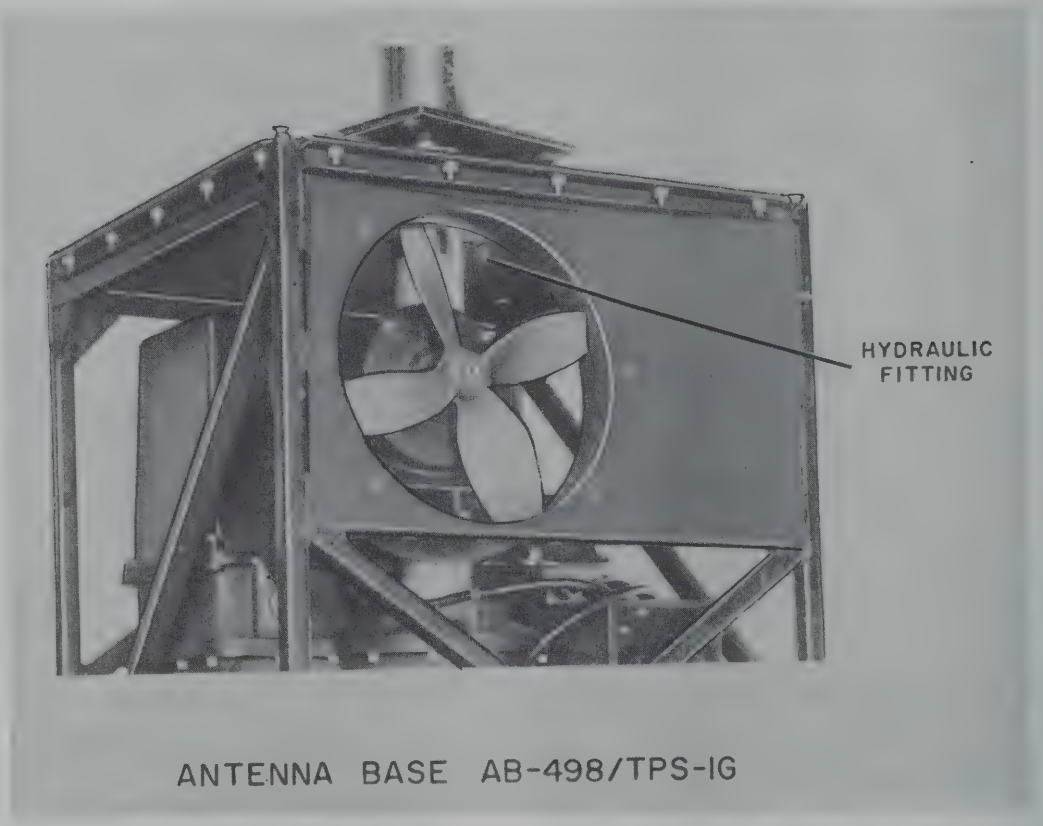

ANTENNA BASE AB-498/TPS-IG

TO LUBRICATE THE SHAFT BALL BEARING, REMOVE THE CAP ON THE HYDRAULIC FITTING. APPLY GREASE TO THE FITTING USING THREE STROKES OF THE GREASE GUN. REPLACE THE CAP. PERFORM SEMI-ANNUALLY.

TOOLS REQUIRED FOR LUBRICATION			
DESCRIPTION	STANDARD NAVY STOCK NUMBER	STANDARD ARMY STOCK NUMBER	STANDARD AIR FORCE STOCK NUMBER
GREASE GUN, GRIP TYPE NOZZLE	G41-G-1329	6G802-1	7900-402000

SPECIFICATION NAME	GRADE	STANDARD NAVY STOCK NUMBER		STANDARD ARMY STOCK NUMBER		STANDARD AIR FORCE STOCK NUMBER	NEAREST COMMERCIAL EQUIVALENT
		5 POUNDS	25 POUNDS	5 POUNDS	25 POUNDS		
14-G-10 BEARING GREASE	A	W14-G-715	W14-G-720	6G673.17	6G673.18	NONE	ESSO STANDARD OIL CO. BEACON LUBRICANT P305

SECTION 7
CORRECTIVE MAINTENANCE

1. GENERAL.

a. USE OF SECTION.

This section provides information for making internal adjustments which were originally made at the factory and therefore are not covered in previous sections of this book. In general, they involve the accurate adjustment of circuits to some particular requirement and will seldom be called for in connection with corrective maintenance. When adjustment is necessary, it is usually because of component aging or because of the replacement of some particular component. Adjustments should be made only according to the procedures given in this section.

The trouble-shooting guides, tables 7—3 through 7—6 provide a basis for effecting repair. Although symptoms of failure are not given for every component, the effects of the failure of each circuit as a whole are covered. Be sure to read paragraph 4., trouble-shooting notes, before attempting to make use of the trouble-shooting guides.

The component location illustrations given in this section will be found particularly helpful in locating components which are not easily spotted because of their particular locations. Also, the illustrations will be helpful in determining the position in which to place a chassis for best accessibility to some particular section or component. The symbol numbers of most components and/or assemblies are marked adjacent to their mounted position. Unmarked components are covered by a plaque which can be found readily on the unit chassis.

The practical wiring diagrams give information as to the routing of unit wiring. Their main purpose is to permit the repair of equipments which are extensively damaged.

b. PRIMARY POWER AND DC CONTROL CIRCUITS.

The power distribution and d-c control circuits diagram (figure 7—109) can be used as the trouble-shooting guide for these functions. All fuses in the equipment, with the exception of F417, have blown-fuse indicators,

FAILURE REPORTS

"Report each failure of the equipment, whether caused by a defective part, wear, improper operation, or an external cause. Use ELECTRONIC FAILURE REPORT form DD787. Each pad of the forms includes full instructions for filling out the forms and forwarding them to the Bureau of Ships. However, the importance of providing complete information cannot be emphasized too much. Be sure that you include the model designation and serial number of the equipment (from the equipment nameplate), the type number of the major unit (from the major unit nameplate), and the type number and reference designation of the particular defective part (from the instruction book). Describe the cause of failure completely, continuing on the back of the form if necessary. Do not substitute brevity for clarity. And remember—there are two sides to the failure report - - -

'YOUR SIDE'

Every FAILURE REPORT is a boost for you:
1. It shows that you are doing your job.
2. It helps make your job easier.
3. It insures available replacements.
4. It gives you a chance to pass your knowledge to every man on the team.

'BUREAU SIDE'

The Bureau of Ships uses the information to:
1. Evaluate present equipment.
2. Improve future equipment.
3. Order replacements for stock.
4. Prepare field changes.
5. Publish maintenance data.

Always keep a supply of failure report forms on board. You can get them from the nearest District Publications and Printing Office."

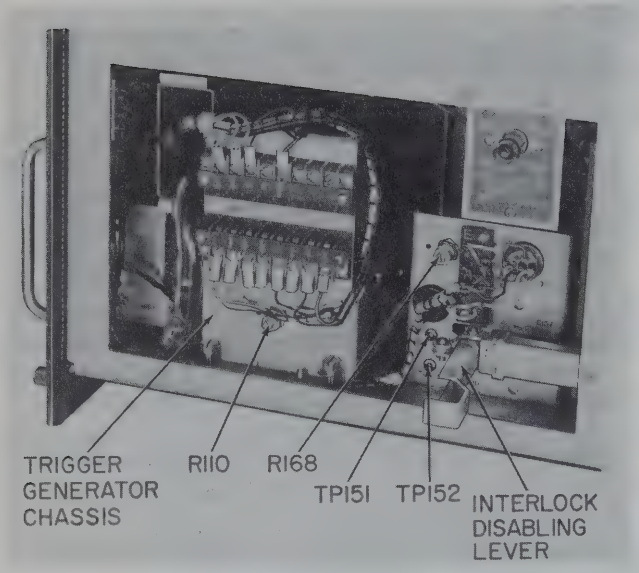

Figure 7—1. Radar Modulator Details (Right Side)

and a visual inspection with the power turned on will therefore reveal an open fuse. When a fuse blows, it may be replaced immediately, but if the replacement fuse blows, do not install another one until the trouble has been located and remedied.

A fuse that blows repeatedly usually indicates a short or an excessive load. As several loads are paralleled in most of the fused circuits, the fastest method of isolation will be by elimination with the aid of figure 7—109.

An open circuit in one of the primary power circuits will be indicated only by failure of the circuit affected. A progressive voltage check is the fastest method of locating trouble of this kind.

Direct-current voltage (27 volts) for operation of the control circuits is obtained from CR401, L403, and R404 in the power supply unit. This power supply is energized by K402 (in the same unit) when system POWER switch S602 (in the indicator unit) is turned on.

The 27-volt supply furnishes energy for the following circuits:

(1) Radiate relay K152
(2) Crystal shutter K501
(3) Local oscillator filament (V505)
(4) Signal comparator relays (K3300 and K3301)
(5) Five-minute delay (K401 and K403)
(6) Radiate hold relay K405
(7) Local oscillator tune motor (B502)
(8) Antenna rotation control relays (K701-K705)
(9) RADIATE-READY indicator (DS611)

c. FILAMENT POWER.

Filament power failure will be evidenced either visually or by the lack of tube warmth when checking a suspected circuit. If the filament power failure is confined to a single tube, the trouble can be located rapidly by checking the wiring for that particular tube. However, if all of the tubes supplied by one transformer do not have filament power, the transformer must be checked.

Eleven transformers are used to supply the filament power to the tubes in the AN/TPS-1G. Table 7—1 lists the transformers and the tubes that each one supplies.

In the event of a filament power failure, a progressive voltage check should be made of the suspected transformer. Cable leads may open or a poor electrical contact at a terminal strip may develop. Never remove a filament transformer until it is definitely known to be defective.

d. RESISTORS.

When replacing a resistor that dissipates an appreciable amount of heat, make sure that it is mounted so that it does not touch another component or the panel board. Resistor leads should be bent as little as possible and never wrapped so tightly around the soldering terminals that a strain is placed on the body of the resistor. Always leave a minimum lead length of 1/8 in. between the resistor and its mounting lug.

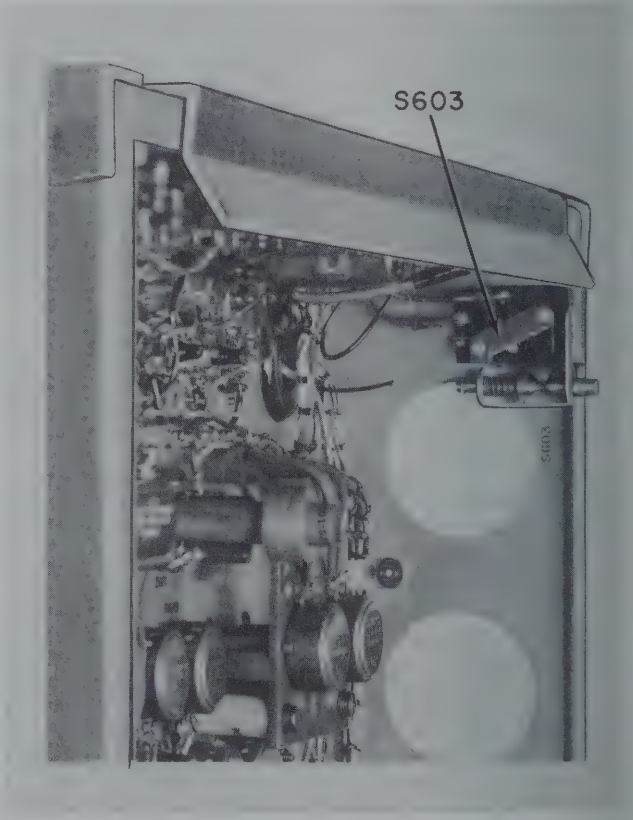

Figure 7—2. Indicator Interlock

e. CRYSTAL DIODES. *(Type 1N127.)*

Several type 1N127 crystals are used in the equipment. Some are used to rectify signals, while others are used for d-c clampers or d-c restorers.

These crystals can be checked by a 20,000-ohms-per-volt meter. To check a crystal, first make certain that a circuit containing resistance does not shunt the crystal. If it is necessary to unsolder a lead to remove shunting resistance, always unsolder a lead other than a crystal lead to avoid damaging the crystal by radiated and conducted heat. The forward resistance should not be greater than 500 ohms (use scale above XI scale) and the backward resistance should be over 100,000 ohms. Also, the backward resistance should be steady and should not creep during a 10- to 15-second period.

When installing a new crystal, make certain that the crystal is connected for the correct polarity, as indicated on the associated schematic diagram. When soldering the crystal leads, always clamp the leads next to the crystal with a pair of long-nosed pliers so that the pliers absorb some of the heat being conducted to the crystal by its leads. Also, keep the soldering iron away from the crystal and use no more heat than is necessary to obtain a good joint.

f. DELAY LINE W2350.

The 2500-microsecond delay line is a hermetically sealed unit and cannot be opened for repairs. No malfunctioning of the line is anticipated under normal usage. If a unit is suspected, however, it can be checked by substituting a unit known to be good. If the original unit proves to be defective, it must be replaced.

g. DISABLING INTERLOCKS.

(1) GENERAL.

The primary function of the interlocks in the AN/TPS-1G system is to protect personnel against injury from voltages above 500. When disabling an interlock as outlined below, observe the following warning.

WARNING

If an interlock is disabled, avoid personal contact with all circuits as carefully as if you were servicing a piece of rotating machinery with the safety guards removed.
If possible, keep out of direct contact with ground; then, if a high-voltage circuit is accidentally contacted, the chances of injury are greatly lessened.
Always make resistance measurements first when checking circuits which operate over 500 volts (includes scope plate supply and keep-alive supply). Under no circumstances should a voltage measurement of the azimuth and range indicator and the radar modulator high-voltage supplies be attempted in the field. However, observations for arcing in these units can be made in the field.
Make a habit of keeping both hands in the pockets or behind the back when making observations of any opened energized unit.

All interlocks, if disabled, are automatically reinstated when the units are closed. The following chassis have high-voltage warning lights which are illuminated when the interlocks are disabled and primary power is present: radar modulator (figures 7—14 and 7—16), azimuth and

TABLE 7—1. FILAMENT POWER DATA

TRANSFORMER	UNIT	TUBES SUPPLIED
T101	Radar Modulator	V101, V102, V103, V105, V106
T152	Radar Modulator	V151, V152, V153, V154, and V155
T153	Radar Modulator	V156
T2350	Signal Comparator	All tubes in unit
T401	Power Supply	All tubes in power supply section
T501	Receiver-Transmitter	V501 (also supplies high voltage)
T503	Receiver-Transmitter	V222, V223, V224, V225 (IF preamp) V506 (Coho preamp)
T504	Receiver-Transmitter	V502 (magnetron)
T604	Azimuth and Range Indicator	V626 (also supplies high voltage)
T605	Azimuth and Range Indicator	All tubes in unit except V626
T702	Antenna Base	V701-V706 (servo amplifier)

range indicator (figure 7–26) power supply (figure 7–4), and radar receiver-transmitter (figures 7–5 and 7–6).

System tubes may be checked at any time for heater or filament supply without shorting out the interlocks. The signal comparator and the trigger generator of the modulator likewise may be checked under operating conditions without shorting out an interlock. The signal comparator has an interlock (S2355) which only shuts down the open-blade blower B2350 (if operating because of high temperature).

One point to remember regarding the interlock system is that opening either the azimuth and range indicator or receiver-transmitter units not only disables the power supply to those units but also disables the power supply unit plate supply. The converse, of course, is also true when the power supply unit is opened.

(2) HIGH-VOLTAGE MEASUREMENTS.

WARNING

THE OPERATION OF THIS EQUIPMENT INVOLVES THE USE OF HIGH VOLTAGES WHICH MAY BE DANGEROUS TO LIFE. PERSONNEL SHOULD EXERCISE EXTREME CARE AND OBSERVE THE USUAL SAFETY PRECAUTIONS IF WORKING ON THE EQUIPMENT WHILE IT IS ENERGIZED. WHEN THE EQUIPMENT IS TURNED OFF, HIGH VOLTAGES MAY REMAIN ON CAPACITORS WHICH SHOULD BE DISCHARGED BEFORE TOUCHING THEM.

Whenever possible, avoid taking measurements of circuits which operate at over 300 volts. Resistance measurements usually provide sufficient information to check out a circuit.

To make voltage measurements of circuits which operate above 300 volts, proceed only as follows:

(*a*) De-energize the equipment. Ground the terminals to be measured to remove the charge from any capacitors connected to these terminals.

(*b*) Connect the meter to the terminals to be measured using a range higher than the voltage expected.

(*c*) WITHOUT TOUCHING THE METER OR TEST LEADS, energize the equipment and read the meter.

(*d*) De-energize the equipment. Ground the terminals connected to the meter before removing the meter.

(*e*) Make sure you are not grounded whenever you are adjusting the equipment or using measuring equipment. In general, USE ONE HAND ONLY when servicing equipment.

(*f*) If test meter must be held or adjusted while power is applied, GROUND the case of the meter before starting measurement. DO NOT TOUCH the live equipment or personnel working on live equipment while you are holding the meter. (Some moving-vane type meters should not be grounded or held during measurement.)

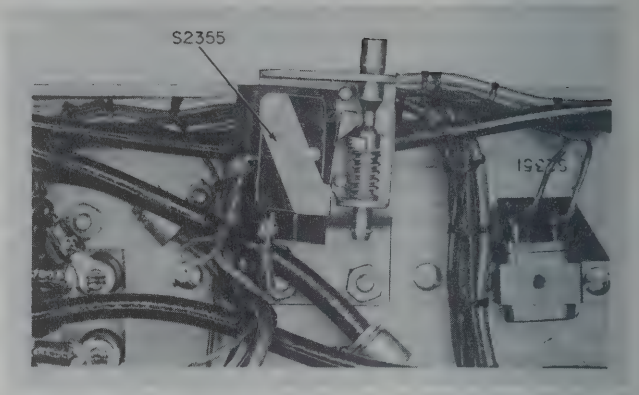

Figure 7–3. Signal Comparator Interlock

(*g*) DO NOT FORGET that high voltages MAY BE PRESENT across terminals that are normally low voltage. Be careful even when measuring low voltages.

(*h*) DO NOT USE test equipment known to be in poor condition.

(*i*) High-capacitance, high-voltage capacitors should be discharged with a grounding stick with approximately 10 ohms in series with the line. When neither terminal of a capacitor is grounded, short the terminals together.

(3) MODULATOR.

To disable interlock S153A/B and shorting switch, hinge the lever on the lower right side of the chassis outward so that the lever is at right angles to the side of the chassis (see figure 7–1).

(4) AZIMUTH AND RANGE INDICATOR.

To disable interlock S603, located on the rear upper left edge of the chassis, pull outward on the interlock pin after centering the pin in its bracket. A tapered recess in the pin holds the pin in the outward position (see figure 7–2).

(5) SIGNAL COMPARATOR.

To disable blower motor interlock S2355, located on the rear center edge of the chassis, pull outward on the interlock pin after centering the pin in its bracket. A tapered recess in the pin holds the pin in the outward position (see figure 7–3).

(6) POWER SUPPLY.

To disable interlock S402, snap interlock shorting switch S404, located on the top left front corner of the chassis (see figure 7–4).

(7) RECEIVER-TRANSMITTER.

To disable interlock S504A/B, located in front of

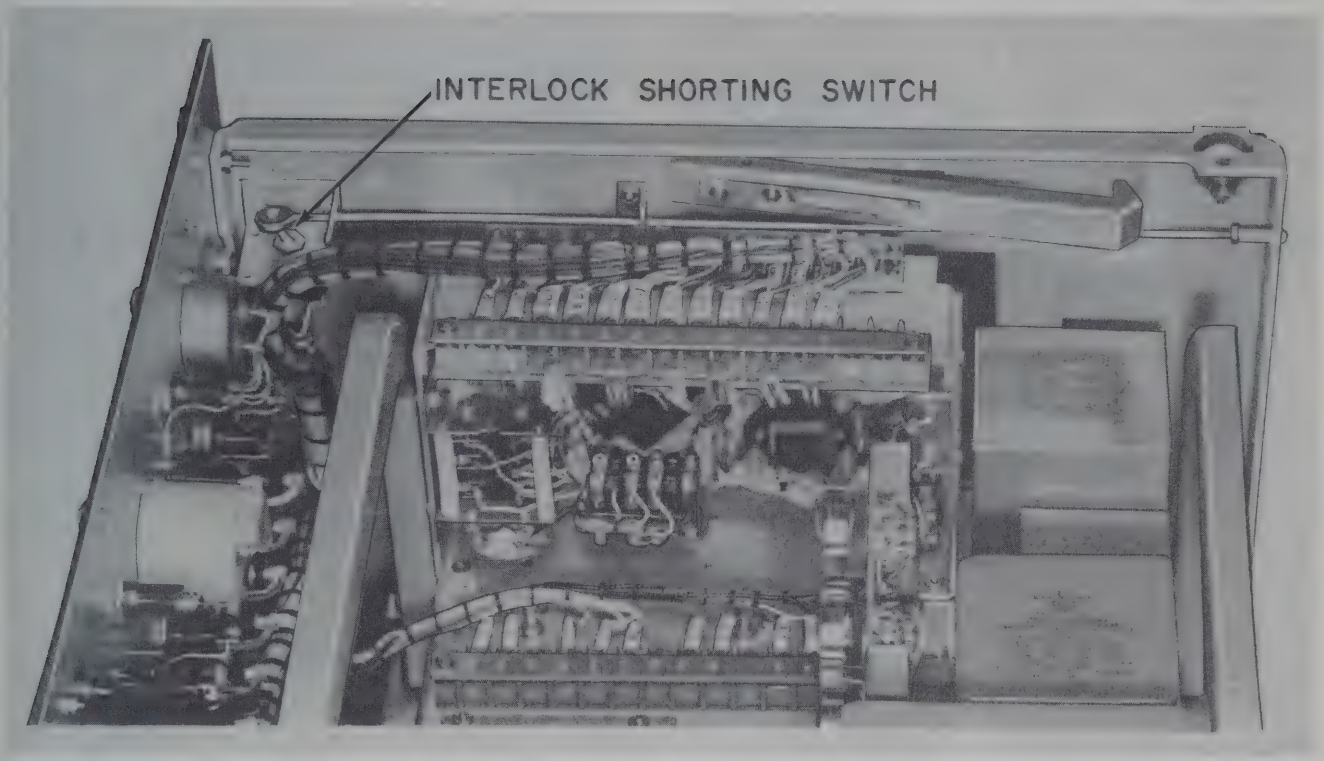

Figure 7—4. Power Supply Shorting Switch

R509 (large ferrule-type resistor) and on the upper right side of the chassis, push in on the interlock extension shaft (upper right rear corner) and press the locking pin (pin on lower side of S504A/B rocker arm). Release pressure on the extension shaft and then release pressure on the locking pin (see figure 7—5).

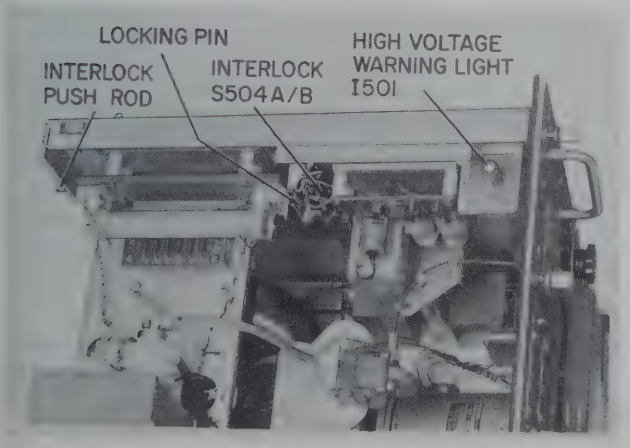

Figure 7—5. Receiver-Transmitter Interlock and Warning Light

(8) SERVO AMPLIFIER (ANTENNA BASE UNIT).

To disable interlock S701, located on the rear edge of the chassis, push in on the roller end of the S701 rocker arm, press the pin in the opposite end of the arm, release the roller end of the rocker arm, and then release pressure on the rocker arm pin (see figure 7—7).

(9) ANTENNA SAFETY SWITCH (ANTENNA BASE UNIT).

To disable the antenna base unit, snap the safety switch S753 to OFF. This switch is located on the small rectangular panel just above and to the right of the servo amplifier panel (see figure 7—8).

CAUTION

Do not operate the safety switch while the antenna is rotating, except in an emergency. Shortened drive-motor life may result.

b. CONVENIENCE OUTLETS.

The three convenience outlets (J409, J603, and J754) are provided for the use of soldering irons, test equipment, trouble lights, etc. When the equipment is not radiating, the outlet circuit is fused for 6.25 amperes (F416). When the equipment is radiating, the outlet circuit is fused for 1.6 amperes (F401).

Switching of fuses is performed by contacts of K405,

and serves to limit the load taken from the primary power source.

i. PHONE CIRCUIT.

When the antenna and/or the azimuth and range indicator are operated remotely, it undoubtedly will be helpful to make use of the phone circuit for maintenance adjustments. Sound-powered phones with 1/4-in.-diameter tip and sleeve plugs are required. The location of the antenna base phone jack, J752, is shown in figure 7—8. The power supply and indicator jacks are shown in figures 4—1 and 4—2.

2. USE OF TEST EQUIPMENT.

a. GENERAL.

Test equipment, listed in the order of importance for locating and correcting failures, is approximately as follows:

Multimeter (20,000 ohms-per-volt)
Vacuum tube voltmeter (with RF probe)
Oscilloscope (general-purpose)
Oscilloscope (special, such as TS-239A/U)
Tube tester
Sweep generator (5—100-mc)
Special test equipment (such as range calibrator, VSWR equipment, power meter, etc.).

Recommended test equipment and usage characteristics are given in table 7—2.

b. MULTIMETER.

The voltohmmeter can be used to locate a large percentage of the faults which occur in radar equipment. Used in conjunction with the schematic diagram and the socket voltage and resistance tables, improper operating voltages, shorts, discontinuities, etc., can usually be located without much difficulty.

The tube socket adapters supplied with the equipment (Case CY-1060/TPS-1D) provide a means for making tube socket measurements conveniently on the top of the chassis.

c. VACUUM TUBE VOLTMETER (WITH RF PROBE).

This instrument is invaluable for checking signal circuits and also high-impedance circuits. Used with the RF probe, it will detect the presence of trigger and RF voltages.

The signal comparator has 60-Mc (coho) and 9-Mc oscillators and also a trigger generating circuit. These circuits are easily checked with the VTVM. Also, the gate, marker, sweep, and video circuits can be checked for the presence of signal voltage.

In most cases definite values of signal voltages are not given for various points of the circuits because of the waveforms involved, this check being better accomplished with the oscilloscope. However, the VTVM provides a means of signal tracing, a lack of signal voltage indicating that other checks are in order.

d. OSCILLOSCOPE (GENERAL-PURPOSE).

A general-purpose oscilloscope is generally defined as an instrument with sweep rates up to 50 kc and with vertical and horizontal amplifiers capable of use up to 100 kc or more. Sweep synchronization is possible either from the signal applied for the vertical deflection or from an external synchronizing signal.

The TS-34A/AP listed in table 7—2 is of the general-purpose type, with the added features of a gated sweep, fast sweep speeds, and the ability to make certain time measurements. This scope can be used on the AN/TPS-1G for signal tracing much the same as the VTVM. It also can be used in conjunction with a sweep frequency generator for measurements of the 9- and 60-Mc amplifier.

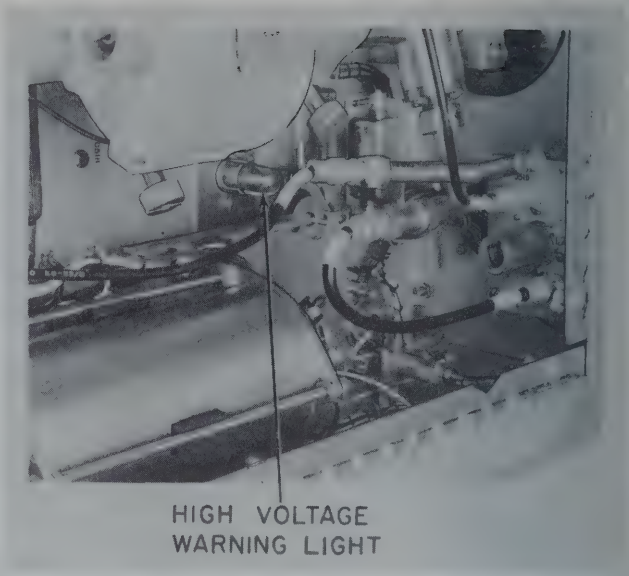

Figure 7—6. Receiver-Transmitter Warning Light (Bottom of Chassis)

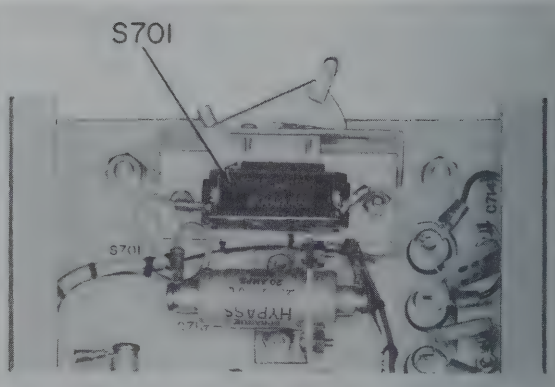

Figure 7—7. Servo Amplifier Interlock

Use of the TS-34A/AP as a signal tracer is somewhat limited by the fact that most signal circuits are operated at a 400-cps repetition rate. On such circuits the sweep is easily synchronized internally, but the resultant sweep length of 2500 microseconds makes close inspection of triggers and short gates difficult. However, this can be overcome to some extent by increasing the horizontal amplifier gain and positioning the pattern by means of the horizontal centering control.

The TS-34A/AP Oscilloscope accomplishes the results of the general-purpose oscilloscope plus the close checking of trigger and other short-duration signal waveforms. Also, the high-frequency characteristic of the TS-34A/AP is sufficiently good that the waveforms will appear substantially as given on the servicing block diagram (figure 7—107).

e. OSCILLOSCOPE (SPECIAL TYPES).

The special types of oscilloscopes which are particularly useful with the AN/TPS-1G are those having gated sweeps with a good selection of sweep speeds. Also, the inclusion of calibrated markers provides a means of checking pulse waveforms, gate lengths, and range markers. Procedures in this section give detailed applications of this type of oscilloscope.

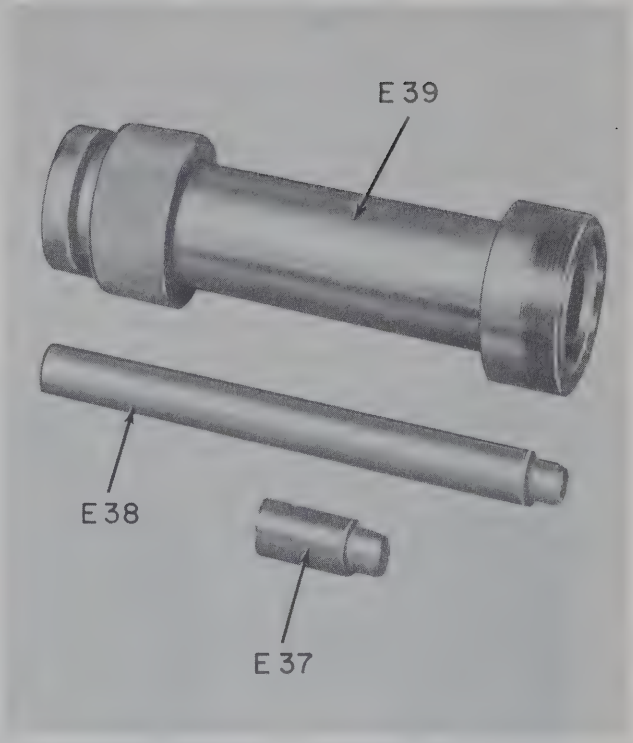

Figure 7—9. Coaxial Adapter

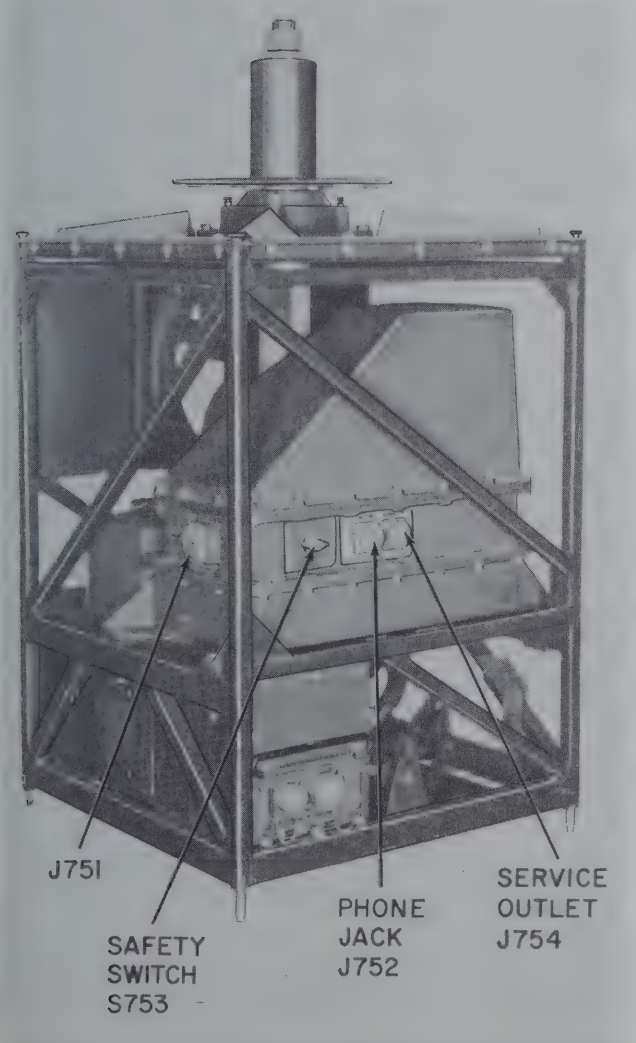

Figure 7—8. Antenna Base Safety Switch

The waveforms on the servicing block diagram (figure 7—107) were obtained with the TS-239A/UP Oscilloscope. Therefore, in comparing waveforms, it is important that the recommended type of oscilloscope be used. If a substitution is made, allowances in the appearance of the waveforms should be made for the characteristic of the oscilloscope used.

f. TUBE TESTER.

To ensure against damage to the equipment from shorted or otherwise defective tubes, all tubes should be tested in a reliable tube tester when received. However, a tube should not be accepted as completely satisfactory until it has been tested in the equipment.

In the event of trouble, do not rely entirely on the tube tester when checking suspected tubes; check them also by substitution.

g. SWEEP GENERATOR.

Frequent use is made of Signal Generator TS-452/U for checking 9- and 60-Mc amplifiers. This generator consists of a sweep signal generator, a marker signal generator, a calibrated attenuator, and an oscilloscope — all built into a single unit. The equivalent of this gen-

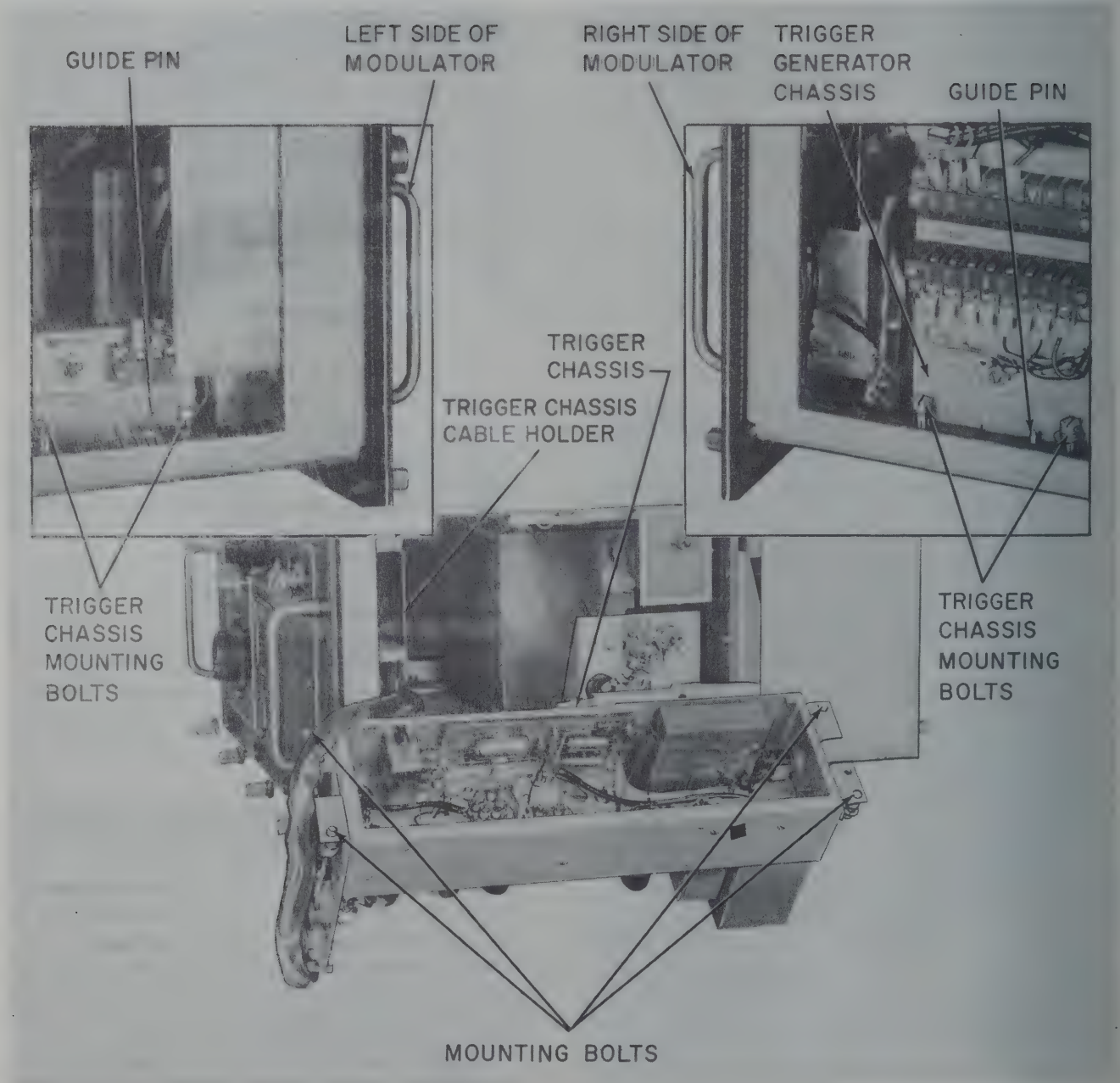

Figure 7—10. Trigger Chassis (Removed from Modulator for Checking)

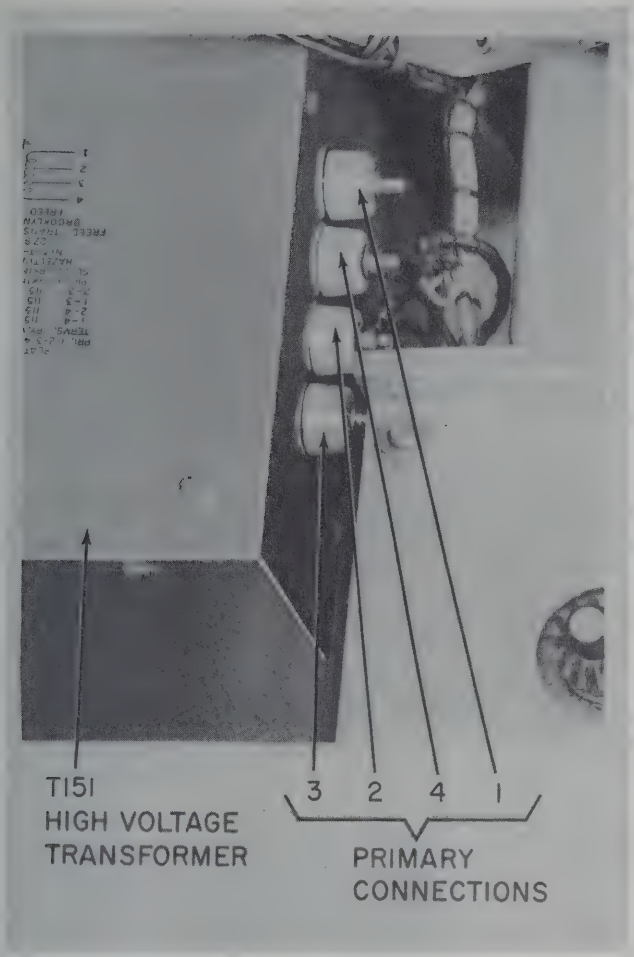

Figure 7—11. Modulator High-Voltage Transformer Primary Taps

erator can be made up from individual units which may be available.

The sweep generator should cover the frequencies from approximately 5 to 70 Mc, and should be capable of sweeping approximately 10 Mc at any point in this frequency range. The marker generator is commonly built into sweep generators. However, Signal Generator TS-497/URR or AN/URM-26 can be used for this purpose and also for checking the calibration of the sweep generators having a marker generator.

The calibrated attenuator should have a 50-ohm input and output impedance and should be capable of being varied in 1-db steps up to at least 100 db. The TS-34A/AP, TS-239/AP, or general-purpose oscilloscope can be used for observation.

Since the 9- and 60-Mc amplifiers are wide-band amplifiers, the use of a sweep generator is recommended for checking bandpass and gain characteristics. The use of single frequency generators is not recommended for checking these amplifiers, as it is difficult to obtain the required bandpass characteristics; also, the gain figures obtained with any known method are quite likely to be inaccurate.

b. TEST ATTENUATOR Z2350.

A test attenuator is supplied to provide a comparative means of checking the pulse delay network for excessive attenuation. It is mounted in fuse clips on top and at the rear of the signal comparator chassis. The attenuation at 9 Mc is approximately equal to the normal attenuation through the pulse delay network. The use of the test attenuator is fully described in paragraph 7.*c.*, this section.

i. USE OF 1-5/8-IN. COAXIAL ADAPTER. *(See figure 7—9.)*

The adapter consists of one outer coaxial conductor, and one short and one long inner coaxial conductor (bullets). The adapter is intended for use with Standing Wave Meter TS-130/U and Dummy Antenna TS-235/UP. The outer conductor and the long inner conductor adapt the TS-130/U line section to the AN/TPS-1D coaxial cable, RF854, which normally is attached to RF OUTPUT jack J502 of the receiver-transmitter unit. The short inner conductor and the outer conductor adapt the TS-235/UP to RF854 or RF754 at the antenna.

3. COMPONENT REPLACEMENT.

a. GENERAL.

Both mechanical and electrical components have been arranged for easy access, and replacement in most cases will present no unusual problems. Special procedures are described under the appropriate unit name.

All cables that connect to terminal strips with screw-type connections are laced so that each lead breaks out at the proper point and is tagged with the number of the terminal to which it connects. Although all other cables are laced so that each lead breaks out at the proper place and is of the proper length, it is advisable to tag each lead before unsoldering in order to simplify replacement.

b. TUBES.

The tubes in each unit are readily accessible after the unit has been withdrawn from its case. Miniature tubes are held in their sockets by their shields. All larger tubes are held in place by spring-loaded clamps which must be unlocked with the aid of a small screwdriver before the tube can be removed. The locks on these tubes should never be allowed to snap back against the tube base, as the blow can cause breakage of the glass seal in the tube base.

For ease in identifying tube elements, all tube sockets have the main elements color-coded with drops of paint on the bottom of the sockets near the pins, as follows:

Plate	— blue
Control grid	— green
Cathode	— brown

When replacing tubes, *all tubes of a given type supplied with the equipment shall be consumed prior to employment of tubes from general stock.*

TABLE 7–2. RECOMMENDED TEST EQUIPMENT AND USAGES

TEST SET	COGNIZANT AGENCY	USAGE
Electronic Multimeter ME-6A/U or higher or ME-74( )/U	BuShips	General voltage and resistance measurements of high-resistance circuits
Multimeter AN/PSM-4 Series or AN/PSM-6	BuShips USAF	General voltage and resistance measurements where 20,000-ohm-per-volt meter is indicated
Electronic Multimeter (VTVM) ME-25/U Series or	BuShips	AC measurements of high-resistance circuits
TS-505/U Series or	Sig. Corps	AC measurements of high-resistance circuits
AN/USM-34	BuShips	AC measurements of high-resistance circuits
Oscilloscope TS-34A/AP Series or OS-8( )/U	BuShips	General check of system signal circuits
Oscilloscope (Syncroscope) TS-239/AP Series or AN/USM-24 Series	BuShips	1. General usage 2. Measurement of waveform timing (e.g., gate lengths) 3. Range marker calibration 4. Repetition rate check
Tube Tester TV-3/U Series or TV-7/U	BuShips	Check receiving-type tubes
Signal Generator TS-452/U Series or AN/TRM-3 Series	USAF BuAer	Check IF amplifiers
Signal Generator TS-419/U or AN/URM-64( )	BuShips BuAer	VSWR measurements
Signal Generator TS-497/URR or AN/URM-26	Sig. Corps BuShips	Marker signal for sweep generator calibration
RF Wattmeter AN/URM-23 or TS-107A/TPM-1	USAF BuShips	1. Measure transmitter output power 2. General AC power measurements
Dummy Antenna TS-235/U	All agencies	Transmitter load for testing

TABLE 7—2. RECOMMENDED TEST EQUIPMENT AND USAGES (Cont.)

TEST SET	COGNIZANT AGENCY	USAGE
Standing Wave Indicator TS-12/AP Series or IM-87( )/UP	BuShips	VSWR measurements
Fluxmeter TS-15/U Series	Sig. Corps	Check magnetron magnet
Crystal Rectifier Test Set TS-268/U Series	Sig. Corps	Check silicon and germanium crystal rectifiers
Standing Wave Meter TS-130/U Series	BuOrd	Check standing-wave ratio
Tuned Cavity TS-172B/UP (Echo Box) (Supplied with equipment)	All agencies	1. Check and/or set transmitter frequency 2. Adjust receiver
Test Attenuator (Z2350) (Supplied with equipment)	All agencies	Check delay network
Radar Range Calibrator TS-573/UP	BuShips	Calibrate range circuits of radar equipment
Tube Socket Adapter Kit MX-1258/U (Supplied with equipment)	BuShips	Permits taking of voltage and resistance measurements from top of chassis
Pulse Generator (Video) AN/UPM-15 or AN/USM-27	USAF BuShips	Test pulse amplifiers and circuits
RF Indicator (neon bulb) TS-446/U	USAF	Detect presence of stray RF fields
Meter Kit TS-132( )/TPS-1	USAF	Power Frequency Meter
Tunable Crystal and Bolometer Mount PRD type 612A or equivalent		VSWR measurements
Radar Signal Simulator AN/UPM-81	BuShips	Provide simulated (fixed or MTI) targets
Dummy Load TS-234/UP or DA-104/U	USAF USAF	Modulator load for testing

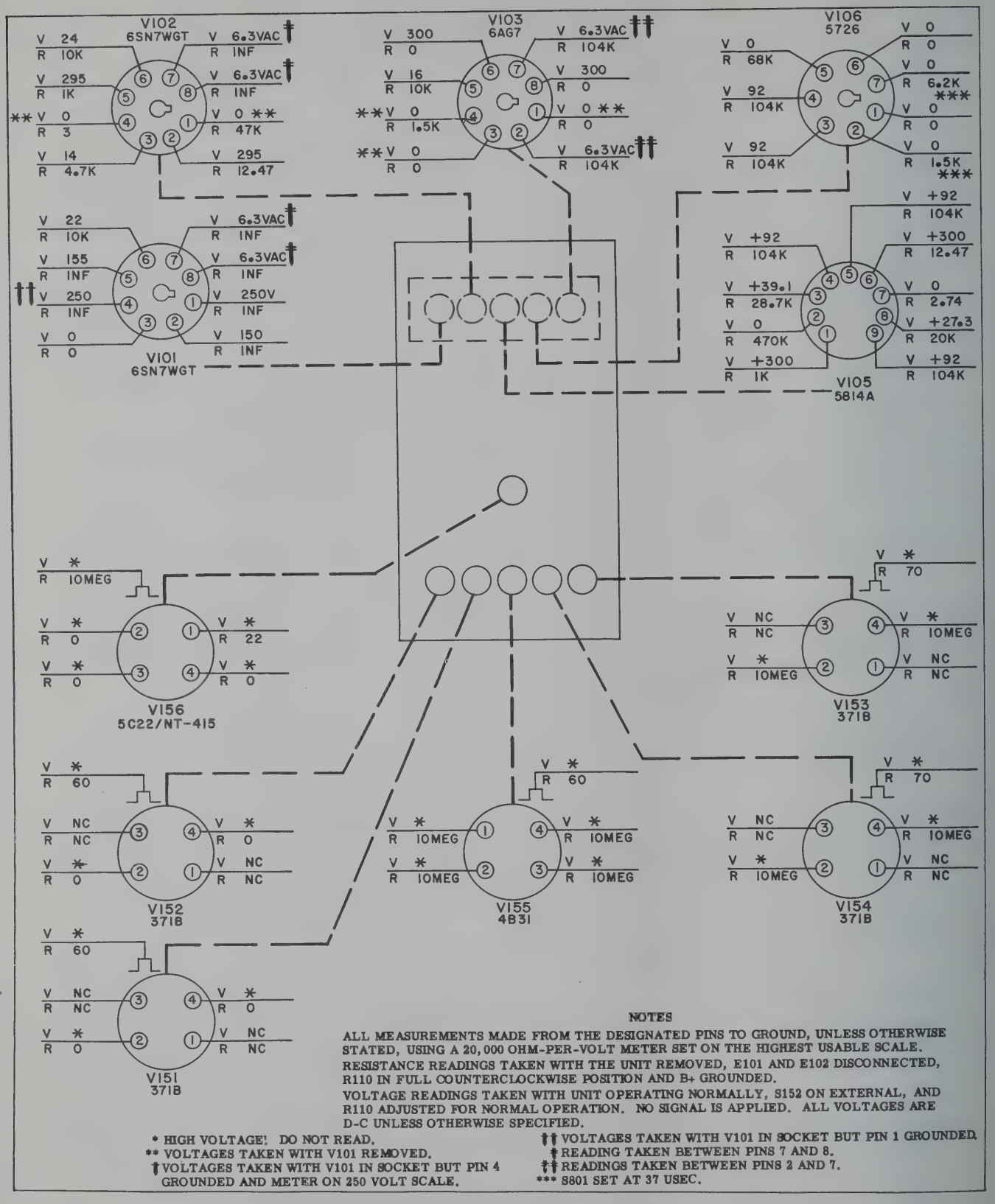

NOTES

ALL MEASUREMENTS MADE FROM THE DESIGNATED PINS TO GROUND, UNLESS OTHERWISE STATED, USING A 20,000 OHM-PER-VOLT METER SET ON THE HIGHEST USABLE SCALE.

RESISTANCE READINGS TAKEN WITH THE UNIT REMOVED, E101 AND E102 DISCONNECTED, R110 IN FULL COUNTERCLOCKWISE POSITION AND B+ GROUNDED.

VOLTAGE READINGS TAKEN WITH UNIT OPERATING NORMALLY, S152 ON EXTERNAL, AND R110 ADJUSTED FOR NORMAL OPERATION. NO SIGNAL IS APPLIED. ALL VOLTAGES ARE D-C UNLESS OTHERWISE SPECIFIED.

* HIGH VOLTAGE! DO NOT READ.
** VOLTAGES TAKEN WITH V101 REMOVED.
† VOLTAGES TAKEN WITH V101 IN SOCKET BUT PIN 4 GROUNDED AND METER ON 250 VOLT SCALE.
†† VOLTAGES TAKEN WITH V101 IN SOCKET BUT PIN 1 GROUNDED.
‡ READING TAKEN BETWEEN PINS 7 AND 8.
‡‡ READINGS TAKEN BETWEEN PINS 2 AND 7.
*** S801 SET AT 37 USEC.

Figure 7—12. Modulator Voltage and Resistance Measurements

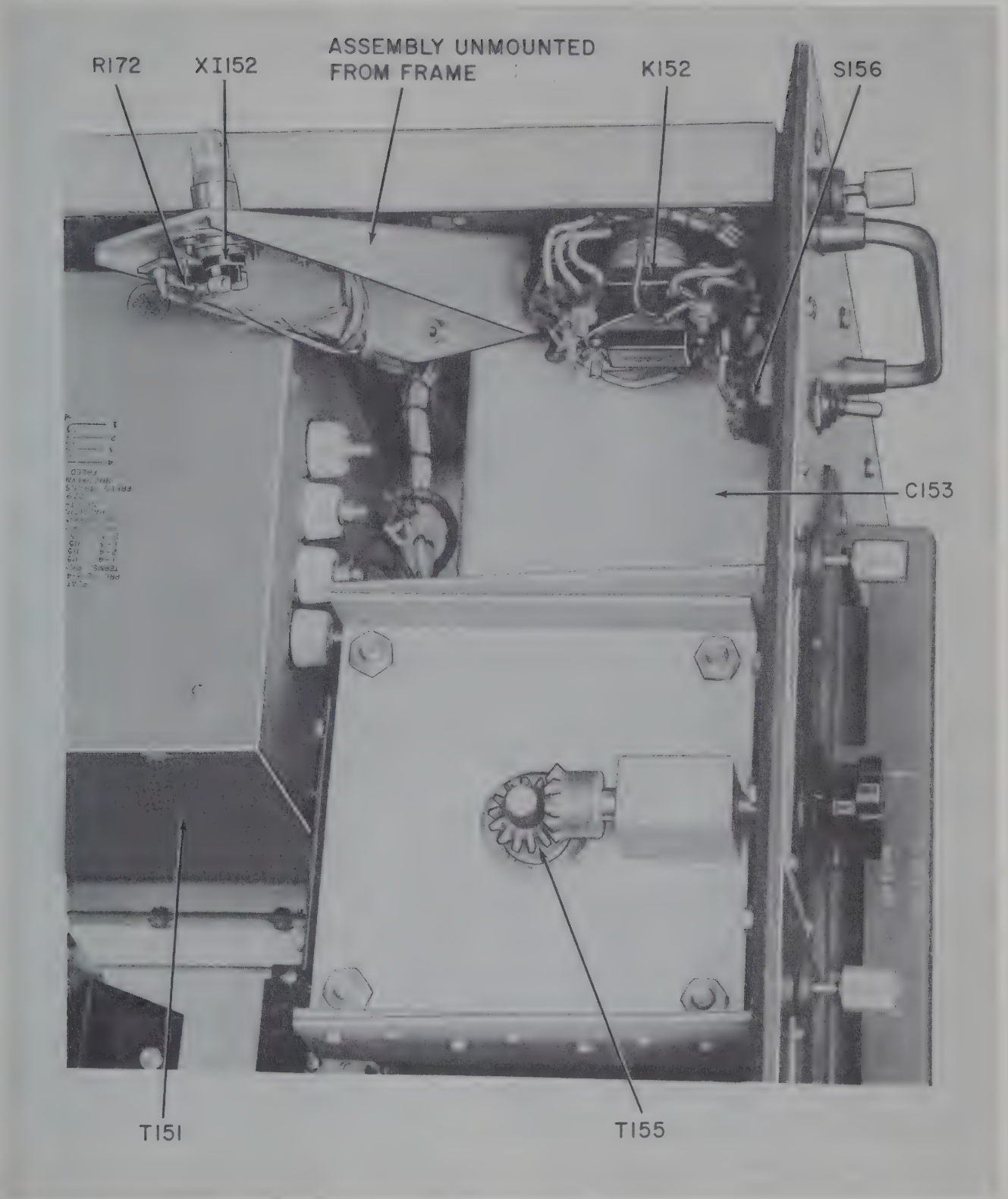

Figure 7—13. Modulator Component Locations (Top Right)

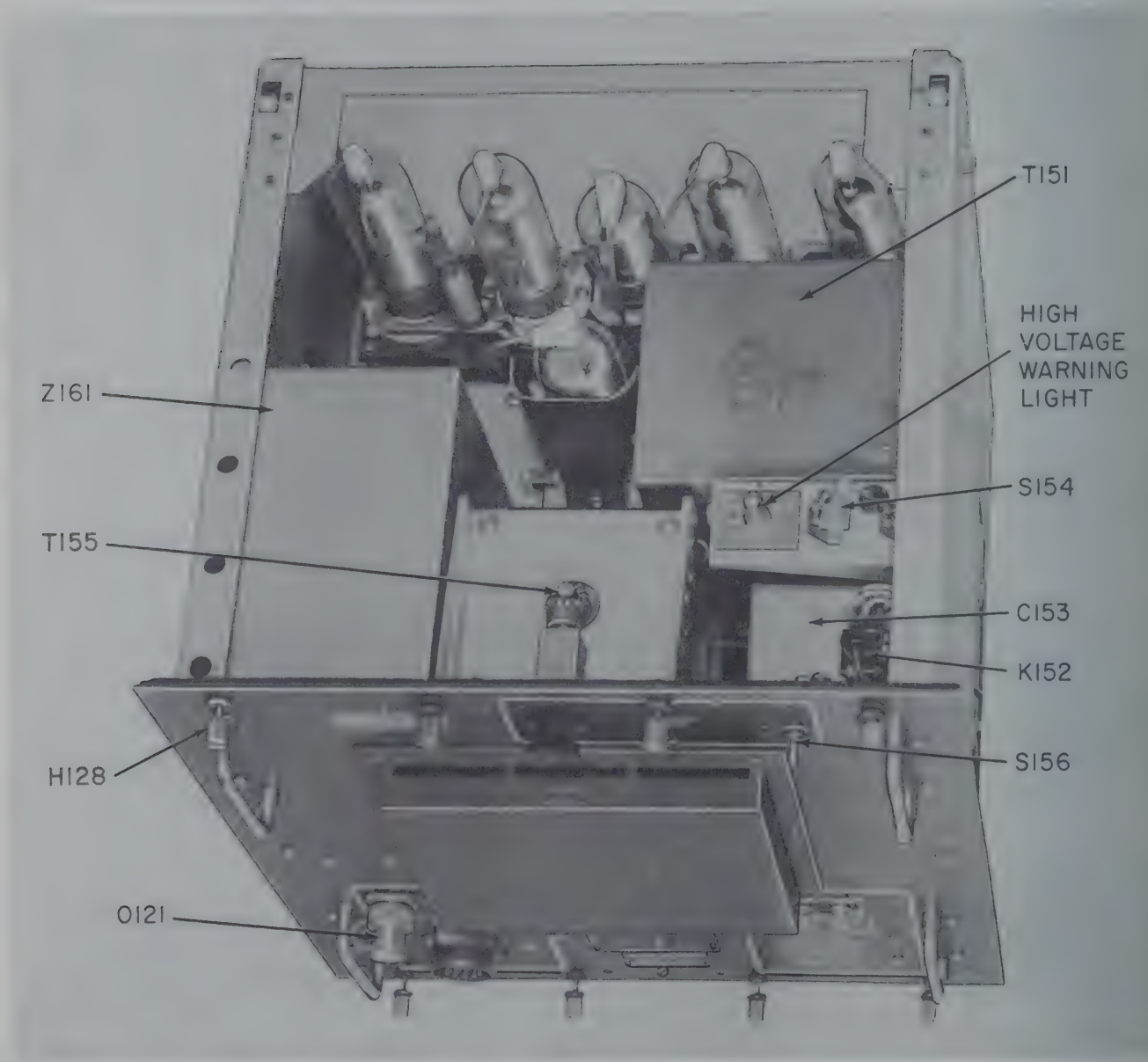

Figure 7—14. Modulator Component Locations (Top Side)

c. CAPACITORS.

Use care in handling metal-cased capacitors, as a dent in the case can cause a breakdown. When installing capacitors having pigtail leads, make sure that no strain is placed on the body of the capacitor, and bend the leads as little as possible. When soldering to a lug that is part of a can-type capacitor, use the minimum heat for the shortest time that will ensure a reliable connection.

4. TROUBLE-SHOOTING NOTES.

Should trouble arise in the operation of the AN/TPS-1G equipment, an orderly approach to the difficulty will produce results more quickly and easily than will a haphazard procedure.

The trouble-shooting guides, tables 7—3 through 7—6, are arranged to employ a process of elimination. In radar equipments, which usually contain many related circuits, this procedure has proven most effective. In some cases it may appear that the recommended procedure of always starting at the top of the tables and working downwards requires considerable unnecessary checking. However, all too often, if some item of the table is singled out without having made the checks preceding that item, some simple basic fault is overlooked. Also, should more than one fault be present at one time, there is a much better chance of separating a failure into the individual faults if the recommended procedure is followed.

Once a trouble is narrowed down to a unit and thence to a particular circuit of that unit, the item most likely to be at fault is a tube.

After checking tubes, circuit voltage and resistance measurements are in order. If at this point the trouble has not been found, a fault such as an open coupling capacitor is quite likely to be the cause of trouble. Such items are often located by shunting the suspected capacitor with a new capacitor of the same voltage rating and of approximately the same capacitance value.

This type of trouble also can be traced by checking the circuit for signals with a test oscilloscope, using the servicing block diagram (figure 7—107) as a guide.

5. RADAR MODULATOR MD-144A/TPS-1D.

WARNING

THE OPERATION OF THIS EQUIPMENT INVOLVES THE USE OF HIGH VOLTAGES WHICH MAY BE DANGEROUS TO LIFE. PERSONNEL SHOULD EXERCISE EXTREME CARE AND OBSERVE THE USUAL SAFETY PRECAUTIONS IF WORKING ON THE EQUIPMENT WHILE IT IS ENERGIZED. WHEN THE EQUIPMENT IS TURNED OFF, HIGH VOLTAGES MAY REMAIN ON CAPACITORS WHICH SHOULD BE DISCHARGED BEFORE TOUCHING THEM.

a. TROUBLE-SHOOTING.

Most troubles which could develop in this unit are reflected in the reading of the MAGNETRON CURRENT meter (M502) on the receiver-transmitter panel.

This does not mean that an improper or irregular meter indication is necessarily caused by trouble in the radar modulator, because a faulty magnetron tube, arcing in the RF system, etc., can produce the same symptoms. However, if such trouble is present only while using internal triggers, it is almost certain that the circuit of V101 in the trigger generator is at fault.

When checking for faults, remember that the thyratron, V156 is triggered by V103. Erratic magnetron keying, resulting in improper magnetron operation, can be caused by erratic thyratron firing. If the thyratron shows an unsteady glow, the thyratron itself can be at fault, or the trouble may be in the trigger generating source, in the high-voltage power supply, or in the output circuit of the thyratron.

Scope checks can be made of the trigger output circuit on J153 (panel test point). The pulse-line charging waveform can be checked across TP151 and TP152 (ground), located on the right side of the chassis (see figure 7—1). Trigger waveforms are checked at TP102, TP103, and TP104 on the trigger chassis. The output pulse can be checked on the panel jack J156.

Waveforms are given on engravings adjacent to these test points. Also see the servicing block diagram (figure 7—107).

There are four tap combinations on the primary of the high-voltage power supply transformer, T151 (see figure 7—11). The same tap is used on all modulators as shipped, and it is expected that the tap will not have to be changed unless line voltage conditions demand it (see paragraph *d.* below).

Excessive accumulation of dirt and moisture are the most likely causes of arcing anywhere in the high-voltage circuit. Cleaning and drying of the affected areas will be necessary to eliminate arcing from this cause.

A defective pulse line may appear to operate normally, but the waveform appearing at test point TP151 will be distorted and magnetron current will not be normal.

There are no mechanical adjustments to be made in the modulator. Removal of all assemblies and subassemblies is straight-forward. It consists mainly of disconnecting all leads at the nearest screw terminal point and removing the unit mounting bolts.

Figure 7—10 shows the method of removing and checking the trigger chassis. Voltage and resistance measurements are given in figure 7—12. Component locations are shown in figures 7—13 through 7—20.

b. REPETITION RATE ADJUSTMENT R110.
(See figure 7—1.)

Repetition rate adjustment R110 is connected in series with the REP. RATE CONTROL (R167) on the unit panel, and sets the repetition rate limit to which R167 can be adjusted. To adjust R110, proceed as follows:

(1) Connect the vertical deflection circuits of a test oscilloscope to J153. (Operate the test scope from any one of the panel power receptacles, J409, J603, or J754.)

TABLE 7—3. SYSTEM TROUBLE-SHOOTING GUIDE

Although the trouble may appear to be in a particular unit, always start at the upper left side of the guide and work downward. It is assumed that 115-volt 400-cycle power is being applied to the system power cable, that the system POWER switch S602 (indicator) is on, that no blown fuses are indicated, and that no interlocks are open. Should a blown fuse be indicated at any time, replace the fuse but investigate cause if fuse blows second time. Disable interlocks when necessary, but only as given in paragraph 1.g. in this section. Unless otherwise stated, paragraph references are to Section 7.

Power Supply Line Voltage and Line Frequency Meters

- If not reading, or low, check →
  1. Power cables and fittings, Variable Power Transformer TF-238/U.
  2. Check meter(s) if only apparent system defect.
- If not within limits or unsteady, check →
  1. Power source.
  2. Variable Power Transformer TF-238/U.

Reading normal

Power Supply and Receiver-Transmitter Blowers. (Check externally by ear)

- If both not operating, check →
  1. K402 in power supply.
     a. If closed, check K402 contacts and blower motors B401 and B501.
     b. If open, check CR402 and S602.
- If only one operating, check →
  1. Inoperative blower, B401 or B501.

Operating

Signal and Mixer Crystal Current (R-T Test Meter)

- If both zero or low, check →
  1. Local oscillator V505 voltages on both MTI and normal operation (see figure 7—73).
     a. If plate voltage not normal, check power supply.
     b. If V505 heater voltage missing replace TY501 (ballast tube in R-T); if defect persists, check 27-v DC power supply (CR401 and associated components).
     c. If all voltages check normal, check V505 coaxial fittings and/or V505 (see Section 6, paragraph 7.*b.*). If defect persists replace both crystals (CR502 and CR503), both TR tubes (V503 and V504), and keep-alive voltage (see Section 6, paragraph 7.*d.* and *f.*).
- If only one zero or low, check →
  1. Replace CR502 or CR503 (see Section 6, paragraph 7.*e.* and *f.*).

Reading normal

Magnetron Current (R-T Unit)

- If none or low, see table 7—4

Reading normal

Signal Comparator Test Meter Readings

- If all zero, check →
  1. Supply input voltages.
- If one or more zero or low, check →
  1. Panel adjustments.
     a. If defect cannot be corrected by adjustment, see table 7—5.

All normal

A- and PPI-Scope Displays

- If not normal for signals and/or markers, see table 7—6

TABLE 7—4. TRANSMITTER TROUBLE-SHOOTING GUIDE

This table is intended for use in conjunction with table 7—3. Make certain that RADIATE ON button S616 was pushed after making due allowance for 5-minute warm-up period. Disable interlocks when necessary, but only as given in paragraph 1.*g.* in this section. Unless otherwise stated, paragraph references are to Section 7.

HIGH-VOLTAGE WARNING

Dangerous high voltages are used in the modulator and R-T units. When making visual checks with equipment operating and safety switches disabled, keep at least 12 inches away from any part of the chassis, with both hands behind back or in pockets. Remove the unit power cable to the equipment before replacing tubes or otherwise making contact with components or connections (see paragraph 1.*g.*).

Magnetron Current

If none or low with external triggers only, check →

1. Trigger cable W3, from J302 (signal comparator) to J152 (modulator), and cable fittings.
2. Signal comparator internal subassembly plugs for connections to proper positions as marked on cables and fittings.
3. Input voltages to MTI repetition rate trigger amplifier in signal comparator. If not normal, check power supply output voltage.
4. Carrier gate length R1365 improperly set (see paragraph 7.*b.*(2) and (3)).
5. V1352 through V1357, V1350, V1351, and V1301 through V1306 by substitution one at a time and in order given (signal comparator).
6. Voltage and/or resistance measurements of tube sockets of tubes given directly above (see figures 7—43 and 7—46).
7. If no triggers are developed at J302 after thoroughly checking MTI r.r. trigger amplifier, check delay line W2350. See paragraph 7.*c.*(1).
8. Continuity of modulator TRIGGER switch S152 in EXTERNAL position.

If none, low, or unsteady with either external or internal triggers, check →

1. Thyratron V156 for glow.
   a. If not glowing, check:
      (1) Heaters of V151 through V156 for illumination.
      (2) K152 visually for closed condition*.
      (3) Trigger chassis supply voltages (If OK, check V102, V105, V106 by substitution.)
      (4) V151 through V155 by substitution one at a time.
   b. If V156 not glowing or glow unsteady, check:
      (1) V103 by substitution.
      (2) V156 by substitution.
2. Magnetron V502 by substitution (see Section 6, paragraph 7.*c.*).
3. Pulse cable W2 from modulator to R-T.
4. Continuity and resistance of components of Modulator circuits.
   WARNING: Do not make voltage checks of modulator circuits. See High-Voltage Warning above.

If none, low, or unsteady with internal triggers only, check →

1. V101 and its circuit.
2. Trigger Switch S152.

If reading normal, see table 7—3.

*If, when RADIATE ON button S616 is pressed, K152 does not close or does not remain closed, the following conditions may be present:

If K152 does not close:
1. RADIATE OFF button S615 not making contact.
2. Temperature above safe operating limit of 125° F.
3. Over-temperature relay S501 defective.

If K152 closes but does not remain closed:
1. Contacts of K405 dirty.
2. Magnetron failure (burn-out, gassy, shorts, does not oscillate, improperly aged, not sealed properly, loose output connector).
3. Excessive sparking in RF system (loose or improperly joined RF fitting between output of transmitter and antenna).
4. Thyratron V156 conducting continuously.
5. Relay K151A/B defective or its balancing adjustment R168 disturbed.
6. Poor generator supply regulation.
7. Defective triggers (see above).

TABLE 7—5. SIGNAL COMPARATOR TROUBLE-SHOOTING GUIDE

This table is intended for use in conjunction with table 7—3. It is assumed that an attempt has been made to adjust the unit according to the TEST INSTRUCTIONS on the unit panel nameplate and to the alignment procedure in Section 4. If it becomes necessary to remove the chassis from its case, be sure to disconnect the three delay network (W2350) cables from the chassis. (Cables are located beneath chassis.) Unless otherwise stated, paragraph references are to Section 7.

TEST METER M2350 and TEST SELECTOR switch S2353	
If not reading on any position of S2353, check	1. Supply voltages to the unit. 2. M2350 by connecting 20,000-ohms-per-volt meter across M2350 with meter set on 100-microamp scale. CAUTION: Do not use ohms scale, as damage to M2350 will result.
If not reading or low on position 1 but OK on position 2, check	1. V307 by substitution, also check V307 socket measurements. 2. CR301 and CR302 (see paragraph 1.*e.*).
If not reading or low on both positions 1 and 2, check	1. Voltages to 60-mc IF amplifier assembly. If none, check contacts of K3301. 2. V301 through V308 by substitution one at a time. 3. V222 through V225 in IF preamplifier assembly by substitution one at a time. 4. Tube socket measurement of V301 through V308, V222 through V225 (see figures 7—44 and 7—73).
If not reading or low on position 2 but OK on position 1, check	1. Voltages to coho oscillator assembly. If no input voltage at terminal KC, check R2351 and contacts of K3301. 2. V353 and V354 by substitution. 3. V353 and V354 tube socket measurements (see figure 7—45). 4. CR301 and CR302 (see paragraph 1.*e.*).
If OK on position 2 but coho does not lock, check	1. V350 through V352 and their circuits.
If not reading or low on position 3, check	1. Magnetron current with MTI operation. NOTE: When no or low reading, MTI triggers are usually not being developed (see table 7—4). 2. Voltages to MTI repetition rate trigger amplifier. 3. V1355 through V1357 and their voltage and resistance measurements (see figure 7—43). 4. CR1350. 5. Check W2350 (see paragraph 7.*c.*).
If not reading or low on position 4, check	1. Voltages to non-delay amplifier assembly. 2. R2363. 3. V2301 through V2306 by substitution one at a time. 4. V2301 through V2306 socket measurements (see figure 7—47).
If not reading or low on position 5, check	1. Voltages to delay amplifier. 2. V1301 through V1306 by substitution one at a time. 3. V2301 through V2306 socket measurements (see figure 7—47). 4. V3300 through V3302 by substitution. 5. V3300 through V3302 socket measurements (see figure 7—43).
If readings of M2350 OK on all positions of S2353, but MTI and/or normal radar signals not satisfactory, see table 7—6.	

TABLE 7—6. A AND PPI SCOPE TROUBLE-SHOOTING GUIDE

This table is intended for use in conjunction with table 7—3. Even though a particular irregularity was first noted on the scopes, it is assumed that the checks of table 7—3 were made first. Check tubes, one at a time, by substitution with a checked spare tube.

HIGH-VOLTAGE WARNING

The scope high-voltage power supply is capable of sustaining lethal currents. Make resistance and short checks first. If it becomes necessary to make voltage measurements, check voltage at TP611 and TP612. (See Section 7, paragraph 6.c.)

Both Sweeps

If sweeps both OK, check

- If both scope tubes dark (INTENSITY controls turned up), check →
  1. Supply voltages to unit.
  2. V626.
  3. Circuits of scope high-voltage power supply. Heed the High-Voltage Warning above.
- If only one scope tube dark with INTENSITY controls turned up, replace →
  1. Dark tube V609 or V625.
  2. Components and voltages of INTENSITY control circuit of dark tube.
- If spots on both tubes with INTENSITY controls turned up, check →
  1. Trigger circuit to receiver-transmitter.
- If none, short, or irregular on A scope only, check →
  1. V604, V622, V623, and V624.
  2. V604, V622, V623, and V624 socket measurements (see figures 7—34 and 7—35).
  3. R1676 scope adjustment.
- If PPI sweep not rotating with antenna, check →
  1. Rotation of antenna.
     a. If not rotating, check:
        (1) Antenna drive motor B751 field and armature voltages.
        (2) Servo amplifier voltages.
        (3) Antenna drive motor B751 (brushes, frozen bearings, etc.).
        (4) Contacts and coils of K701, K702, K703, and K705 in servo amplifier.
        (5) V701 through V706.
        (6) V701 through V706 socket measurements (see figure 7—84).
        (7) S617, S618, R609, and R2619.
     b. If rotating, check:
        (1) Contacts and coils of K704.
        (2) S612 and S5756.
        (3) B602 and B752 (synchros) voltages, winding continuity, and frozen bearings.
        (4) PPI deflection coil L601 for sticking.

Markers

If OK, check

- If none on both scopes, check →
  1. V614 through V618.
  2. V614 through V618 socket measurements (see figures 7—34 and 7—35).
- If none on A scope, check →
  1. V619 and V619 socket measurements (see figure 7—34).
- If no strobe marker on PPI, check →
  1. V613 and V621.
  2. V613 and V621 socket measurements (see figures 7—34 and 7—35).
- If none (MTI or normal) on both scopes, check →
  1. V611 and V612.
  2. V611 and V612 socket measurements (see figure 7—34).
  3. V3311B and V3311B socket measurements (see figure 7—43). Heed the High-Voltage Warning above.
  4. V3310, V3311 and V3312 socket measurements (see figure 7—43).

Signals

- If none on A scope, check →
  1. V612, V619, and V620.
  2. V612, V619, and V620 socket measurements (see figures 7—34 and 7—35).
- If no normal radar signals on both scopes, check →
  1. V3306 and V3306 socket measurements (see figure 7—43).
  2. K3300 and K3301 coils and contacts.
- If no MTI signals on both scopes, check →
  1. V3303, V3304, V3305 and V3306.
  2. V3303, V3304, V3305 and V3306 socket measurements (see figure 7—43).
  3. CR3300 and CR3301.
  4. Contacts of K3300.
- If MTI and normal radar signals not limiting as noted on A scope, check →
  1. CR3302, CR3303.
- If MTI signals are bi-polar, as seen on A scope, check →
  1. CR3300 and CR3301.
- If MTI signals cannot be phase-locked as seen on A scope, check →
  1. V350, V351, and V352.
  2. V350, V351, and V352 socket measurements (see figure 7—45).
- If MTI signals cannot be time-balanced, check →
  1. V1351 and V1350.
  2. V1351 and V1350 socket measurements (see figure 7—43).
  3. Replace C1353.
- If MTI signals cannot be amplitude-balanced, check →
  1. Adjustment of signal comparator according to TEST INSTRUCTIONS on panel nameplate.
  2. 1.2-microsecond delay line for continuity and/or short.
  3. Trace circuits from V2306 to V3303 and from V1306 to V3303 (see figure 7—113)
  4. V3300, V3301, and V3302.
  5. V3300, V3301, and V3302 socket measurements (see figure 7—43).

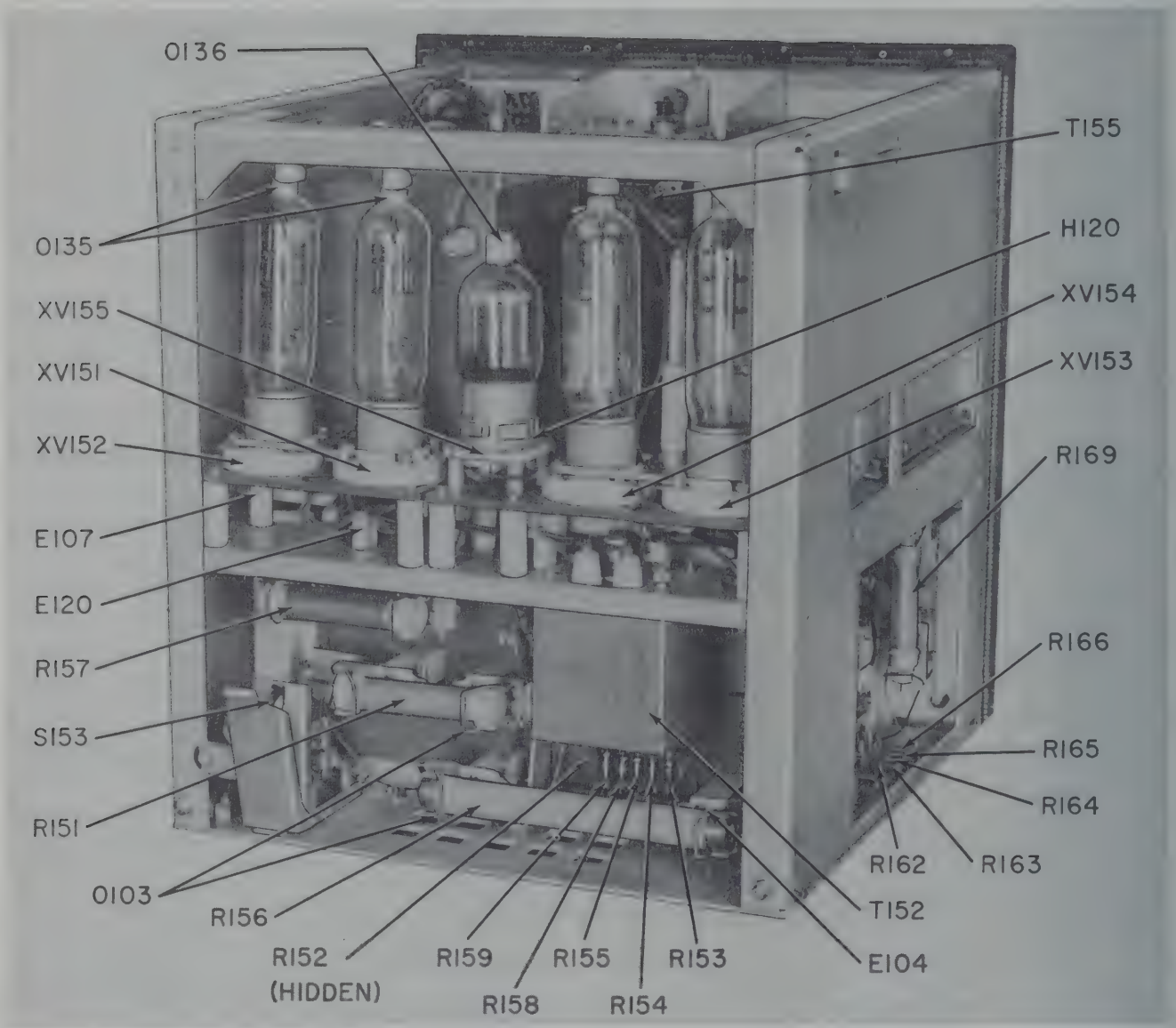

Figure 7—15. Modulator Component Locations (Rear)

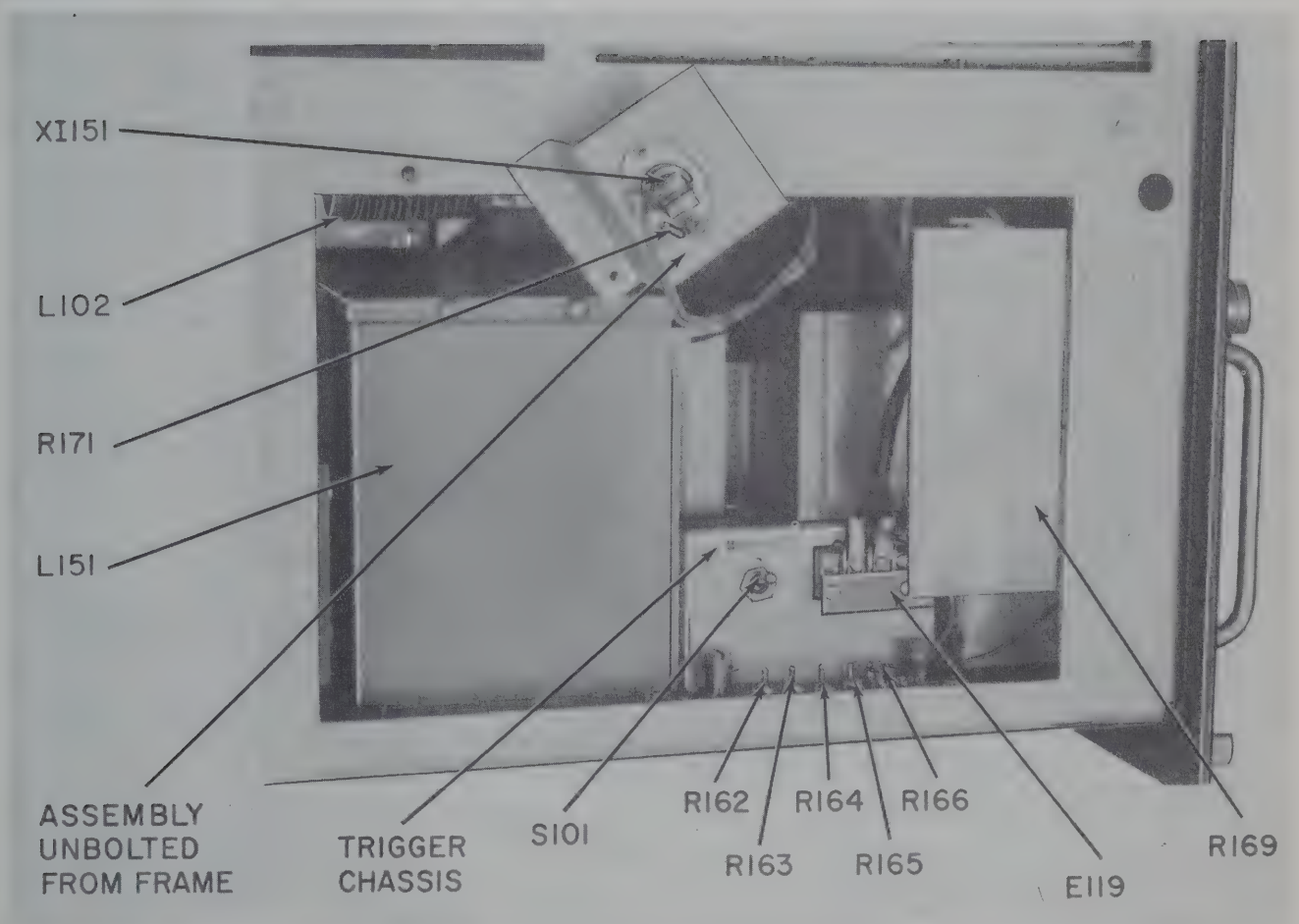

Figure 7—16. Modulator Component Locations (Lower Left)

(2) With the primary power source adjusted for 400 cycles, as indicated on the LINE FREQUENCY meter (power supply), synchronize the scope sweep at 400 cycles to the 400-cycle line supply.

Note

The scope sweep also can be synchronized to 400 cycles by use of an audio oscillator.

(3) Set REP. RATE CONTROL R167 to its full clockwise position.

(4) Unlock and adjust R110 until a single pulse waveform is reasonably stationary on the scope sweep.

(5) Lock R110 and disconnect the test equipment.

c. PROTECTIVE RELAY BALANCE ADJUSTMENT R168. *(See figure 7—1.)*

Protective relay balance adjustment R168 adjusts the magnetic balance of the two relay coils, K151A and K151B. The adjustment has to be such that, with the equipment operating normally, the contacts of K151A/B are closed.

If R168 is out of adjustment or if an irregularity exists in the transmitter (see paragraph 2.*b.*, Section 2), the modulator can be energized for only a few seconds at the most.

CAUTION

If the transmitter cannot be kept on the air because of operation of the protective relay, K151A/B, do not readjust R168 to correct the condition, or damage to the equipment may result.

Readjust R168 for only the following reasons:

(1) In an emergency, to maintain operation. (Be alert for an excessive arcing and abnormal magnetron current.)

(2) To compensate for slight change of circuit characteristics caused by component replacement in the protective circuit.

(3) To reset the adjustment because the control was inadvertently turned.

To adjust R168, proceed as follows (see figure 7—1):

(1) Make sure that the magnetron current is normal (40-44 ma). (If not, an irregularity exists and should be corrected before making adjustment.)

(2) With equipment in full operation, check the K151A/B voltages between terminals 1 and 5 (+), and also between terminals 6 (+) and 7 on the K151A/B terminal board adjacent to R168.

(3) Unlock and adjust R168 so that these voltages are equal. (Voltage should be between 4 and 5 volts.)

(4) Lock R168.

d. MODULATOR HIGH-VOLTAGE ADJUSTMENT. *(See figure 7—11.)*

The taps on the primary of high-voltage transformer T151 permit adjustment of the high-voltage d-c supply to keyer tube, V156. For 115-volt 400-cycle input, the primary taps affect the secondary voltage of T151 as follows:

Primary Taps	Total Secondary Volts
1-4	9100
2-4	9600
1-3	9900
2-3	10500

Need for adjustment is determined by the magnetron current. The magnetron current for 115-volt, 400-cycle input should be 42 ± 2 ma. To make the adjustment, proceed as follows:

(1) Turn on the equipment and allow at least a 15-minute warm-up.

(2) Adjust the line voltage for 115 volts 400-cycles as read on the meters, M401 and M403 (power supply unit). The line voltage can be adjusted using Variable Transformer TF-238/U. (If line frequency adjustment is not possible, adjust the T151 taps at a time when the line frequency is at an average value.)

(3) Note the magnetron current reading on the MAGNETRON CURRENT meter of the receiver-transmitter, and determine whether an increase or decrease in voltage is required.

(4) Shut down the equipment and adjust the primary taps as required (see tap positions above).

WARNING

Observe high-voltage warnings. Ground pin 2 of either V151 or V152 while making adjustment. Remove ground and close unit when checking adjustment.

CAUTION

Damage to magnetron V502 or impaired operation may result if the magnetron current exceeds 46 ma. Voltage regulation or line voltage adjustments may have to be made to ensure that this value is not exceeded during operation. The allowable line voltage tolerance is 115 volts ±5%.

(5) Check the over-all performance of the equipment and make any other adjustments necessary.

6. AZIMUTH AND RANGE INDICATOR IP-141A/TPS-1D.

a. TROUBLE-SHOOTING.

Generally, faults which have been directed to circuits of the azimuth and range indicator by the trouble-shooting guides should not be too difficult to find. The scope displays themselves are quite likely to give a clue to the defect.

As each scope tube has its own gating and sweep circuits, sweep trouble on only one tube is obviously caused by a fault in the sweep circuit of that particular tube. If the sweep is missing or erratic on both tubes, the incoming trigger signal may be at fault or d-c supply

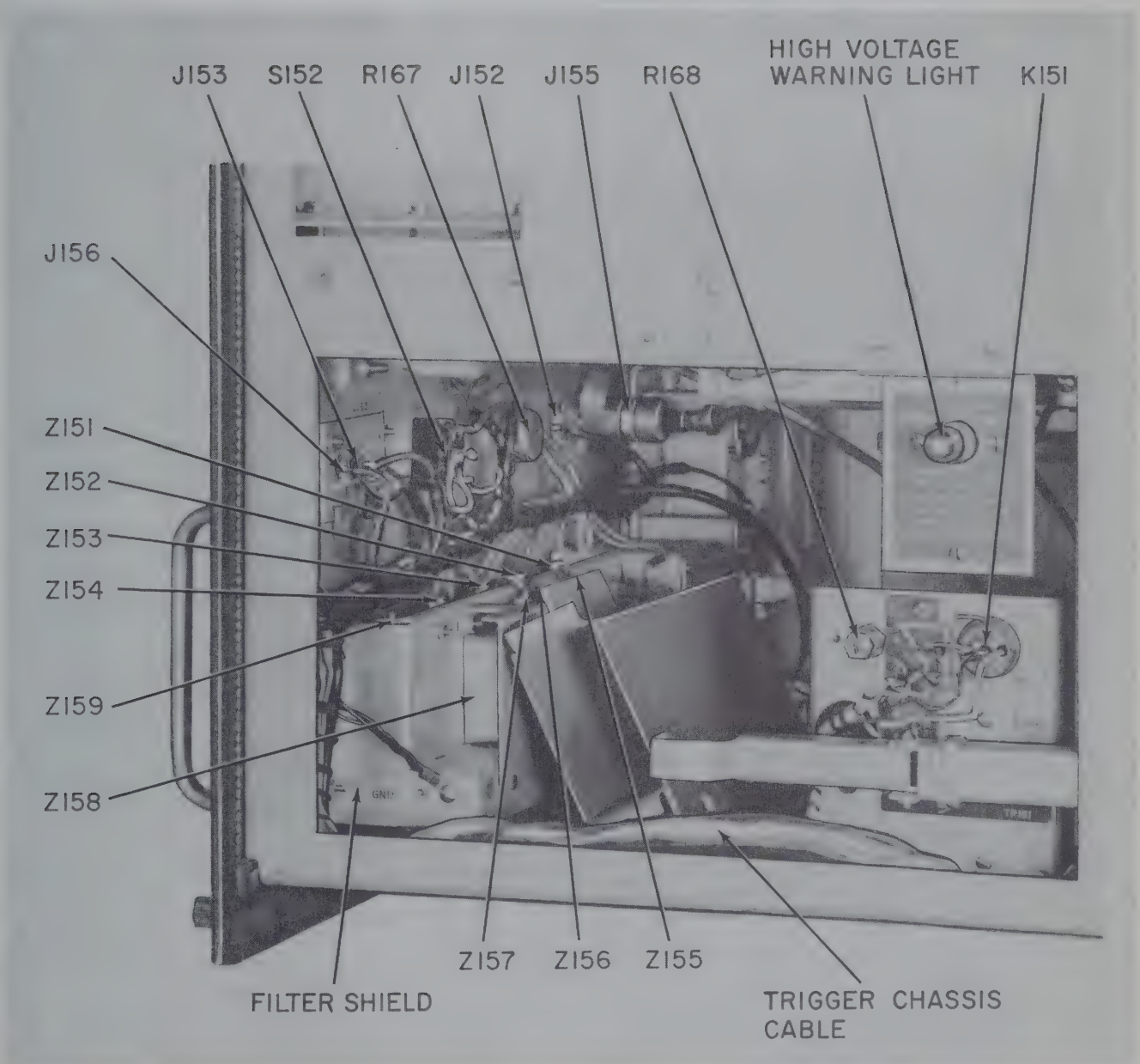

Figure 7—17. Modulator Component Locations (Lower Front)

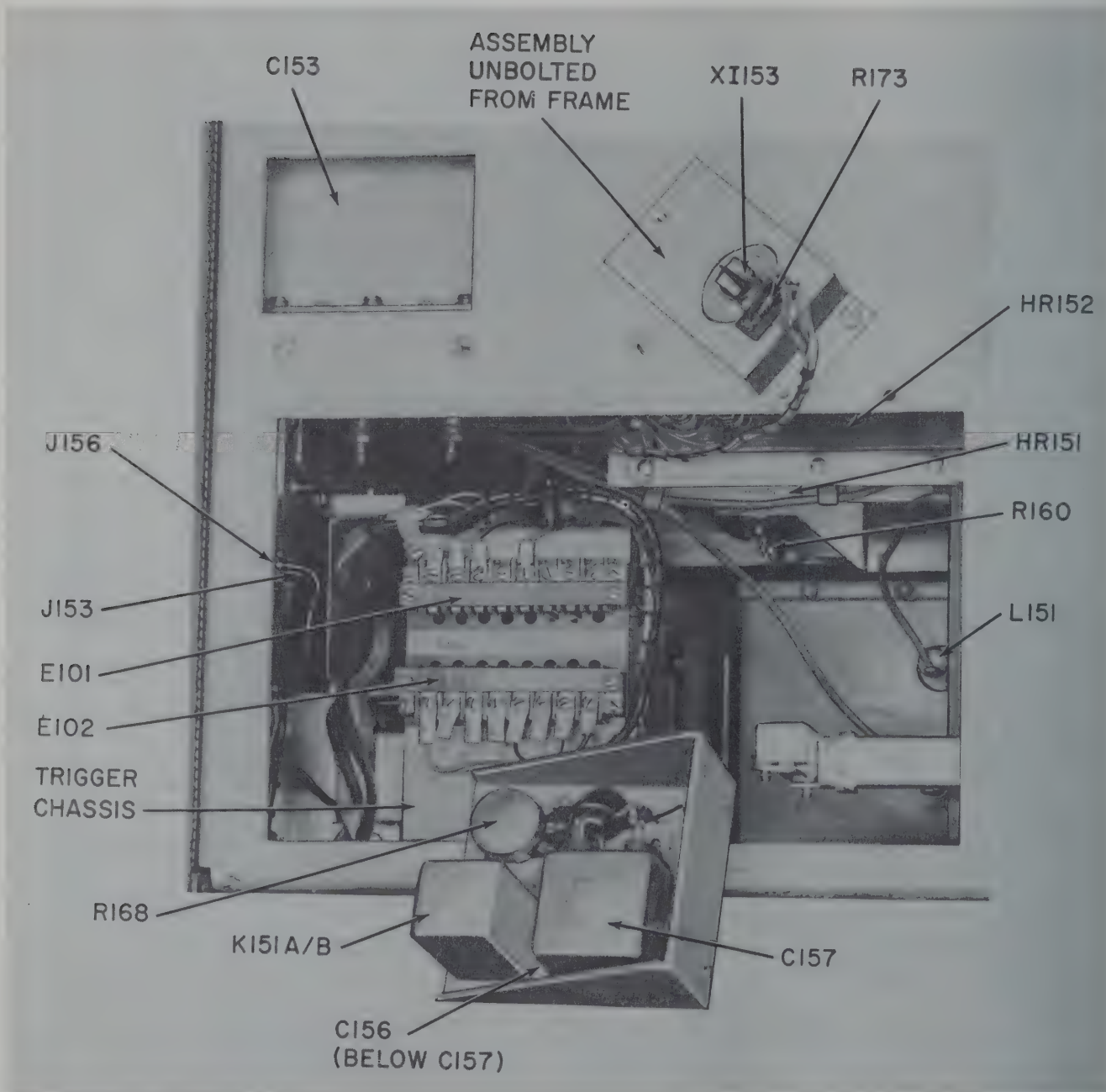

Figure 7—18. Modulator Component Locations (Lower Right)

voltages may require checking. Do not overlook the possibility of a radar screen being dark because of the absence of unblanking voltage. Turning up the intensity control will show if a scope tube can be illuminated, and if so, whether or not sweep voltage is present.

Likewise, an interpretation can be made of video signal irregularities. However, in the video circuit there are two tubes, V611 and V612, through which incoming video signals pass before being distributed to the A- and PPI-scope video circuits. Tracing for the cause of no video signals on both scope tubes could be started at V612, then working backwards. This procedure would be used after making a check of magnetron current, crystal current, etc., as given in the trouble-shooting guides.

Range mark signals pass through the individual A- and PPI-scope video amplifiers. Again, this knowledge suggests a quick method for checking video amplifiers.

Thus, it is possible, by thoughtful observation, to locate the cause of faulty operation in the azimuth and range indicator. Also, make good use of the servicing block diagram (figure 7—107) for signal tracing.

b. MULTIVIBRATOR AND BLOCKING OSCILLATOR RESISTOR REPLACEMENT.

Wherever two or more carbon resistors are used in combination, such as in a grid bias voltage divider, there is a possibility of having an unfavorable piling up of resistor value tolerances. Several instances of this possibility exist in the indicator circuit. The PPI gate multivibrator, for example, has a voltage divider consisting of R619 and R623 in the grid circuit. While the multivibrator would not fail if one of these resistors were to deviate 5% from its center value, it could fail if both resistors should deviate by 5% in opposite directions.

When making replacements of a voltage divider resistor, there is a possibility of a piling up of 5% resistance tolerances because of an off-center distribution of values of the 5% resistors carried in spare parts stock. The resistor manufacturer's grading and batching system may allow one group of resistors to lie almost entirely between 0 and +5%. Therefore, to avoid possible marginal operation of a multivibrator or blocking oscillator, make sure that a low-limit resistor is paired with another low-limit resistor and that the resistors are within ±5% of the specified value when replacing any of the following resistors:

R619, R623, R632	PPI gate multivibrator (V603A&B)
R1664, R1667, R1675	A gate multivibrator (V622A&B)
R1647, R1653	Strobe delay multivibrator (V621A)
R689, R690	Marks gate multivibrator (V614A)
R687, R688	Strobe blocking oscillator (V613B)
R622, R623, R624, R625	Marks blocking oscillators (V617A, V618B)

c. CHECKING CIRCUITS UNDER OPERATING CONDITIONS.

To check circuits under operating conditions, the unit interlock may be disabled as outlined in paragraph 1.*g.*, this section. *Observe all high-voltage warnings.* The scope anode high-voltage circuits are located on the lower left front corner of the chassis. Keep clear of this area especially the ceramic terminal strip, E602. *Do not operate the unit with the phenolite cover removed* (shown removed in figure 7—29). When checking these circuits with the cover removed, discharge all capacitors with an insulated screwdriver, holding it in firm contact with the chassis when making contact to high-voltage points. All socket base pins can be reached

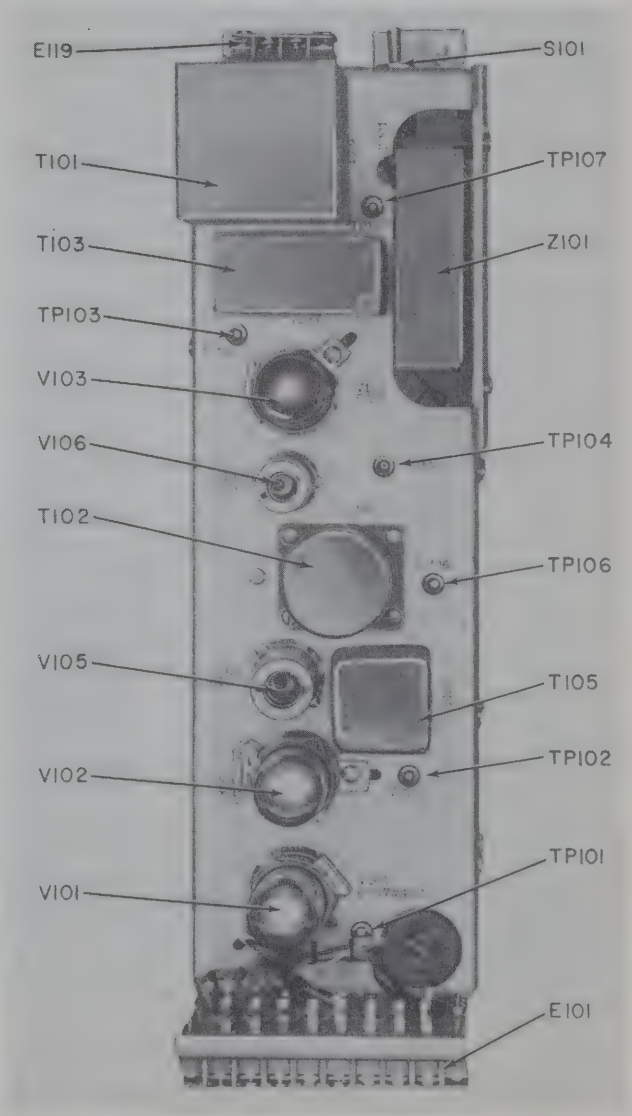

Figure 7—19. Trigger Chassis Component Locations (Top Side)

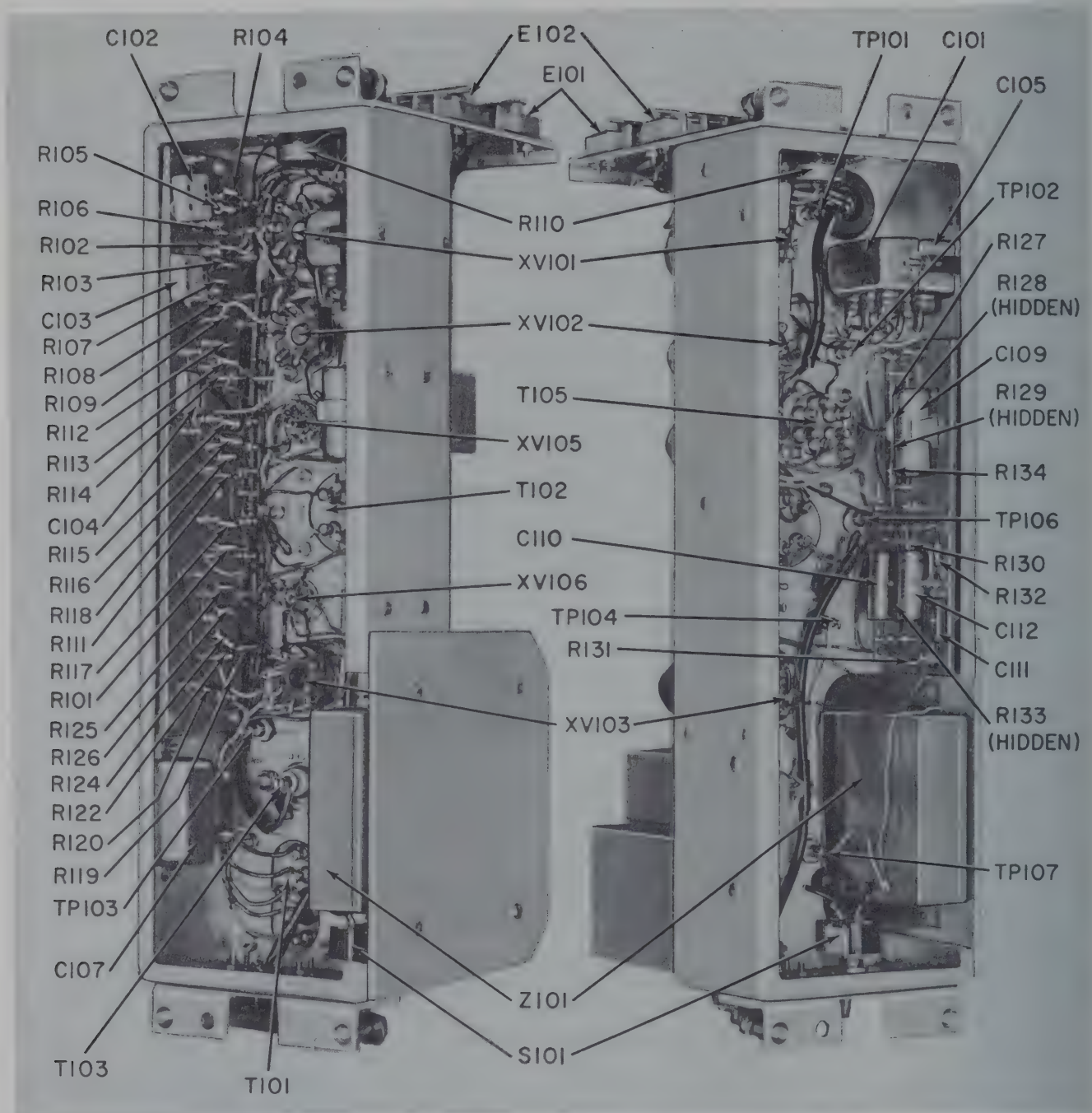

Figure 7—20. Trigger Chassis Component Locations (Bottom Side)

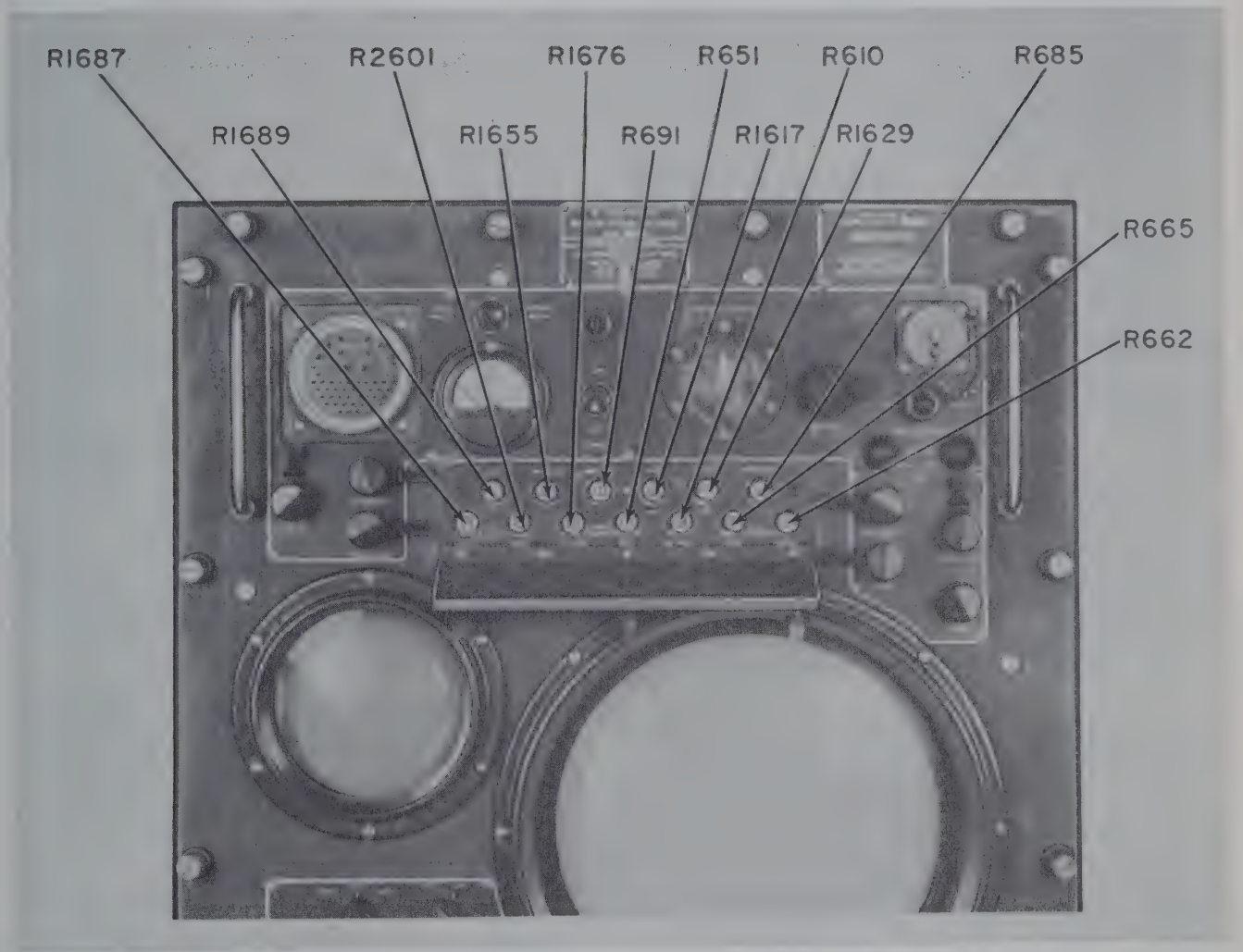

Figure 7–21. Indicator Panel Screwdriver Adjustments

for checks from the rear of the chassis (as shown in figure 7—25). Voltage and resistance measurements are shown in figures 7—34 and 7—35. Component locations are shown in figures 7—21 through 7—33.

d. SCOPE HIGH-VOLTAGE SUPPLY MEASUREMENTS.

The A-scope uses a +1500-volt and a −1500-volt d-c potential. The PPI scope uses a +8000-volt potential. All voltages are obtained from the high-voltage supply of V626. This supply is capable of sustaining lethal currents, and as means are provided for checking the supply at a safe voltage, direct measurement of the high voltage is not recommended.

Test points TP611 and TP612 provide means for checking the −1500 and +8000 voltages respectively. TP611 is shown in figure 7—29. TP612 is located on the inward side of the high-voltage chassis, adjacent to the electrostatic shield of V625. As the +1500 voltage is obtained on the +8000-volt side of the power supply circuit, the measurement at TP612 is indicative of the +1500 and +8000 voltages.

For normal voltages the average readings to ground at the test points, with a 20,000-ohm-per-volt meter, should be as follows:

TP611	−440 v DC
TP612	+360 v DC

Poor scope illumination or inability to obtain proper adjustment of the scope traces usually points to trouble in the scope high-voltage power supplies. If readings within ±10% of the given values are obtained at TP611 and TP612, the high-voltage power supply can be eliminated as the cause of trouble.

If readings of more than ±10% are obtained, the power supply components should be checked with an ohmmeter, after first fully discharging capacitors C665 through C668. When discharging these capacitors, use a well insulated screwdriver, and always make contact first to ground.

e. ADJUSTMENTS.

(1) GENERAL.

Most of the screwdriver adjustments are located behind the hinged cover (marked CALIBRATION CONTROLS) on the upper portion of the unit panel (see figure 7—21). These adjustments can be identified by their control names, the controls themselves being mounted on the subchassis at the rear of the unit and operated by flexible cables. Five of the six screwdriver controls not adjustable from the panel also are mounted on the subchassis. The sixth control, R2619, is mounted on a crossmember at the top and front of the chassis.

The twelve test points are conveniently located immediately adjacent to the tubes of the circuits with which they are associated. All tubes except the scope tubes are mounted round the outside edge of the subchassis.

(2) PPI SWEEP GATE R626. *(See figure 7—22.)*

If this control is set for too long a gate period, erratic triggering of the PPI sweep trace (all ranges) may result. If set for too short a period, the sweeps of all ranges will be short in both physical length and range length as determined by counting markers.

Note

Do not confuse short sweeps caused by R626 misadjustment with that caused by R651 (SWEEP LENGTH) misadjustment. R651 may be adjusted to produce short sweeps; however, a count of the range markers will indicate that the full range is being displayed, but on a short sweep. (See paragraph (3) below for R651 adjustment.)

If considerable readjustment appears necessary or if frequent adjustment is required, check for a value change in the resistors of the V603 circuit.

To adjust R626, proceed as follows:

(*a*) With the antenna stopped, set the PPI range to 160 miles.

(*b*) Unlock and adjust PPI SWEEP LENGTH adjustment R651 (front panel) so that the end of the PPI sweep can be seen.

(*c*) Unlock and adjust R626 so that the sweep extends slightly beyond 160 miles, as measured by the markers.

Note

If the azimuth and range indicator is preset for 10-mile markers, the sweep should extend slightly beyond the 16th marker. If the indicator is preset for 5- and 25-mile markers, set the sweep to extend, beyond the 6th marker, a distance equal to half the spacing of the 5th and 6th markers.

(*d*) Check the sweep length by markers on the 20-, 40-, and 80-mile ranges, and readjust R626 if a slight readjustment will correct any short sweep lengths.

Note

If any sweep lengths are short by more than 5%, check the related gate length capacitor (C610 through C613) for leakage or change of value. Note that capacitors are added in parallel to increase the sweep range.

(*e*) Lock R626.

(*f*) Readjust and lock R651 at the position which gives a full sweep on all scales.

The gate waveform at TP602 (figure 7—22) is given in the servicing block diagram (figure 7—107).

(3) PPI SWEEP LENGTH R651. *(See figure 7—21.)*

If all PPI sweep traces are short physically and yet the range lengths of the traces as measured by markers, are correct, R651 may require adjustment. Also, if all PPI sweep traces are too long physically, as determined by the number of range marks, adjustment of R651 may be necessary.

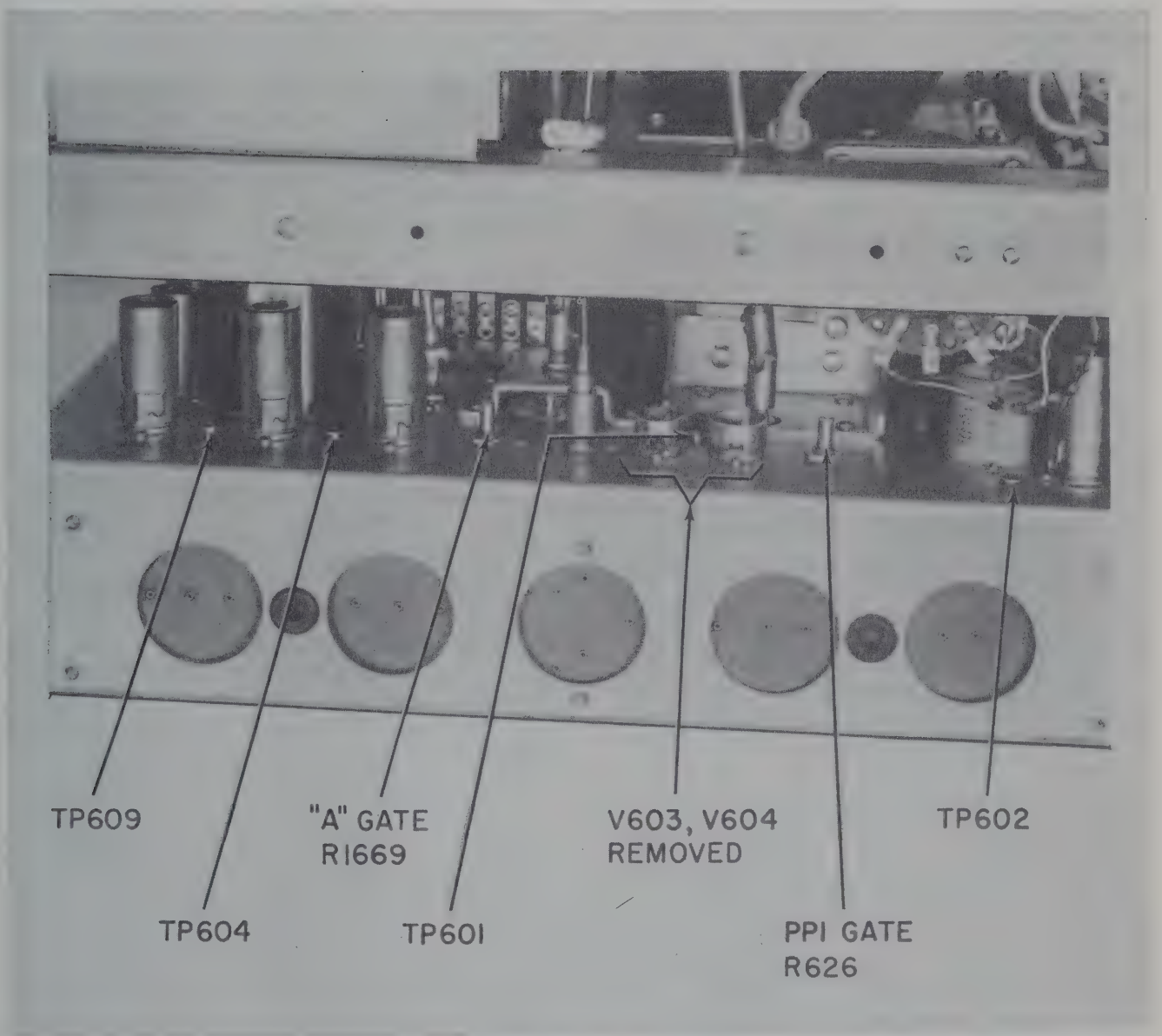

Figure 7—22. Indicator Adjustments and Test Points (Bottom Side)

The need for readjustment may be due to a defective resistor in the circuit of V608, or the tube itself could be at fault. If considerable correction appears necessary, check these components first before making an adjustment.

To adjust R651, proceed as follows:

(*a*) With the antenna stopped and the PPI RANGE SELECTOR switch on 160 miles, unlock and adjust R651 so that the sweep trace extends to the full radius of the PPI-scope tube.

(*b*) Check the sweep lengths on the 20-, 40-, and 80-mile ranges.

(*c*) If any sweep length is not more than 1/4 inch short, readjust R651 for coverage of the shortest trace.

Note

It more than 1/4 inch short, check for the cause, using TP602, TP603, (figures 7—22 and 7—26) and the servicing block diagram (figure 7—107). Also see paragraph (2), sweep gate R626, above.

(*d*) Lock R651 when the adjustment is complete.

(4) COARSE INTENSITY R660A/B. *(See figure 7—23.)*

When it is found that PPI INTENSITY control R659 is near either end of its travel when adjusted for the desired PPI illumination, R660A/B requires adjustment.

To adjust R660A/B, proceed as follows:

(*a*) With the antenna rotating, set R659 to its mid-position.

(*b*) Unlock and adjust R660A/B for the average illumination used on the PPI scope.

(*c*) Lock R660A/B.

If considerable readjustment is necessary, check the values of R659, R660A/B, and R661. Also check V609.

(5) PPI CENTERING R662 AND R665. *(See figure 7—21.)*

The need for recentering the zero-range end of the PPI sweep should be more or less obvious. Recentering is usually necessary if the PPI tube, V609, is replaced.

Resistors R662 and R665 control current through coils whose fields are at right angles to each other, the coils being incorporated in focus coil assembly L602. The electromagnetic fields of these coils influence the path of the V609 beam at right angles to each other.

To adjust the centering, unlock and adjust R662 and R665 so that the zero-range end of the PPI sweep is located at a fixed point in the center of the screen, as viewed with the sweep trace rotating.

(6) A-SCOPE SWEEP GATE R1669. *(See figure 7—22.)*

If the A-scope sweep trace is short physically and a count of markers on any or all ranges indicates that the sweep is also short in range, adjustment of R1669 may be necessary. Also, if the sweep is erratic on any or all ranges, the A gate may be too long, and adjustment of R1669 is required.

If it is apparent that a considerable amount of readjustment is necessary, check the V622 circuit for a defective resistor which may have changed value. If a component of the V622 circuit has been replaced, it is quite likely that R1669 will require readjustment to compensate for the allowable variations in component tolerances.

To adjust R1669, proceed as follows:

(*a*) Set the A-scope RANGE SELECTOR switch to 160 miles, with the A-scope VIDEO GAIN control turned down so that no signals are present on the A-scope trace.

(*b*) Unlock and adjust A-scope SWEEP LENGTH control R1676 (indicator front panel) so that the right end of the sweep trace can be seen.

(*c*) Unlock and adjust R1669 so that the sweep trace extends slightly beyond the 160 miles, as determined from the range markers.

(*d*) Check the 20-, 40-, and 80-mile sweeps for adequate sweep length, as determined by the range markers.

(*e*) If one or more sweep lengths are not short by more than 5%, readjust R1669 so that the shortest trace just covers the indicated range.

Note

If one or more sweep lengths are more than 5% short, check the contacts of S609C. Also check the gate length capacitors, C649-C652. Note that these capacitors are added in parallel to increase gate length.

(*f*) Lock R1669.

(*g*) Adjust and lock R1676 in a position which produces a sweep trace length equal to the diameter of the A-scope tube.

(*b*) Reset the A-scope VIDEO GAIN control for a signal deflection of approximately one inch.

(7) A-SCOPE SWEEP LENGTH R1676. *(See figure 7—21.)*

If all sweep lengths are short physically but correct in range length, as measured by markers, R1676 may require adjustment. Also, adjustment of R1676 may be necessary if all sweep lengths extend beyond the face of the A-scope tube, V625. This latter condition can be detected by counting the number of markers on each range.

When R1676 is correctly adjusted, the sweep traces should cover the tube diameter or slightly beyond. If considerable readjustment of R1676 is required, check the waveform at TP610; see the servicing block diagram (figure 7—107) and components of V623 and V624.

To adjust R1676, proceed as follows:

(*a*) With the A-scope VIDEO GAIN control turned down, unlock and adjust R1676 so that the shortest of the four range sweeps just covers the diameter of the A-scope tube, V625. (Recenter the trace if necessary; see below for procedure.)

(*b*) Lock R1676 and adjust the VIDEO GAIN control for approximately one inch of signal deflection.

(8) A-SCOPE CENTERING R1687 AND R2601. *(See figure 7–21.)*

R1687 adjusts the horizontal position of the A-scope trace, while R2601 sets the vertical position of the trace. To adjust the trace centering, unlock and adjust the appropriate control to position the trace across the center of the A-scope, with the left end of the sweep just visible at the left side of the scope tube. Lock R1687 and/or R2601 when the adjustment is complete.

If considerable readjustment is necessary, check the circuits of either R1687 or R2601 for a defective component. Readjustment is usually necessary when the A-scope is replaced.

(9) STROBE LIM. ADJ. R1655. *(See figure 7–21.)*

R1655 adjusts the timing of the A-scope strobe sweep (10 miles). Adjustment is required if the maximum strobe position is not at 20 to 160 miles, as determined by the strobe marker on the PPI.

The procedure for adjustment is as follows:

(*a*) Set the PPI-scope RANGE SELECTOR switch to 160 miles and the A-scope RANGE SELECTOR switch to EXP.

(*b*) Turn the RANGE STROBE control (R1657) to its extreme clockwise position.

(*c*) Unlock and adjust R1655 so that the PPI strobe marker is at 160 miles, as determined by the PPI markers.

Note

If it is impossible to obtain the required adjustment, check the voltages and components of V621.

(*d*) Lock R1655 when the adjustment is complete.

(10) A-SCOPE ASTIGMATISM R1689. (*See figure 7–21.*)

This adjustment corrects for an out-of-focus condition

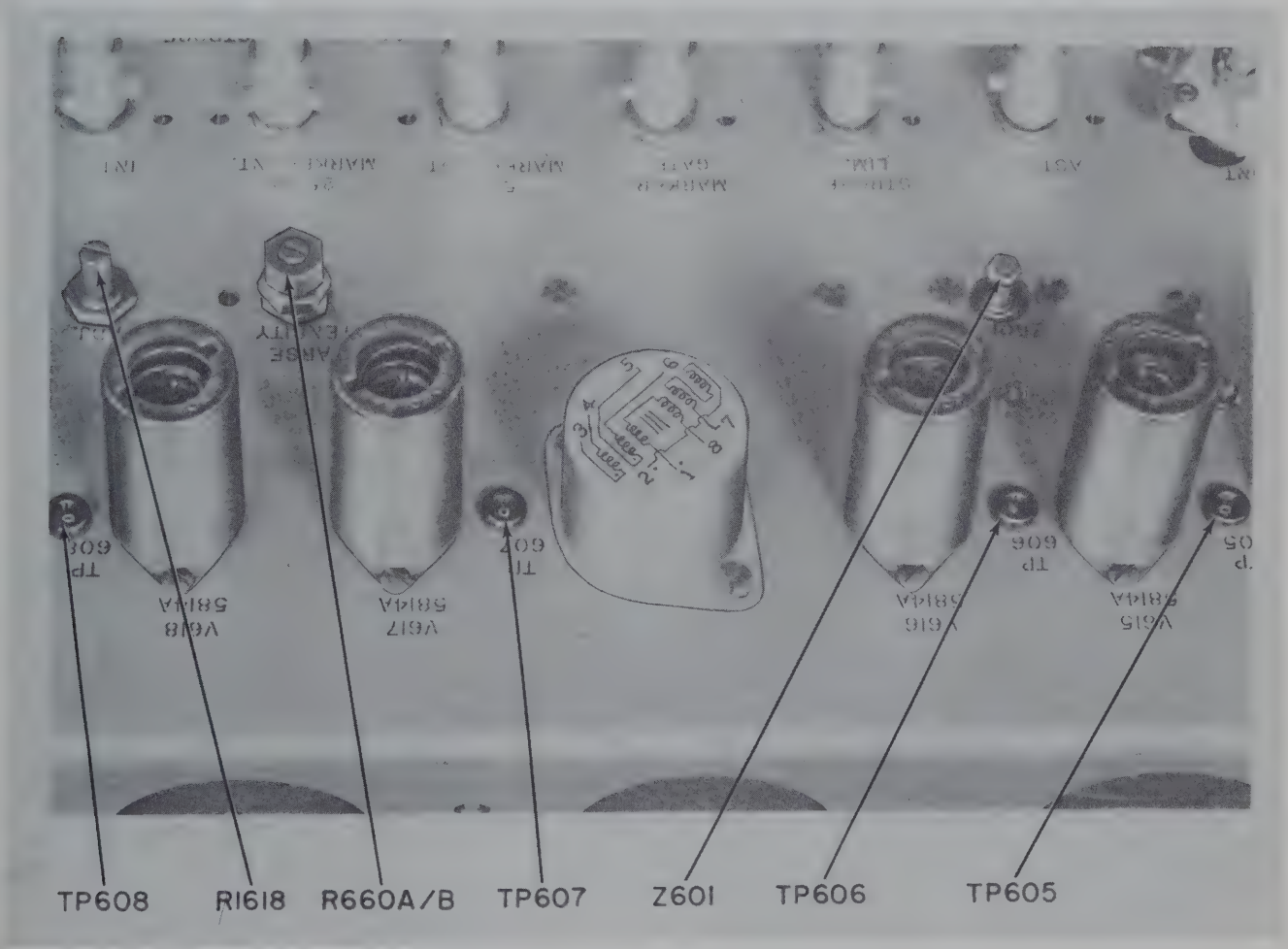

Figure 7–23. Indicator Adjustments and Test Points (Top Side)

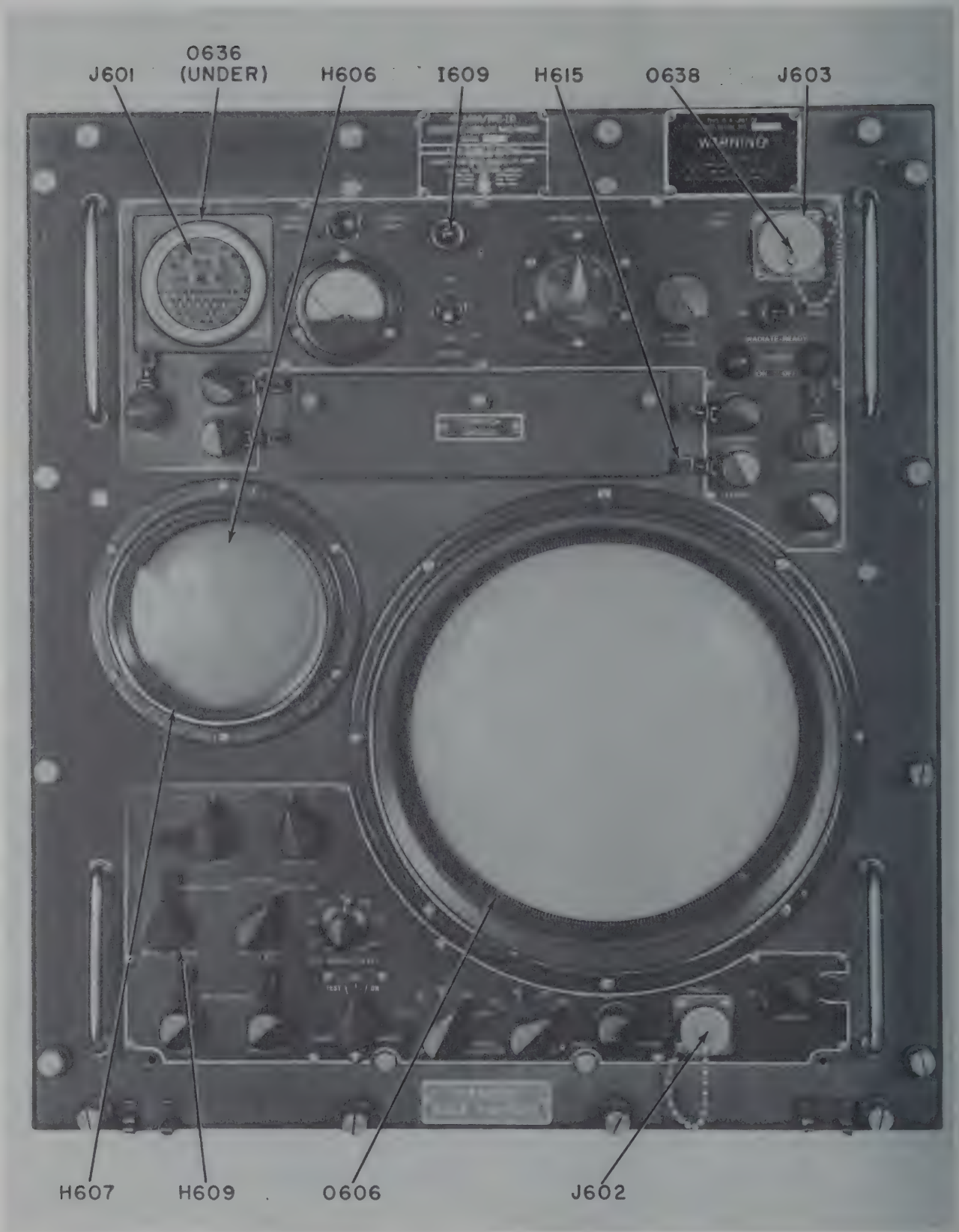

Figure 7—24. Indicator Panel Component Locations

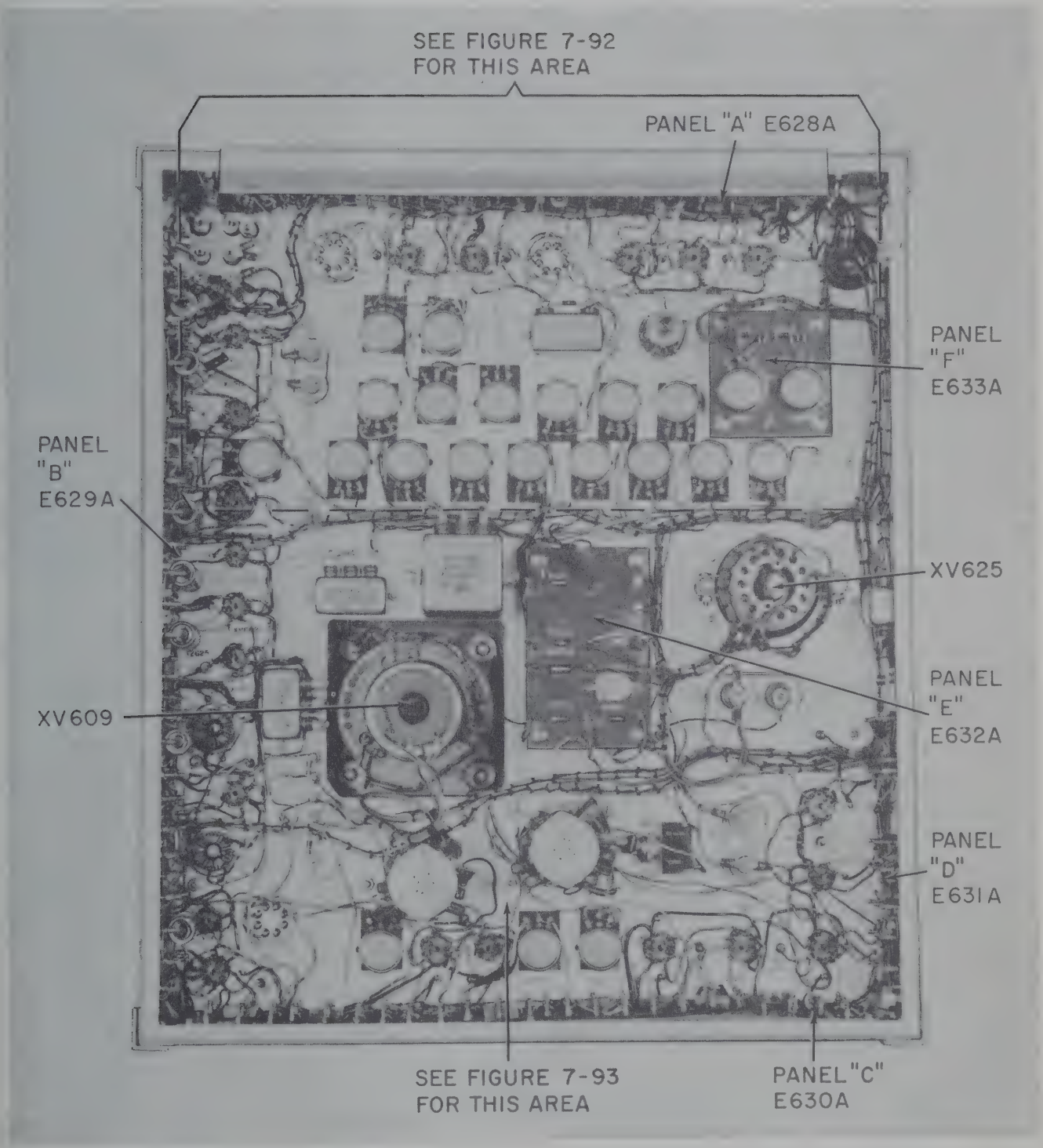

Figure 7—25. Indicator Component Locations (Rear)

which may be present on a portion of the A-scope. Unlock and set this control for the best over-all focus, readjusting the A-scope FOCUS control R1696 as required to effect the optimum adjustment.

If R1689 requires a considerable degree of readjustment, check R1689 and R1690. Readjustment of R1689 is usually necessary if A-scope, V625, is replaced. Be sure to lock R1689 when the adjustment is complete.

(11) STROBE INT. R685. *(See figure 7–21.)*

This adjustment controls the intensity of the strobe marker on the PPI. To set R685, proceed as follows:

(*a*) Set the A-scope RANGE SELECTOR switch to EXP.

(*b*) Set the PPI-scope RANGE SELECTOR switch to 160 miles.

(*c*) Unlock and adjust R685 so that the strobe marker can plainly be seen without interfering with PPI images.

(*d*) Lock R685.

If the strobe marker cannot be adjusted for sufficient brightness, check R685 and the V613 circuit.

(12) A-SCOPE DEFLECTION BALANCE C659. *(See figure 7–25, Panel E.)*

This adjustment controls the electrostatic balance of the V625 horizontal deflection plates in relation to the vertical deflection plates of V625. If the two sets of deflection plates are unbalanced, the vertical deflection will not be at right angles to the base-line trace, and signals and markers will appear to lean.

Adjust C659 as follows:

(*a*) Turn the A-scope VIDEO GAIN control, R683, fully counterclockwise so as to remove radar signals.

(*b*) Turn the RANGE MARKS MILES switch to ON.

(*c*) Adjust C659 so that the range marks are at right angles to the base-line trace.

Slight adjustment may be required when V625 is replaced. If the markers cannot be adjusted as indicated, V624 or C660 may be defective. Check by replacement.

(13) MARKER GATE R691. *(See figure 7–21.)*

This adjustment sets the length of the marker gate. If R691 is set for too short a gate length, one or more markers will be missing on the far end of the A- and PPI-scope traces when the ranges are set at 160 miles. If R691 is set for too long a gate, the markers will jitter or appear to be blurred.

To adjust R691, proceed as follows:

(*a*) Turn A-scope VIDEO GAIN control R683 fully counterclockwise so as to remove radar signals.

(*b*) Set the A-scope RANGE SELECTOR switch to 160 and the MARKER RANGE MILES switch to TEST.

(*c*) Unlock and turn R691 counterclockwise until the effective position of R691 is observed by the progressive elimination of markers on the right end of the A-scope sweep trace.

(*d*) Turn R691 clockwise to a position slightly beyond the 160-mile range point of the sweep trace, as determined by the reappearing range marks.

(*e*) Lock R691.

If it is impossible to obtain the adjustment as given, check V614 and the voltage and resistance measurements of the V614 circuit.

(14) MARKER CALIBRATION Z601. *(See figure 7–23.)*

The equipment is shipped with Z601 adjusted to produce 10,000-yard markers, which are approximately equal to markers with a 5-nautical-mile spacing. Actually, this initial adjustment represents a -1.3% error when the markers are interpreted in nautical miles.

Adjustment of Z601 is necessary if the measured range of objects is not within the allowable tolerance, or if nautical-mile measurements are to be used and it is desired to eliminate the -1.3% error of the initial factory adjustment.

The allowable tolerance is $\pm(0.03R + K)$. If the range is measured in nautical miles, R is in miles and K is equal to 1 mile. If the range is measured in yards, R is in yards and K is equal to 2000 yards. If the range is 10 miles, the allowable range error is $\pm(0.03 \times 10 + 1)$ miles, or ± 1.3 miles. If measurements are made in yards, the allowable range error is ± 2600 yards at a range of 20,000 yards.

If recalibration is contemplated because of range errors, first determine, if possible, whether or not the error is approximately a fixed amount at all ranges. If this is so, the range marker calibration is quite likely to be correct, but a defect in triggering the marker oscillator exists. In this event, check the waveform at TP605 for conformity with the waveform given in the servicing block diagram, figure 7–107. Also check V614A/B and its circuit.

To adjust Z601, proceed as follows:

(*a*) With the RANGE MARKS (MILES) (YARDS) switch in the ON position, check the waveforms at TP605 and TP606 for steadiness and compliance with those given in the servicing block diagram (figure 7–107).

(*b*) Connect the vertical plate jack of Oscilloscope TS-239/AP to TP607 (figure 7–23).

(*c*) Adjust the horizontal sweep of TS-239/AP for a length of approximately 150 microseconds, and also set TS-239/AP for 10-microsecond markers.

(*d*) On the TS-239/AP, adjust the sweep length so that the reference scale can be used to interpolate between the 10-microsecond markers.

(*e*) Using the TS-239/AP 10-microsecond markers, measure the spacing between the AN/TPS-1G markers.

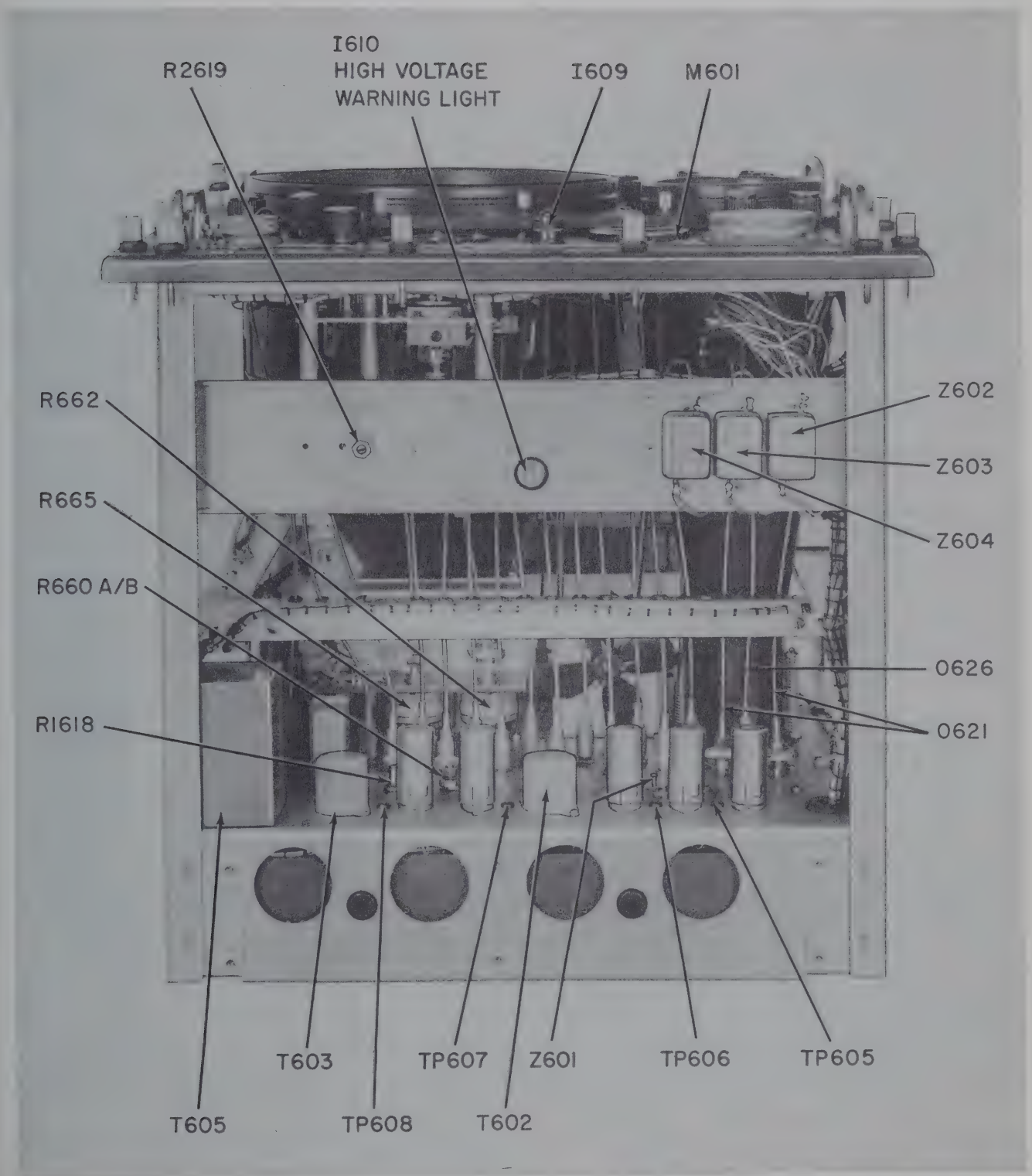

Figure 7—26. Indicator Component Locations (Top Side)

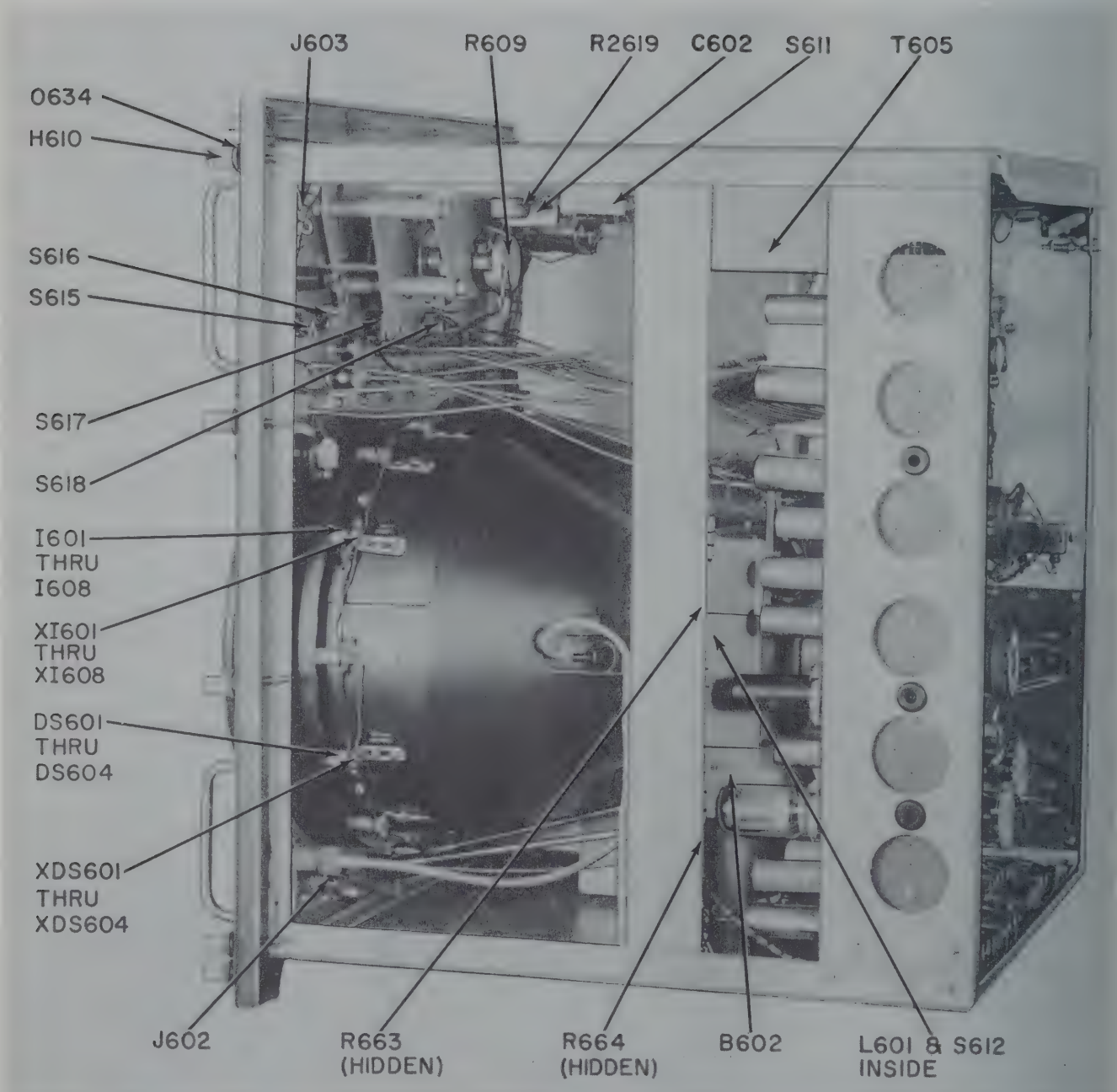

Figure 7—27. Indicator Component Locations (Right Side)

Note

If the internal connections of the AN/TPS-1G are set for 5—25-mile (10,000-, 50,000-yard) markers, the markers should be 61 microseconds apart. If the internal connections of the AN/TPS-1G are set for 10-mile (20,000-yard) markers, the markers should be 122 microseconds apart. If the markers have been previously recalibrated for nautical miles, as given below, the marker spacing should be 61.8 or 123.6 microseconds respectively.

(*f*) If the calibration is off a detectable amount or it is desired to change the original calibration for nautical-mile measurements, carefully adjust Z601 to bring the marker spacing as close as possible to the figures given directly above.

Note

If it is found necessary to change the setting of Z601, it is advisable to glyptal the threaded shank of the oscillator coil slug to prevent possible frequency drift due to vibration.

(*g*) Disconnect the test equipment.

(15) CONNECTIONS FOR 5- AND 25-MILE OR 10-MILE MARKERS. *(See figure 7—25, Panel A.)*

The link connections in the grid circuits of the marker blocking oscillators, V617 and V618, can be connected so that V617 is producing 5-mile markers for the 20- and 40-mile ranges while V618 is producing 25-mile markers for the 80- and 160-mile ranges. The links also can be connected so that 10-mile markers are being produced by both V617 and V618 for all ranges.

To produce 5- and 25-mile markers, make link connections as follows:

(*a*) Connect A to D.

(*b*) Connect B to C.

(*c*) No jumper from D to Z (R1619 unshorted).

To produce 10-mile markers, make link connections as follows:

(*a*) Connect A to C.

(*b*) Connect B to D.

(*c*) Connect D to Z (R1619 shorted).

It is necessary to adjust R1618 for the marker link connections in use. See following paragraph for adjustment of R1618.

(16) MARKER B.O. ADJ. R1618. *(See figure 7—23.)*

When 5-mile (10,000-yard) and 25-mile (50,000-yard) markers are in use and the 25-mile markers are blurred or erratic, R1618 may require adjustment. When 10-mile markers are in use, all markers may be blurred or erratic if R1618 requires adjustment.

Resistor R1618 should be adjusted to provide steady 25- or 10-mile markers, as the case may be. R1618 can be adjusted to a position which produces steady markers, but the markers may have incorrect spacing. When using 5- and 25-mile markers, the spacing of 25-mile markers can be checked by use of the TEST position of the RANGE MARKS MILES switch and the A-scope 80- or 160-mile range. The 5-mile markers then are superimposed on the 25-mile markers, and thus, the 25-mile markers can be checked against the 5-mile markers.

When 10-mile markers are used, the markers can be checked by observing the number of markers for each scale. If R1618 is correctly adjusted, there should be 2 markers on the 20-mile scale, 4 on the 40, 8 on the 80, and 16 on the 160.

(17) MARKER INTENSITY R1617 AND R1629. *(See figure 7—21.)*

These controls adjust the intensity of the markers on the PPI-scope only, the amplitude of the A-scope markers being dependent on the chosen circuit values, which give a deflection of approximately one inch.

Resistor R1617 adjusts the marker intensities on the 20- and 40-mile scales, while R1629 adjusts the marker intensities on the 80- and 160-mile scales. This is true whether the marker jumper connections of paragraph (13) above are connected for 5- and 25-mile markers or are connected for 10-mile markers.

To adjust R1617 and R1629, unlock these controls and adjust for clean-cut markers of moderate intensity. If the marker intensity is set for too high a level, the markers are likely to interfere with small images on the PPI.

If it is impossible to obtain proper adjustment of R1617 and R1629, check these controls and their associated circuits, which include S608 (MARKER RANGE MILES switch). It is assumed that the A-scope markers are normal.

(18) ANTENNA SPEED R2619. *(See figure 7—26.)*

If the antenna rotation speed is not within $+1/2$ rpm of the indicated speed, R2619 may require adjustment. R2619 sets the speed range over which ANTENNA ROTATE control R609 can be adjusted.

To adjust R2619, set R609 for 15 rpm (either direction) on the ANTENNA SPEED dial, then unlock and adjust R2615 for 15 rpm of the antenna, as obtained by counting rpm. Check the operation at 15 rpm in the reverse direction and lock R2619.

If R2619 cannot be adjusted to 15 rpm, check R2619. Also see servo amplifier adjustments, paragraph 10.*b.*, this section.

(19) SYNCHRO ALIGNMENT CHECK AND ADJUSTMENT.

To align synchro B602, proceed as follows:

(*a*) With the system shut down, remove the cover of the antenna base drive motor assembly (as shown in figure 7—88).

(*b*) On E752 (drive motor assembly), connect terminal 8A8 to 8A9 (as shown in figure 7—88).

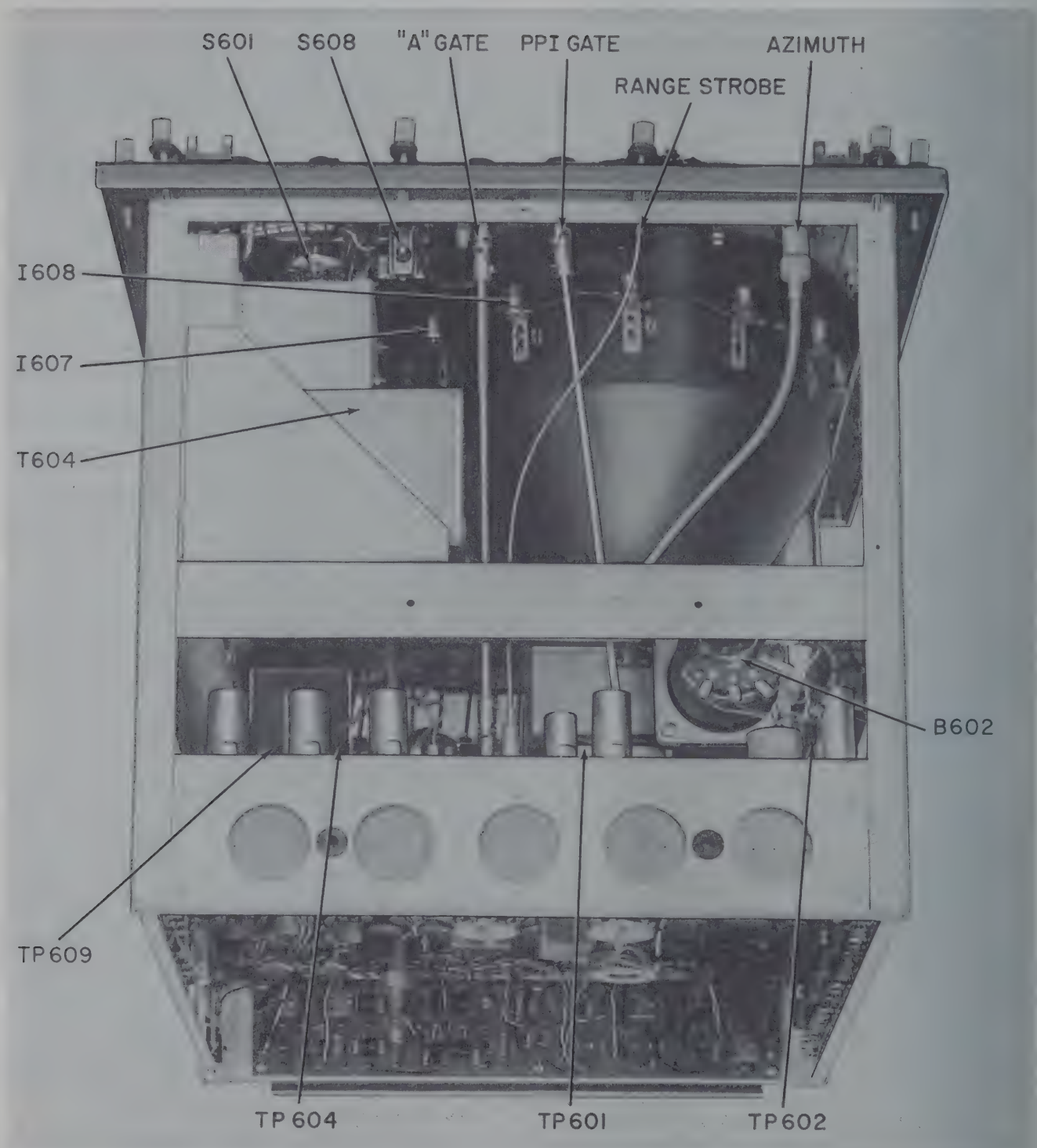

Figure 7—28. Indicator Component Locations (Bottom Side)

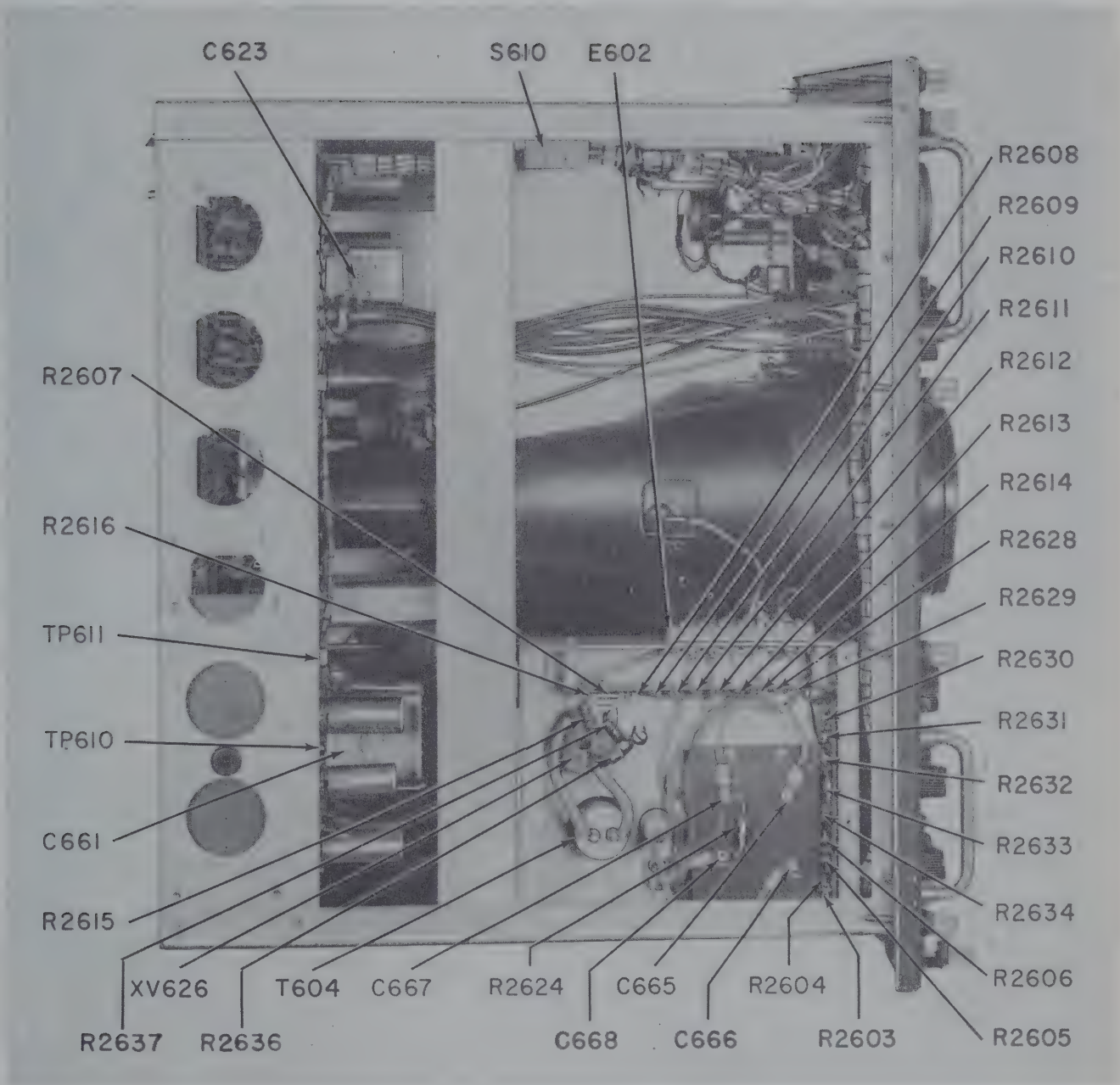

Figure 7—29. Indicator Component Locations (Left Side)

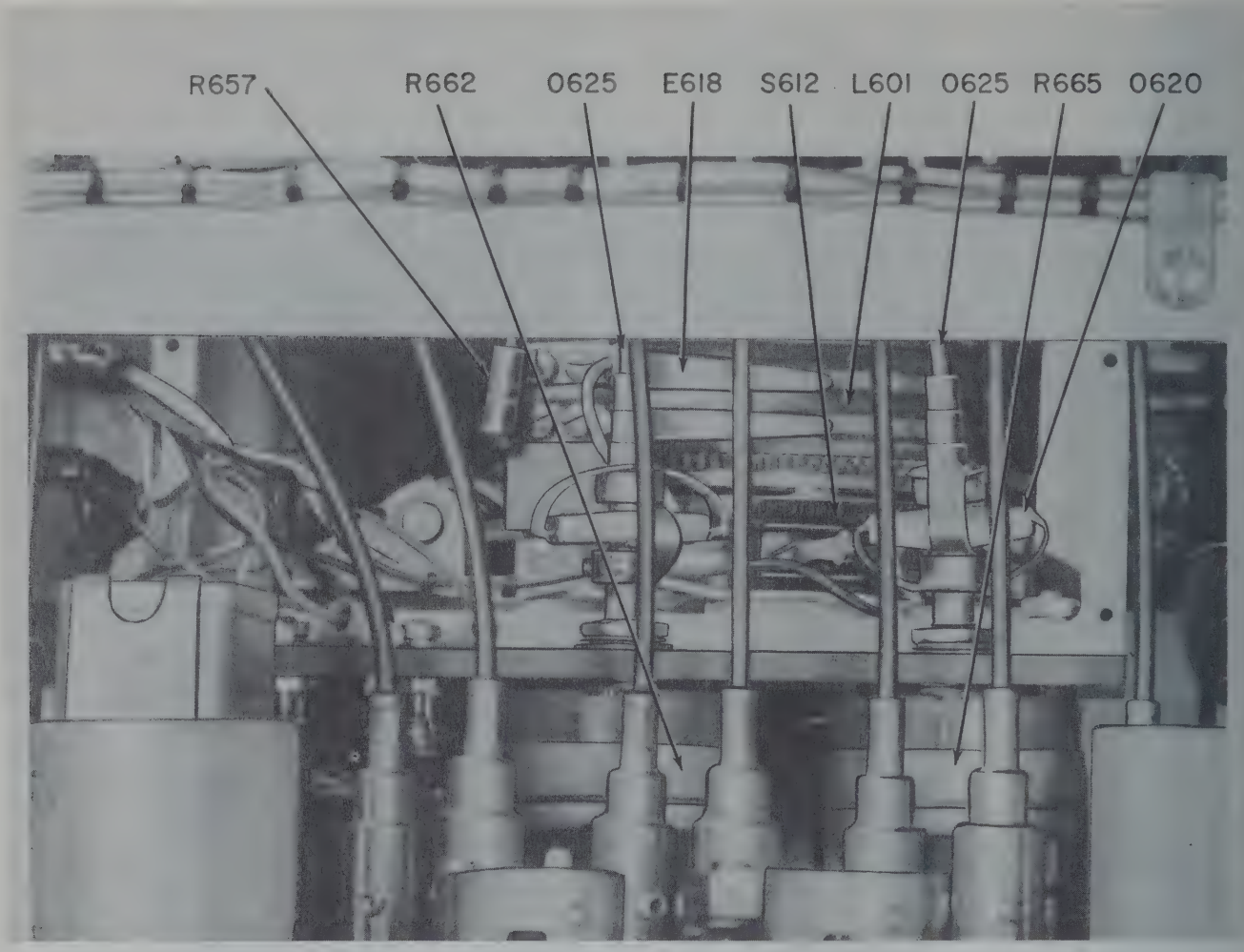

Figure 7—30. Indicator Component Locations (PPI Yoke)

Note

This connection closes one side of relay K704, which applies zeroing voltage to the synchro system.

(*c*) Pull the indicator unit chassis out until the cover of deflection coil L601 is accessible. Remove the cover of the deflection coil assembly (see figure 7—30).

(*d*) Energize the system, and after a 5-minute warm-up, rotate the antenna while watching the cam and microswitch S612 (see figure 7—30.)

Note

When the cam strikes the microswitch, deflection coil rotation should stop, with the roller of S612 resting on the cam. If the mechanism jitters as the cam strikes the microswitch, reverse the antenna rotation. L601 rotation should then stop when the cam strikes S612 roller from the opposite direction.

(*e*) Stop the antenna rotation when the deflection coil mechanism locks up with the cam in contact with the S612 roller.

(*f*) Inspect the position of the cam in relation to the roller of S612.

(*g*) If the roller is resting on the center of the cam, no adjustment is necessary and the equipment can be returned to normal operating condition with the jumper on E753 removed.

(*h*) To adjust the cam position, first loosen the four body clamp screws of synchro B602 (see figure 7—27), and then slowly rotate the body of B602 so that the S612 roller is in the center of the cam.

(*i*) Tighten the four body clamp screws of B602.

(*j*) Remove the jumper on E753.

(*k*) Rotate the antenna, and after one or two revolutions, observe the sweep rotation on the PPI-scope as the L601 cam operates microswitch S612.

(*l*) Reverse the antenna rotation and observe the PPI sweep rotation.

(*m*) If, with either direction of rotation, the sweep jitters as S612 is being operated, alignment of the antenna synchro is necessary (see paragraph 10.*c*. of this section).

(*n*) Replace the deflection coil assembly cover and return the equipment to normal operating condition.

(19 ALTERNATE) SYNCHRO ALIGNMENT CHECK AND ADJUSTMENT (FIELD)

The following method is suggested in the field where limited test equipment and tools are available.

(*a*) Open the indicator unit and remove the cover from antenna base synchro and antenna drive-motor housing. Energize the equipment and wait 5 minutes for the time-delay relays to operate.

(*b*) Press the RADIATE ON button and observe the sweep on the PPI scope. Now adjust the ANTENNA ROTATE control to permit the antenna to rotate at a speed of about 1° per second or as slowly as possible.

(*c*) Place a voltmeter across the contacts of S612 (24 volts dc). Observing the position of the sweep on the PPI, adjust the position of S612 by moving its slotted mounting plate so that the switch S612 is actuated for an interval of 8°.

(*d*) In the antenna base place the voltmeter between terminals 8A9 and ground.

(*e*) Disconnect the lead between S612 and tie point Y.

(*f*) Simultaneously observe the sweep on the PPI and the reading on the voltmeter, and adjust the cam in the antenna base that actuates S756 so that this switch is activated over an arc of 10 to 12°.

(*g*) Reconnect the lead between S612 and tie point Y, and remove voltmeter.

(*h*) In the azimuth and range indicator unit locate the microswitch S612. Put jumper lead across this switch.

(*i*) In the antenna base gear box locate terminal board E752 and put a jumper lead across terminals 8A8 and 8A9. All these connections are in the 24-volt d-c circuit. As a result of making these connections, the relay K704 is energized. When this occurs, the synchro in the indicator will be energized with zeroing voltage supplied by the transformer T702.

(*j*) Loosen the housing of the synchro B602 in the indicator.

(*k*) Rotate the synchro so that the roller that

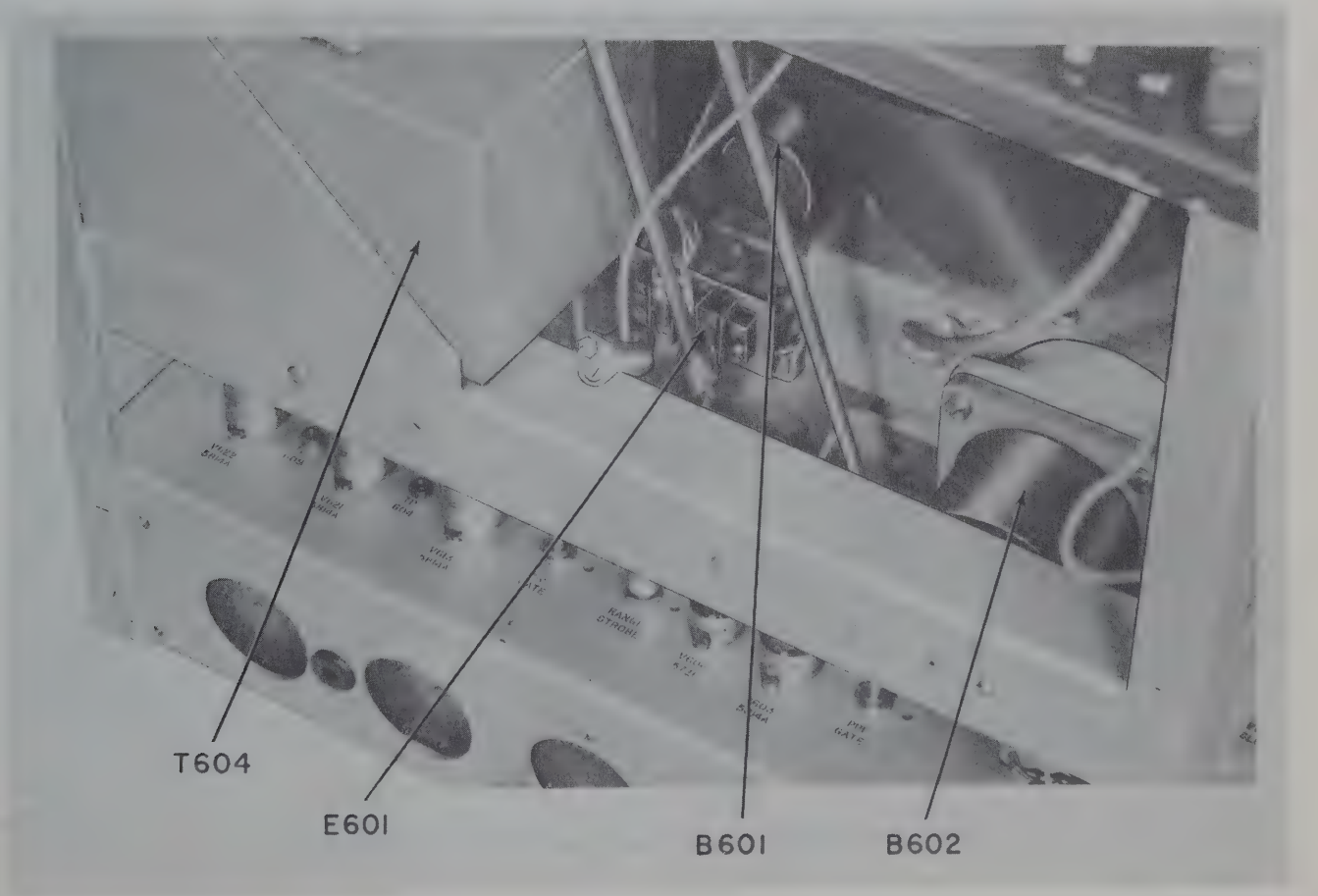

Figure 7–31. Indicator Component Locations (Bottom Mid-frame)

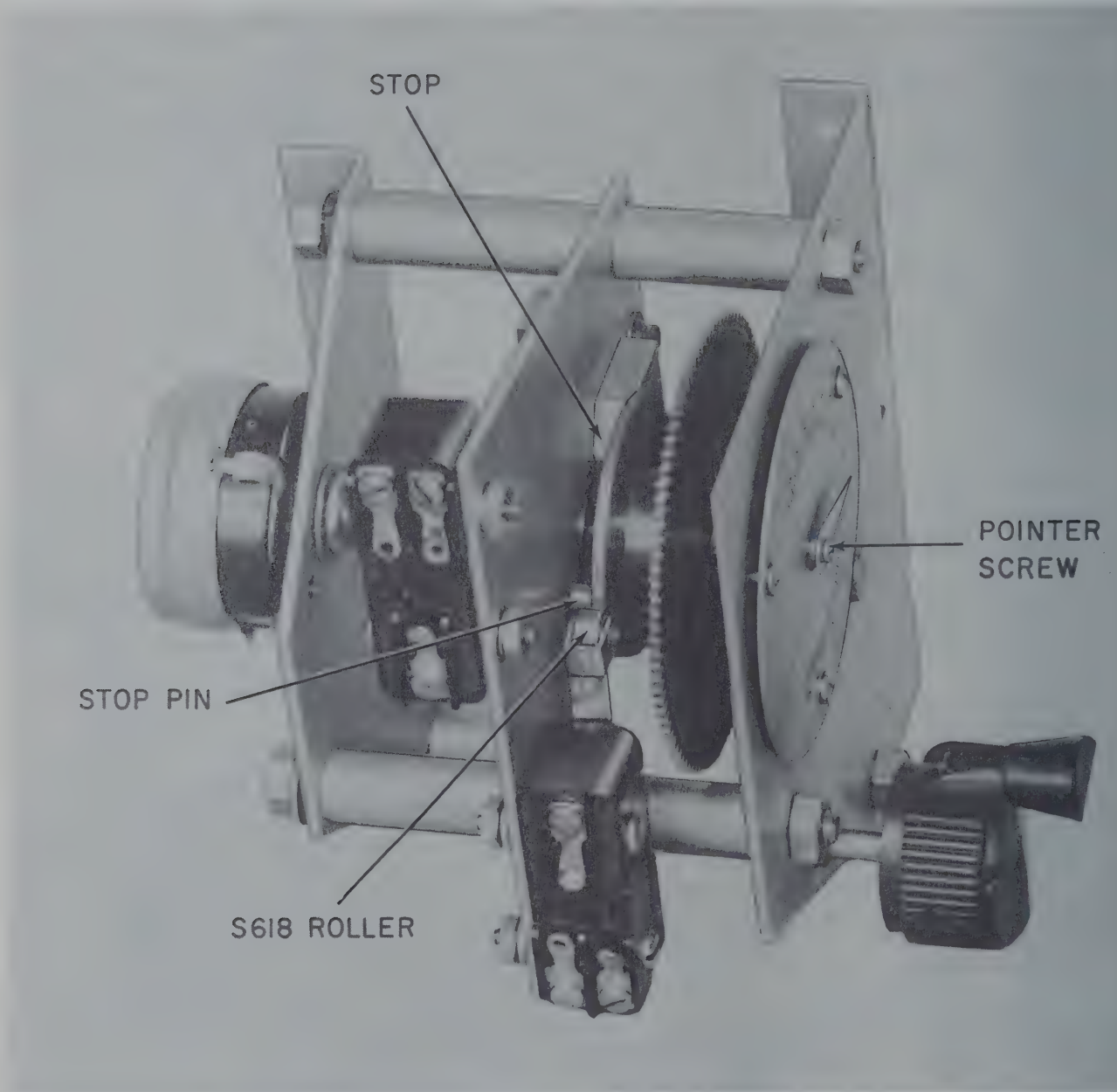

Figure 7—32. Antenna Rotation Control Mechanism (Front)

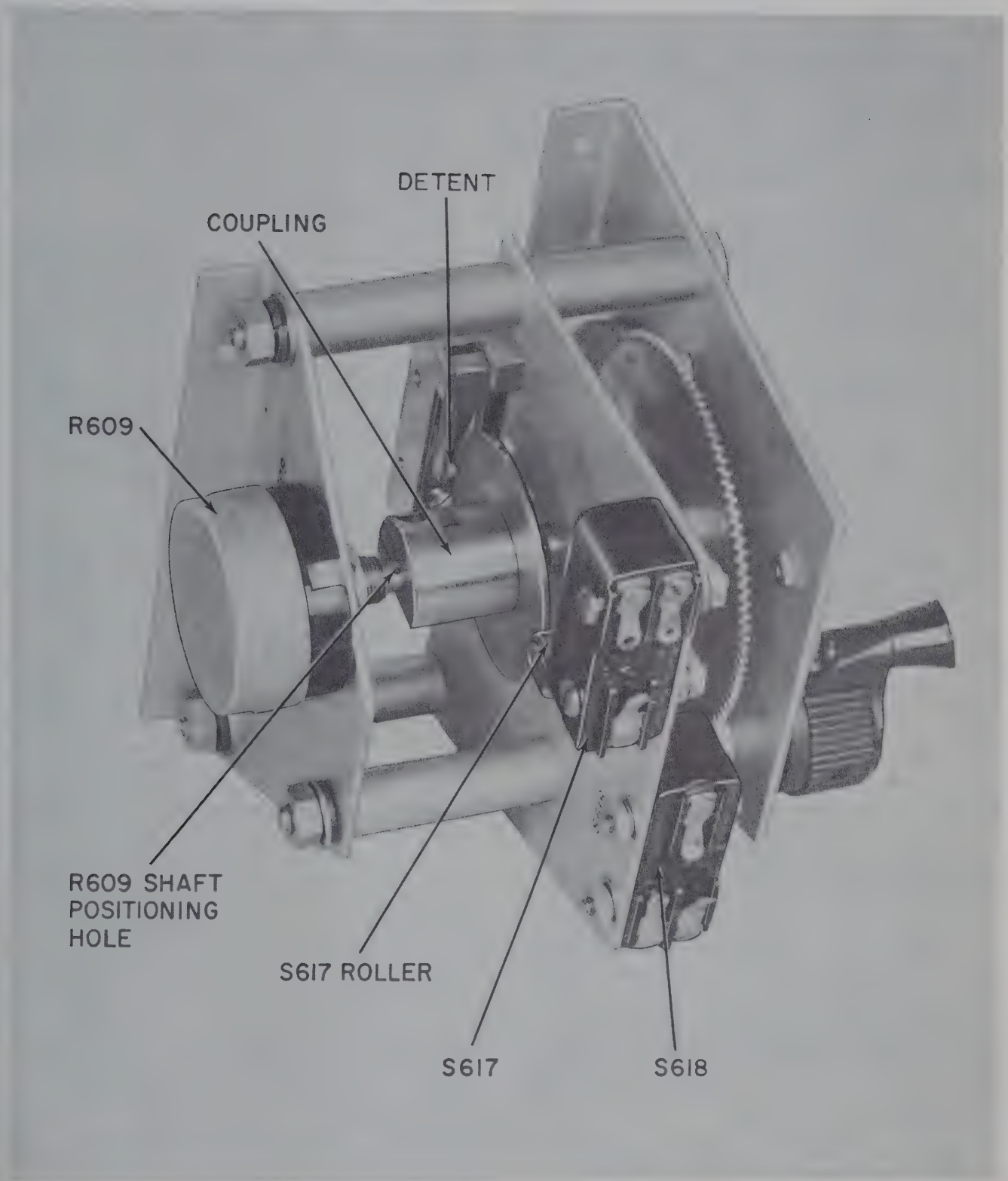

Figure 7—33. Antenna Rotation Control Mechanism (Rear)

actuates the switch S612 is in the middle of the cam.

(*l*) Clamp the housing of B602 and remove the jumpers.

(*m*) Disconnect the lead between S612 and tie point Y. This interrupts the 24-volt control circuit, de-energizing K704 and tying synchro B602 in the indicator directly to the synchro in the antenna base.

(*n*) Loosen the housing of synchro B752 in the antenna base.

(*o*) Rotate synchro B752 to position the indicator synchro B602 in the middle of the cam that actuates S612.

(20) ANTENNA ROTATE CONTROL (R609) MECHANISM ALIGNMENT.
(See figures 7–32 and 7–33.)

The arrangement of parts is clearly shown in the referenced illustrations; and no difficulty should be experienced in the replacement of the electrical parts (S617, S618, and S609). However, there is a definite relationship in the operation of the electrical and mechanical parts of the assembly. The relationship is as follows:

The dial pointer should be secured on its shaft so that the stop limits the pointer at 15, both in the CW and CCW directions.

When the mechanism is positioned at the detent (mid-position), the dial pointer should be at O.

At the O position, the rollers of both S617 and S618 should be at the operating points of their respective cams.

At the O position, the arm of R609 should be at its mid-point tap position.

If parts are replaced or adjustment appears to be necessary, use the above outline for checking the assembly.

The adjusting procedure is as follows:

(*a*) With the S618 cam locked on its shaft, adjust the position of the pointer so that it is at 15 for both CW and CCW positions.

(*b*) Adjust the position of the block so that pointer is at O when the roller is in the detent.

(*c*) At the O position, adjust the position of S618 so that its roller is engaged by the cam.

(*d*) Adjust the position of the S617 cam on its shaft so that the roller of S617 is engaged when at the O position (adjust the position of S617 if necessary).

(*e*) With the mechanism at the O position, adjust the position of the R609 shaft so that the resistance between the arm (center terminal) and the tap of R609 is zero.

Note

Use the hole in the S609 shaft for positioning. Use the ohmmeter on its X1 scale for determining the zero ohms point.

(*f*) Make sure that all setscrews and mounting screws are tight.

7. SIGNAL COMPARATOR CM-36A/TPS-1D.

a. TROUBLE-SHOOTING.

As the signal comparator consists of eight separate sections (five being subassemblies), each with a definite function, it should be possible to segregate a fault without too much difficulty. As a reference the eight sections are listed as follows:

60-Mc IF amplifier (subassembly)
Coho (coherent oscillator) (subassembly)
MTI repetition rate trigger amplifier (main chassis)
Delay amplifier (subassembly)
Non-delay amplifier (subassembly)
Delay network (subassembly)
Balancer and amplifier (main chassis)
Gate generator (main chassis)

When normal radar reception is in use, only the 60-Mc IF amplifier and part of the balancer and amplifier circuits are involved. When gated MTI is in use, these sections plus the remaining sections are involved.

It follows that if trouble is encountered on both MTI and normal radar operation, there is a good likelihood of the trouble being in the 60-Mc amplifier, in the balancer and amplifier, or in the power supply for these sections. If the trouble is present only on MTI, the remaining sections then should be investigated.

The test meter of the unit provides a check of the output levels of the 60-Mc IF amplifier, coho, repetition rate trigger amplifier (DELAY LINE INPUT position), non-delay amplifier, and delay amplifier. Therefore, measurements taken of these circuits, by the use of the test meter and TEST SELECTOR switch, provide an indication of possible fault in a particular section.

The delay network can be checked for maximum attenuation by substituting the test attenuator (mounted on fuse clips above the unit chassis) for the netwwork. The test procedure is given under paragraph 7.*c.*(1) below. In taking the measurements mentioned in the preceding paragraph, the network is checked for passage of signals by the DELAY LINE INPUT and NON-DELAY AMPL OUT positions of the TEST SELECTOR switch. Although the output of the delay network is checked at the delay amplifier output, the delay amplifier can be eliminated when the check is made with the test attenuator. Of course, no signals with either the test attenuator or the delay network in the circuit would indicate a fault in the delay amplifier.

Another indication of possible trouble in the delay network is a check of triggers developed by the repetition rate trigger amplifier. If a fault exists in the delay network, the output triggers may be affected because the network is part of the trigger generating circuit as well as part of the signal delay circuit. The triggers can be checked by Oscilloscope TS-34A/AP at J302, provided that a 75-ohm resistor is connected across the test leads. In this instance the TS-34A/AP is used as a synchroscope, with the TS-34A/AP SWEEP SPEED control set at START-STOP. The waveform is shown in the servicing block diagram (figure 7–107).

After a defect is localized to a particular section of the unit, tube voltage and circuit checks should reveal

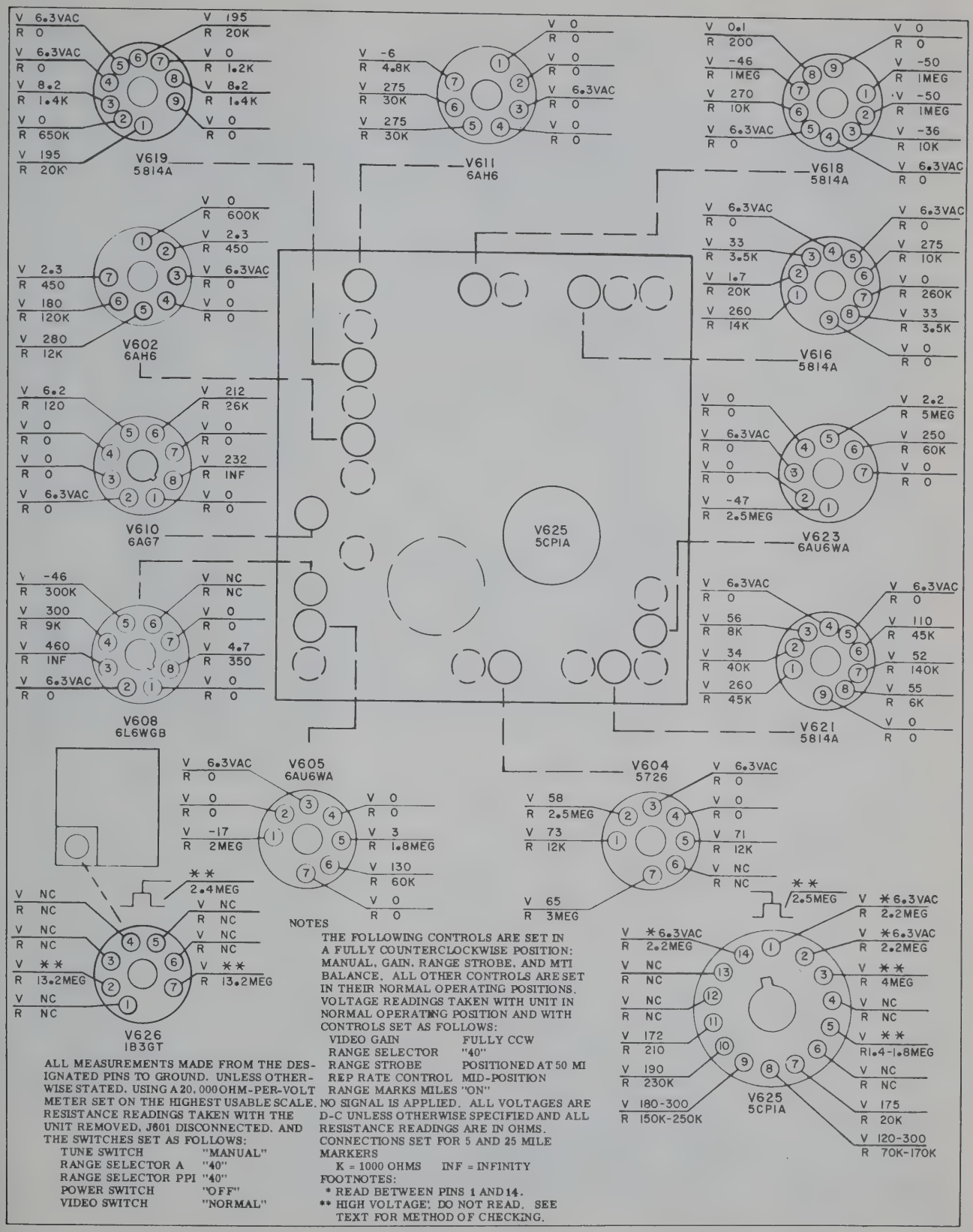
V619 5814A
V611 6AH6
V618 5814A
V602 6AH6
V616 5814A
V625 5CPIA
V610 6AG7
V623 6AU6WA
V608 6L6WGB
V621 5814A
V605 6AU6WA
V604 5726
V626 1B3GT
V625 5CPIA
NOTES
THE FOLLOWING CONTROLS ARE SET IN A FULLY COUNTERCLOCKWISE POSITION: MANUAL, GAIN, RANGE STROBE, AND MTI BALANCE. ALL OTHER CONTROLS ARE SET IN THEIR NORMAL OPERATING POSITIONS. VOLTAGE READINGS TAKEN WITH UNIT IN NORMAL OPERATING POSITION AND WITH CONTROLS SET AS FOLLOWS:
VIDEO GAIN FULLY CCW
RANGE SELECTOR "40"
RANGE STROBE POSITIONED AT 50 MI
REP RATE CONTROL MID-POSITION
RANGE MARKS MILES "ON"
NO SIGNAL IS APPLIED. ALL VOLTAGES ARE D-C UNLESS OTHERWISE SPECIFIED AND ALL RESISTANCE READINGS ARE IN OHMS. CONNECTIONS SET FOR 5 AND 25 MILE MARKERS
K = 1000 OHMS INF = INFINITY
FOOTNOTES:
* READ BETWEEN PINS 1 AND 14.
** HIGH VOLTAGE; DO NOT READ. SEE TEXT FOR METHOD OF CHECKING.
ALL MEASUREMENTS MADE FROM THE DESIGNATED PINS TO GROUND. UNLESS OTHERWISE STATED, USING A 20,000 OHM-PER-VOLT METER SET ON THE HIGHEST USABLE SCALE. RESISTANCE READINGS TAKEN WITH THE UNIT REMOVED, J601 DISCONNECTED, AND THE SWITCHES SET AS FOLLOWS:
TUNE SWITCH "MANUAL"
RANGE SELECTOR A "40"
RANGE SELECTOR PPI "40"
POWER SWITCH "OFF"
VIDEO SWITCH "NORMAL"

Figure 7—34. Indicator Voltage and Resistance Measurements

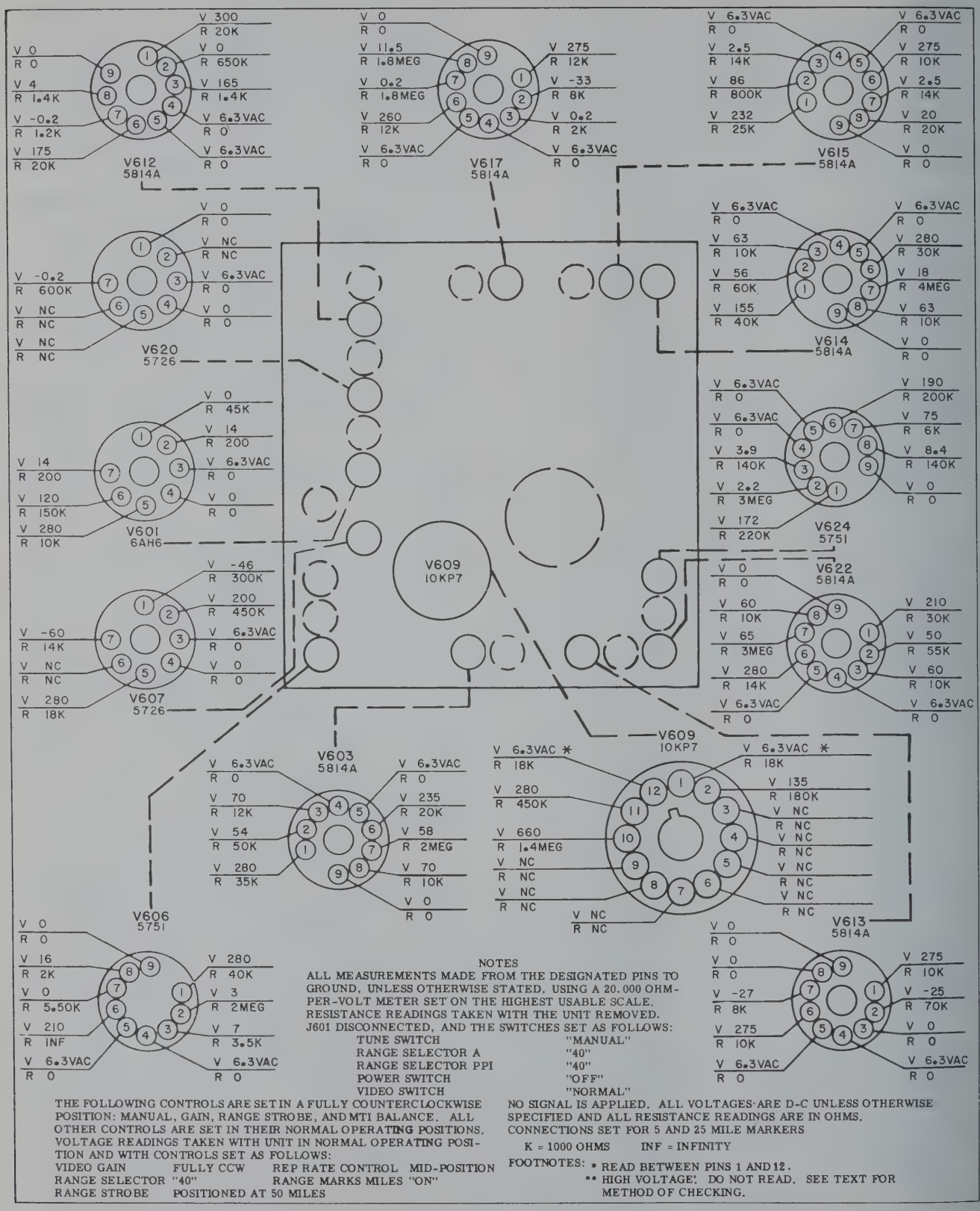
V612 5814A
V617 5814A
V615 5814A
V620 5726
V614 5814A
V601 6AH6
V624 5751
V609 10KP7
V607 5726
V622 5814A
V603 5814A
V609 10KP7
V606 5751
V613 5814A
NOTES
ALL MEASUREMENTS MADE FROM THE DESIGNATED PINS TO GROUND, UNLESS OTHERWISE STATED, USING A 20,000 OHM-PER-VOLT METER SET ON THE HIGHEST USABLE SCALE. RESISTANCE READINGS TAKEN WITH THE UNIT REMOVED.
J601 DISCONNECTED, AND THE SWITCHES SET AS FOLLOWS:
TUNE SWITCH "MANUAL"
RANGE SELECTOR A "40"
RANGE SELECTOR PPI "40"
POWER SWITCH "OFF"
VIDEO SWITCH "NORMAL"
THE FOLLOWING CONTROLS ARE SET IN A FULLY COUNTERCLOCKWISE POSITION: MANUAL, GAIN, RANGE STROBE, AND MTI BALANCE. ALL OTHER CONTROLS ARE SET IN THEIR NORMAL OPERATING POSITIONS. VOLTAGE READINGS TAKEN WITH UNIT IN NORMAL OPERATING POSITION AND WITH CONTROLS SET AS FOLLOWS:
VIDEO GAIN FULLY CCW
RANGE SELECTOR "40"
RANGE STROBE POSITIONED AT 50 MILES
REP RATE CONTROL MID-POSITION
RANGE MARKS MILES "ON"
NO SIGNAL IS APPLIED. ALL VOLTAGES ARE D-C UNLESS OTHERWISE SPECIFIED AND ALL RESISTANCE READINGS ARE IN OHMS. CONNECTIONS SET FOR 5 AND 25 MILE MARKERS
K = 1000 OHMS INF = INFINITY
FOOTNOTES: * READ BETWEEN PINS 1 AND 12.
** HIGH VOLTAGE! DO NOT READ. SEE TEXT FOR METHOD OF CHECKING.

Figure 7—35. Indicator Voltage and Resistance Measurements

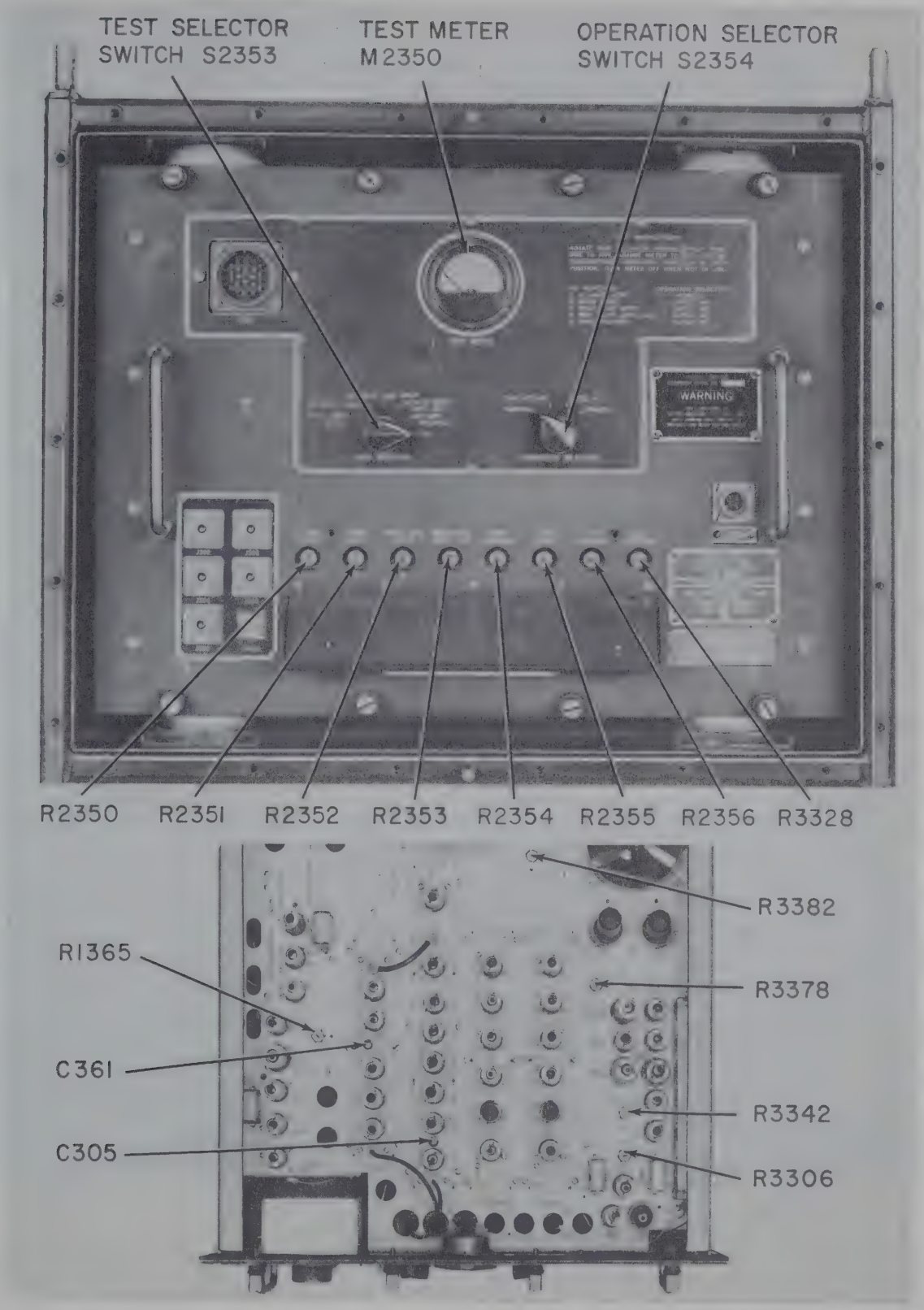

Figure 7—36. Signal Comparator Adjustments

the source of trouble. Actually, a major portion of the signal comparator circuits are straight-forward. For example, the 60-MC IF amplifier and also the delay and non-delay amplifier circuits are standard arrangements found in most broad-band IF amplifiers.

Perhaps the most important factor in servicing the signal comparator is a good knowledge of the functioning of all circuits. A thorough study of the theory of signal comparator operation given in Section 2 is recommended.

Voltage and resistance measurements for the signal comparator are given in figures 7–43 through 7–47. Component locations are found in figures 7–48 through 7–55. A schematic diagram is shown in figure 7–113.

b. CHECKS AND ADJUSTMENTS.

(1) GENERAL.

The adjustment procedure for the following controls is given in Section 4, paragraph 3.*c.*

IF Amplifier Level R2350
Coho Level R2351
Delay Line Input R2352
Non-Delay Amplifier Output R2353
Amplitude Balance R2354
MTI Video Gain R3306
C305 (60-mc IF amplifier input tuning)
C361 (coho tuning)
Coho Sync R2355
MTI Balance R2356
Gate Balance R3328

See Table 4–1 for functions of these controls.

The adjustment procedure for the following controls is given in Section 3, paragraph 6.*c.*

Video Limit Adjust R3342
MTI Gate Calibration R3382
MTI Gate Mark R3378

All normal settings are approximately at mid-position. Should it become necessary to position a control near either limit of its range or should it be impossible to obtain a proper adjustment with any setting, first check the particular circuit in which the control is used. R2350–R2353, R2355, and R3306 control the gain of the amplifiers, and therefore, a near-maximum setting could indicate a faulty tube in that particular amplifier.

(2) CARRIER GATE LENGTH R1365 ADJUSTMENT. *(See figure 7–36.)*

This control adjusts the length of the gate which starts and stops the 9-Mc oscillator for each receiving period, the leading edge of the gate also being the signal which initiates triggers for the modulator.

If the length of the gate is greater than 2500 microseconds, the repetition rate will be counted down 2:1 or 200 pps. Also, it will be impossible to obtain MTI. If the gate length is much shorter than 2000 microseconds, long-range targets will be gated off. To check the gate and adjust R1365 by means of a scope, see paragraph 7.*b.*(3), below.

To adjust R1365, proceed as follows:

(*a*) Adjust the panel screwdriver controls for

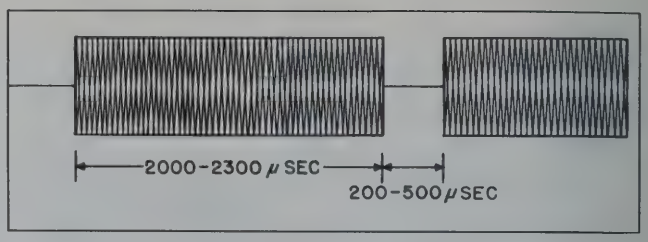

Figure 7–37. Carrier Gate Measurement

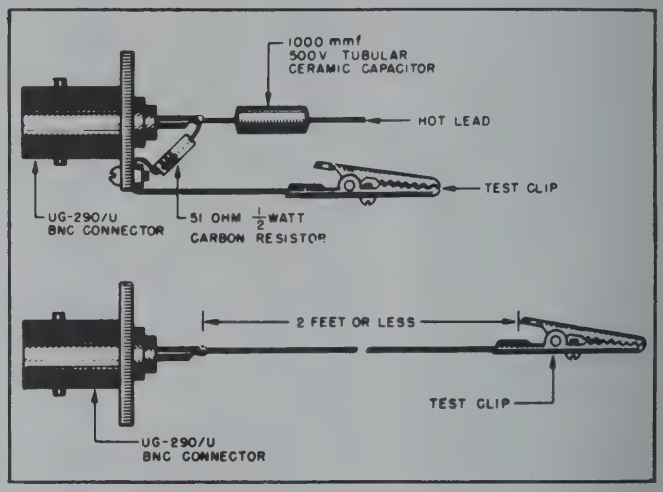

Figure 7–38. Special Adapter and Test Lead

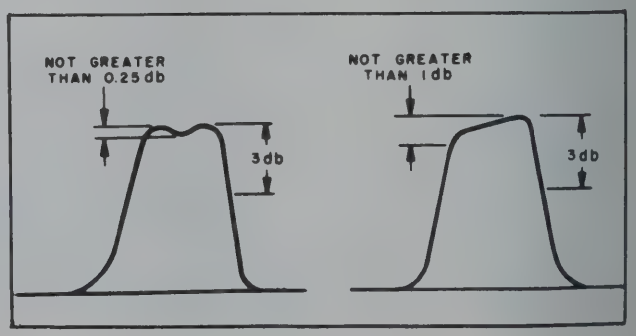

Figure 7–39. Alignment Patterns for 9- and 60-mc Amplifiers

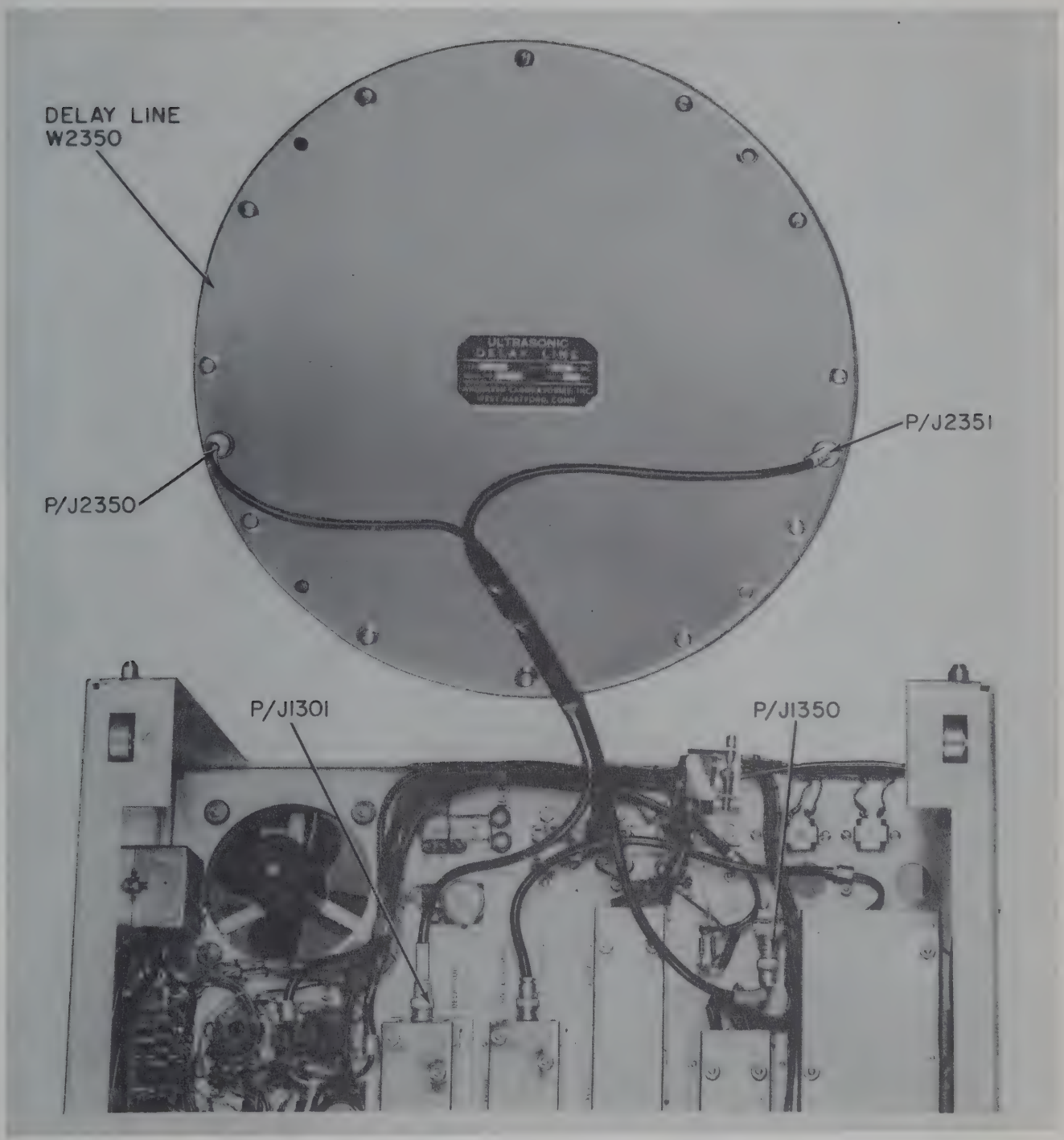

Figure 7—40. Delay Network Connections

red-line readings as given on the instruction plate on the panel of the signal comparator.

(*b*) Set the OPERATION SELECTOR switch (signal comparator) to GATED MTI.

(*c*) Set the A-scope RANGE switch to 160.

(*d*) Make certain that grass can be plainly seen on the A-scope trace. (Advance the A-scope VIDEO GAIN control if necessary.)

(*e*) Unlock and turn R1365 counterclockwise until the elimination of grass on the right end of the A-scope trace is noted.

(*f*) Turn R1365 slowly clockwise until the reappearing grass covers the full length of the A-scope trace.

(*g*) Turn R1365 slightly more clockwise (no more than 10°).

Note

As pointed out above, the MTI is inoperative if the gate is set for too long a period. This condition occurs when R1365 is turned too far clockwise.

If R1365 cannot be adjusted as indicated, check V1353, V1354, and V1355, and their circuit voltages and resistances. If these tubes and circuits show no fault, check the remaining tubes and circuits of the MTI repetition rate trigger amplifier.

(3) OSCILLOSCOPE CHECK AND ADJUSTMENT OF CARRIER GATE R1365.

The gate is measured in the output circuit of V1357 (2nd 9-Mc amplifier) and therefore consists of a square-wave-modulated 9-Mc signal. If a scope other than Oscilloscope TS-239/AP is used, it should have a good response at 5 Mc. The −3-db point of the TS-239/AP is at 5 Mc, and at 9 Mc the response is down 8 db.

Test equipment required:
Oscilloscope TS-239/AP
A/R Scope or equivalent

(*a*) Pull the signal comparator chassis out as far as the chassis stops.

(*b*) On the signal comparator panel, disconnect P302 from J302, and connect a TS-239/AP patch cord from J302 (type AN jack) to the EXTERNAL SYNC jack on the TS-239/AP.

(*c*) Connect a TS-239/AP probe from one of the TS-239/AP SIGNAL INPUT jacks to the center conductor at the rear of J1350 (hot lead) and ground.

(*d*) Set the TS-239/AP as follows:

CONTROL	SETTING
SWEEP DELAY	IN
SYNC SELECTOR	HI EXT
SWEEP TIME	10,000 microseconds
MULTIPLIER	300

(*e*) Connect the TS-239/AP power cord to power receptacle J409 on the power supply unit.

(*f*) Warm up the equipment for at least 30 minutes without radiation.

(*g*) On the signal comparator, set the controls (figure 7–36) listed below as follows: (Controls not listed may be in any random positions.)

CONTROL	SETTING
IF AMPL. LEVEL	Fully counterclockwise
DELAY LINE INPUT	Adjust for red-line reading
OPERATION SELECTOR	NORMAL

(*h*) On the TS-239/AP, adjust the vertical amplifier multiplier and gain for the desired signal amplitude.

(*i*) On the TS-239/AP, adjust the sweep delay, fine sweep, and horizontal gain so that the pattern appears as shown in figure 7–37.

(*j*) Measure the timing of the pattern with the 100 and 500 markers of the TS-239/AP. The timing should be as that shown in figure 7–37.

(*k*) If the "off" interval is less than the 200 microseconds or greater than 500 microseconds, adjust carrier gate length control R1365 (signal comparator) as required.

Note

The length of a complete pattern is approximately 2500 microseconds and, being controlled by the quartz delay network, (W2350), is not adjustable.

(*l*) Lock the control, remove the test equipment, and return the radar to normal operating condition.

(4) MTI REPETITION RATE TRIGGER AMPLIFIER BANDWIDTH CHECK.

This procedure checks the bandwidth of the 9-Mc amplifier portion of the MTI repetition rate trigger amplifier section of the unit. The measurement includes the circuits of V1355, V1356, and V1357.

Test equipment required:
Signal Generator TS-452/U
Special adapter (see figure 7–38)

The procedure is as follows:

(*a*) With the signal comparator chassis pulled out to its chassis stops, remove V1354, ground pin 7 of V1355, and remove P2301 (non-delay amplifier input connector).

(*b*) Connect the output cable of the TS-452/U through the special adapter to pin 1 of V1355 (hot lead to pin 1).

(*c*) Connect the TS-452/U traveling detector probe to the junction of R1385–R1380 and ground (hot lead to the junction; other end of probe lead to the TS-452/U vertical amplifier input).

(*d*) On the TS-452/U, install the 5–11-Mc oscillator coil, cut in all of the attenuation, and plug the power cable into J409 of the power supply unit.

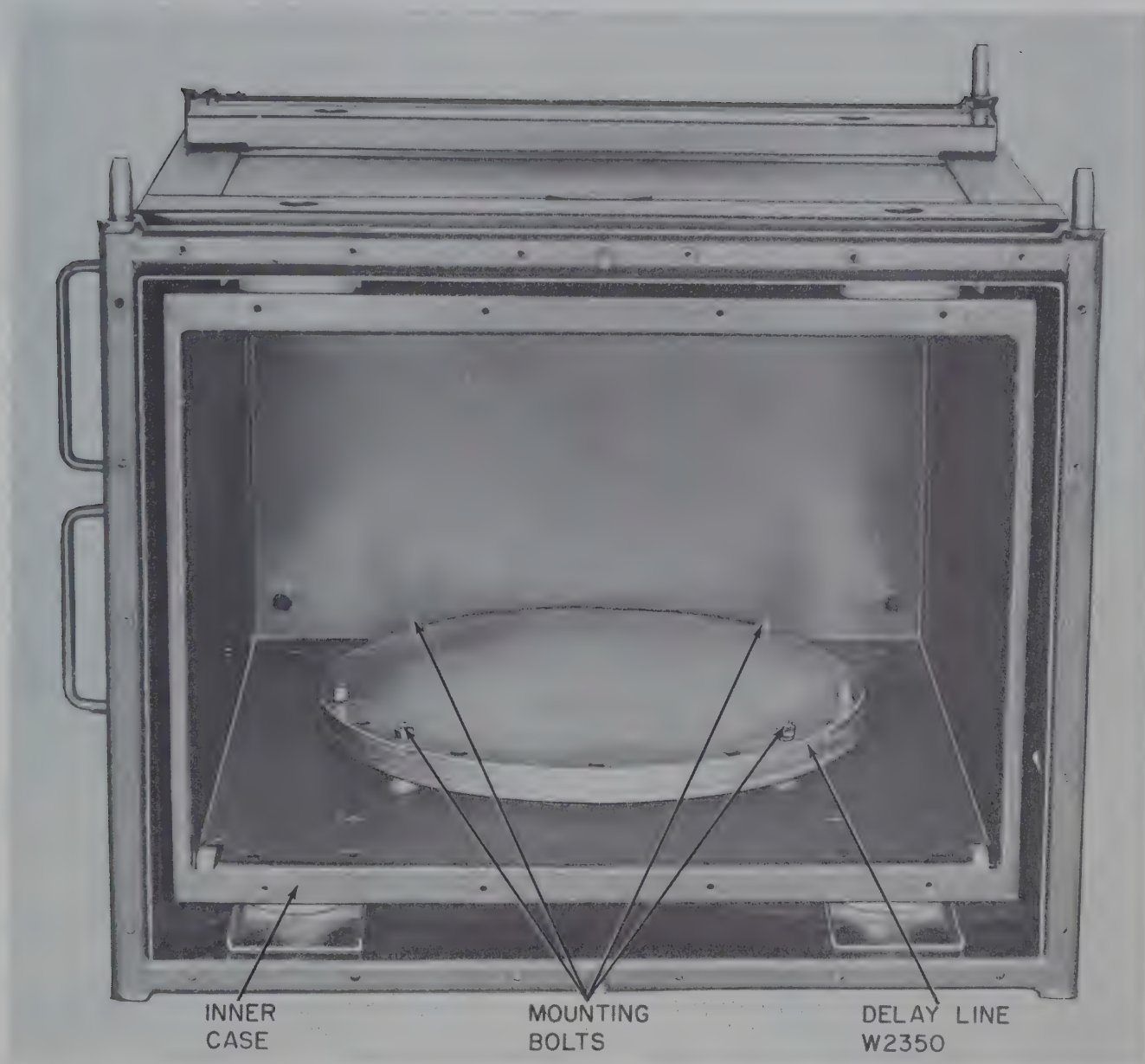

Figure 7—41. Delay Network Case Details

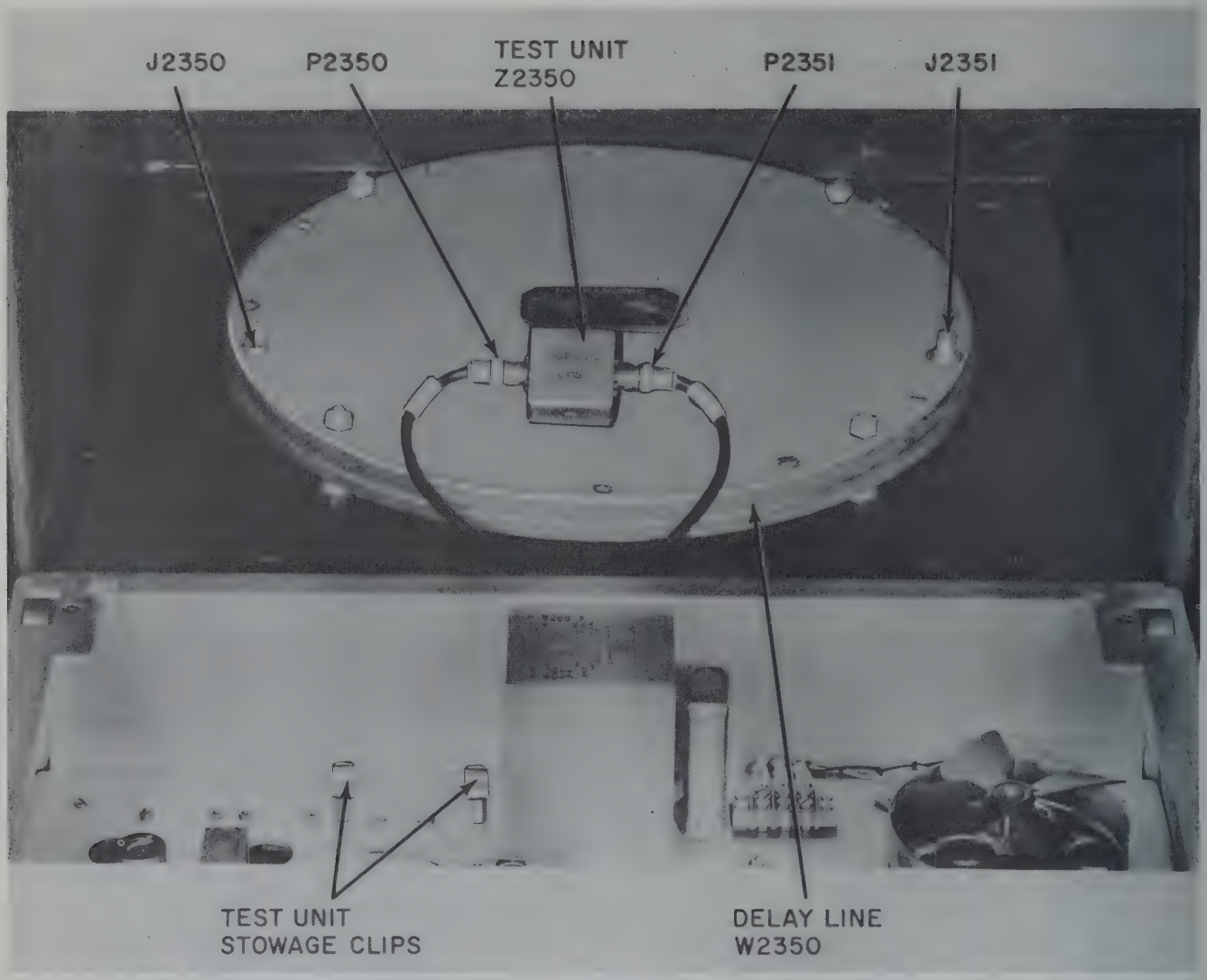

Figure 7—42. Delay Network Test Attenuator Connections

(*e*) Warm up the equipment for 10 to 15 minutes with radiation off.

(*f*) Adjust the TS-452/U vertical amplifier gain control at 1/2 to 3/4 of full gain.

(*g*) Cut out steps of the attenuator until the pattern is approximately one half of the diameter of the scope.

(*h*) Adjust the TS-452/U controls so that the pattern nearly fills the face of the scope.

(*i*) Temporarily cut in 3 db more of the attenuation, and mark the scope for the -3-db point.

(*j*) Measure, with the TS-452/U wavemeter marker, the center frequency and bandwidth of the pattern, which should be round-topped like that shown in figure 7—39. The measurements should be:

Center frequency	9 ± 0.3 Mc
Bandwidth	1.9 ± 0.25 Mc

(*k*) Measure the gain of the amplifier by first removing the traveling detector probe from the junction of R1380 and R1385.

(*l*) Connect the traveling detector probe to pin 5 of V1357, and adjust the TS-452/U attenuator for a pattern of 1/2 the diameter of the scope.

(*m*) Log the height of the pattern (by marks on the edge of a slip of paper), and also log the amount of attenuation in the circuit.

(*n*) Disconnect the probe from pin 5 of V1357, and also disconnect the output cable with adapter from pin 1 of V1355.

(*o*) Connect the probe to the adapter.

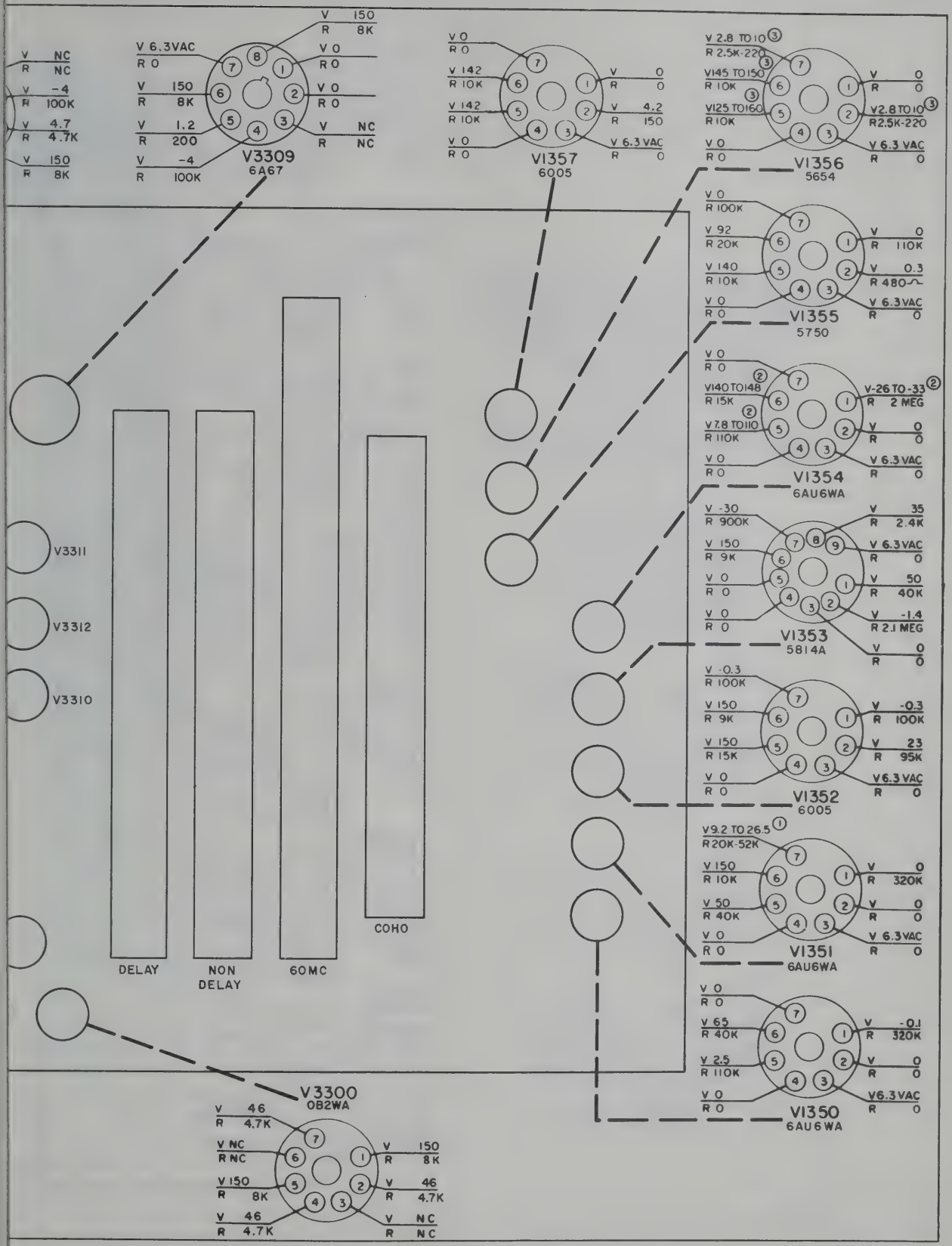

Figure 7—43. Signal Comparator Voltage and Resistance Measurements (Main Chassis)

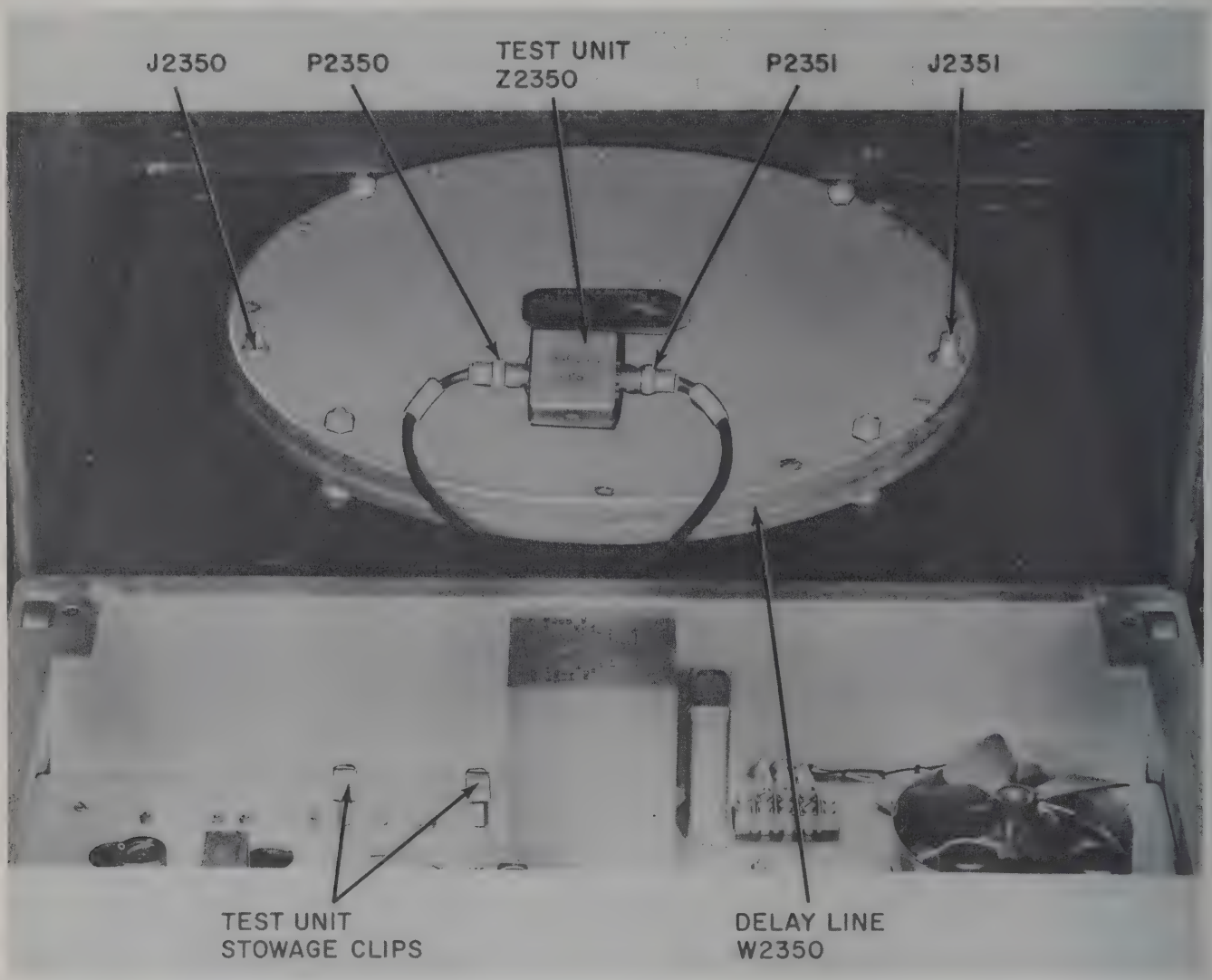

Figure 7—42. Delay Network Test Attenuator Connections

(*e*) Warm up the equipment for 10 to 15 minutes with radiation off.

(*f*) Adjust the TS-452/U vertical amplifier gain control at 1/2 to 3/4 of full gain.

(*g*) Cut out steps of the attenuator until the pattern is approximately one half of the diameter of the scope.

(*h*) Adjust the TS-452/U controls so that the pattern nearly fills the face of the scope.

(*i*) Temporarily cut in 3 db more of the attenuation, and mark the scope for the -3-db point.

(*j*) Measure, with the TS-452/U wavemeter marker, the center frequency and bandwidth of the pattern, which should be round-topped like that shown in figure 7—39. The measurements should be:

Center frequency	9 ± 0.3 Mc
Bandwidth	1.9 ± 0.25 Mc

(*k*) Measure the gain of the amplifier by first removing the traveling detector probe from the junction of R1380 and R1385.

(*l*) Connect the traveling detector probe to pin 5 of V1357, and adjust the TS-452/U attenuator for a pattern of 1/2 the diameter of the scope.

(*m*) Log the height of the pattern (by marks on the edge of a slip of paper), and also log the amount of attenuation in the circuit.

(*n*) Disconnect the probe from pin 5 of V1357, and also disconnect the output cable with adapter from pin 1 of V1355.

(*o*) Connect the probe to the adapter.

NOTES:

ALL MEASUREMENTS MADE FROM THE DESIGNATED PINS TO GROUND, UNLESS OTHERWISE STATED. USING A 20,000 OHMS-PER-VOLT METER SET ON THE HIGHEST USABLE SCALE. TERMINALS DESIGNATED BY LETTERS ARE LOCATED ON END OF ASSEMBLY

SWITCHES SET AS FOLLOWS:
OPERATION SELECTOR SWITCH S2354 (NORMAL)
TEST SELECTOR SWITCH S2353 "OFF"

INPUT AS FOLLOWS:
+150 VOLTS AT TERMINAL C
6.3 VOLTS AC AT TERMINAL F

ALL VOLTAGES ARE DC UNLESS OTHERWISE STATED RESISTANCE MEASUREMENTS MADE WITH UNIT DISCONNECTED. ALL RESISTANCE READINGS ARE IN OHMS. K = 1000 OHMS. INF = INFINITY.

SPECIAL NOTES

1 VARIES WITH SETTING OF R2356
2 VARIES WITH SETTING OF R1365
3 VARIES WITH SETTING OF R2352
4 VARIES WITH SETTING OF R2354
5 VARIES WITH SETTING OF COHO ADJ AND MTI ADJ
6 VARIES WITH SETTING OF R3328
7 VARIES WITH SETTING OF MTI RANGE GATE (INDICATOR)
8 VARIES WITH SETTING OF R3378

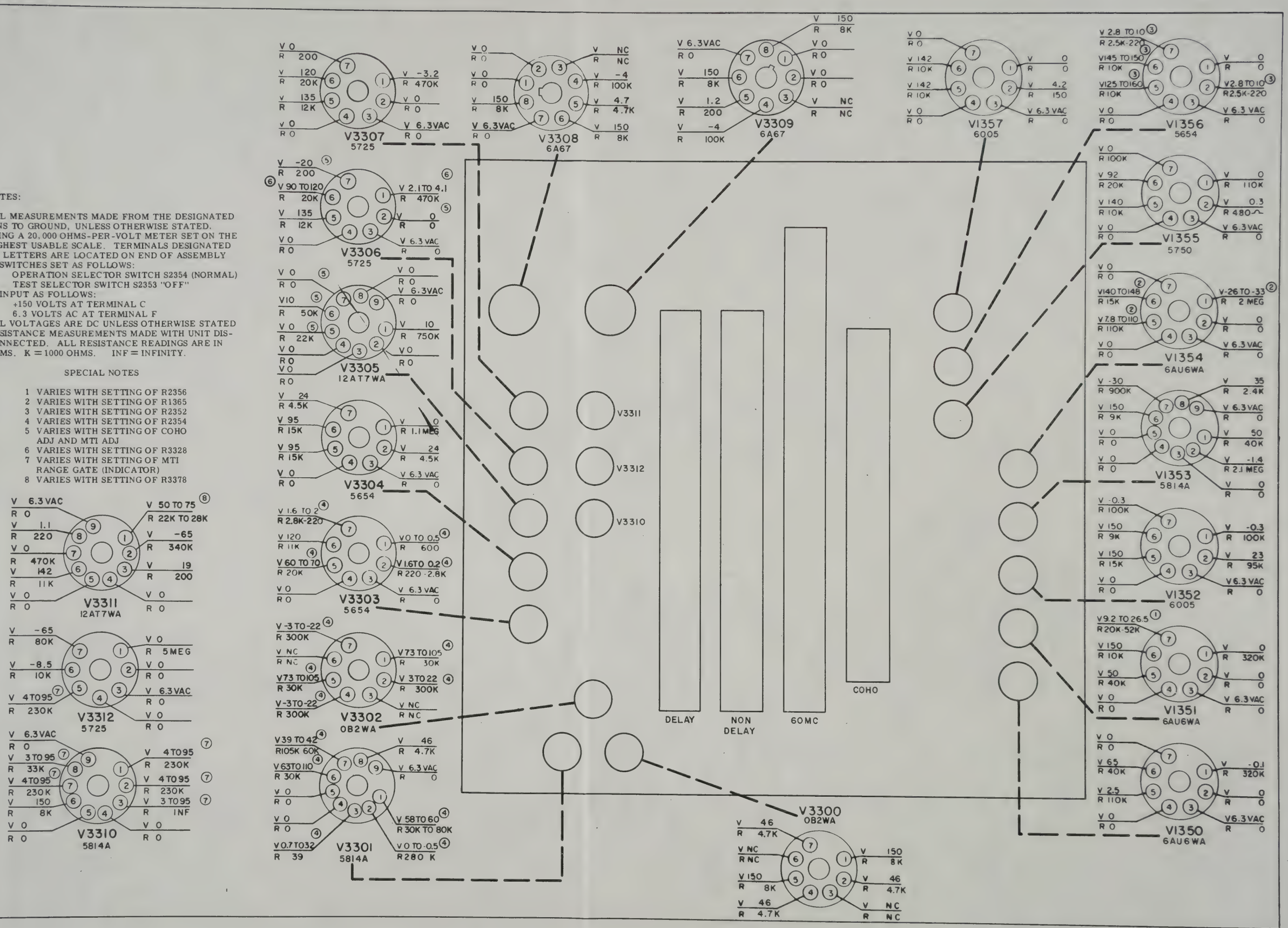

Figure 7—43. Signal Comparator Voltage and Resistance Measurements (Main Chassis)

(*p*) Cut in attenuation until the scope pattern is the same height as that recorded in step (*m*) above.

(*q*) Read the amount of attenuation in the circuit. The difference between this figure and the one recorded in step (*m*) is the db gain figure of the amplifier, and should be 19 ± 2 db.

(*r*) Shut down the radar, disconnect the test equipment, replace V1354, unground pin 7 of V1355, and otherwise return the radar to normal operating condition.

(5) CHECKING 9- AND 60-MC AMPLIFIERS.

(*a*) GENERAL.

These amplifiers are all fixed-tuned, the only exception being the input stage of the 60-Mc IF amplifier. The alignment of these amplifiers should hold over an indefinite period.

It is rather unlikely that the inductances of the tuned circuits will change value sufficiently to upset alignment. However, there is a possibility of a few coils, which are in plate circuits, changing value because of high current caused by a defect in the associated tube.

Other component failures could upset the bandpass of the amplifiers — for example, an open bypass capacitor. A change in the value of a plate load resistor also results in a change of bandpass characteristics.

Therefore, if trouble develops in an amplifier, make tube, voltage, and resistance checks first. If a defective component other than a tube is found, it is best to check the amplifier alignment after replacement, especially if it was necessary to disturb several components to effect repair. Due to the short lead lengths required, it is sometimes difficult to replace some components without causing unseen damage to an adjacent component.

The lead lengths and positions of certain components affect the characteristic of an amplifier to some degree. Therefore, it is best to make a general practice of using the same lead length and position as that of the defective component when making a replacement.

Most checks, including alignment checks, can be made on the amplifiers of the signal comparator with the chassis pulled out as far as the drawer stops. Be sure to disconnect the delay network if it necessary to pull the chassis out beyond the stops.

(*b*) CHECKING ALIGNMENT OF 60-MC IF AMPLIFIER.

To check the alignment of the 60-Mc IF amplifier, the following equipment is required:

Signal Generator TS-452/U or equivalent (includes sweep generator, wavemeter, and scope)

1 two-ft test lead with test clip on one end and type UG-260/U connector on other end (only center conductor of connector used).

1 special adapter (see figure 7—38)

The procedure for making an alignment check is as follows:

1. Pull the signal comparator out of its case as far as the chassis stops.

2. Connect the power cord of the TS-452/U to power receptacle J409 on the power supply unit.

3. Warm up the equipment for 10 to 15 minutes without radiation.

4. While the equipment is warming up, turn on the TS-452/U and make preliminary checks of the signal generator with the 45—100 Mc oscillator coil, as given in the TS-452/U instruction book.

5. On the top side of the signal comparator chassis, disconnect P307 from J307 at the input to the 60-Mc IF amplifier.

6. Cut in all of the RF attenuator of the TS-452/U (100 db).

7. Connect the output cable of the signal generator directly to J307 (no adapter required).

8. Connect the 2-ft test lead from the Vertical Input jack of the TS-452/U to terminal PM on the end of the 60-mc IF amplifier (underside of signal comparator chassis).

9. On the signal comparator panel, set the controls as follows:

TEST SELECTOR — OFF
OPERATION SELECTOR — NORMAL
IF AMPL LEVEL — fully clockwise
NON-DELAY AMPL OUTPUT — fully counterclockwise.

10. Adjust the horizontal amplifier gain of the TS-452/U so that the noise from the 60-Mc IF amplifier is just visible on the scope base-line (reduce the 60-Mc IF amplifier gain slightly if necessary).

11. Cut out steps of the RF attenuator (TS-452/U) until the scope pattern is about 1/2 the scope diameter, with the scope baseline adjusted about halfway between the center and bottom.

12. To make certain that the amplifier is not limiting, reduce the input twice in 3-db steps. The change in amplitude should be the same for both 3-db steps. If not, reduce the IF gain and increase the scope vertical amplifier gain as required.

13. Adjust the scope horizontal amplifier gain and centering to obtain the widest possible pattern.

14. Set the wavemeter marker of the TS-452/U scope at 60 Mc, and adjust C305 on the IF amplifier for maximum amplitude at the marker position.

15. Readjust as in steps *12.* and *13.* if necessary.

16. Check the scope pattern, which should be flat-topped. If the flat-topped portion has a slope, the slope should be no more than 1 db; and if dipped in the center, the dip should be no greater than 0.25 db (see figure 7—39).

Note

Measurements can be made, using the TS-452/U attenuator and a calibrated chart on the scope screen. See the TS-452/U instruction book for suggested method.

17. Check the over-all bandwidth at 3-db points by the use of the wavemeter marker and scope calibration as given in the TS-452/U instruction book. The bandwidth should be 1 ± 0.1 Mc.

18. Check the bandwidth of the 60-Mc IF amplifier at the input to the 2nd IF amplifier tube, V302, as follows:

19. Remove the signal generator output cable from J307 of the 60-Mc IF amplifier, and also remove the 1st IF amplifier tube, V301, from its socket.

20. Connect the signal generator output cable to the special adapter (figure 7—38), and insert the hot lead of the adapter into pin 5 of the V301 socket (XV301), grounding the adapter as close to pin 5 as possible.

21. Measure the bandwidth by the same procedure used for the entire amplifier (steps *10.* through *17.* above).

Note

The -3-db bandwidth should be 7.0 ± 1 Mc and centered within 0.2 Mc of 60 Mc. The bandpass characteristic should conform to the patterns of figure 7—39.

22. Disconnect the test equipment and replace V301.

(*c*) CHECKING 60-MC IF AMPLIFIER GAIN.

Test equipment required: same as for paragraph (*b*) above.

1. Set up the test equipment as for checking alignment; see paragraph (*b*), steps *1.* through *8.*

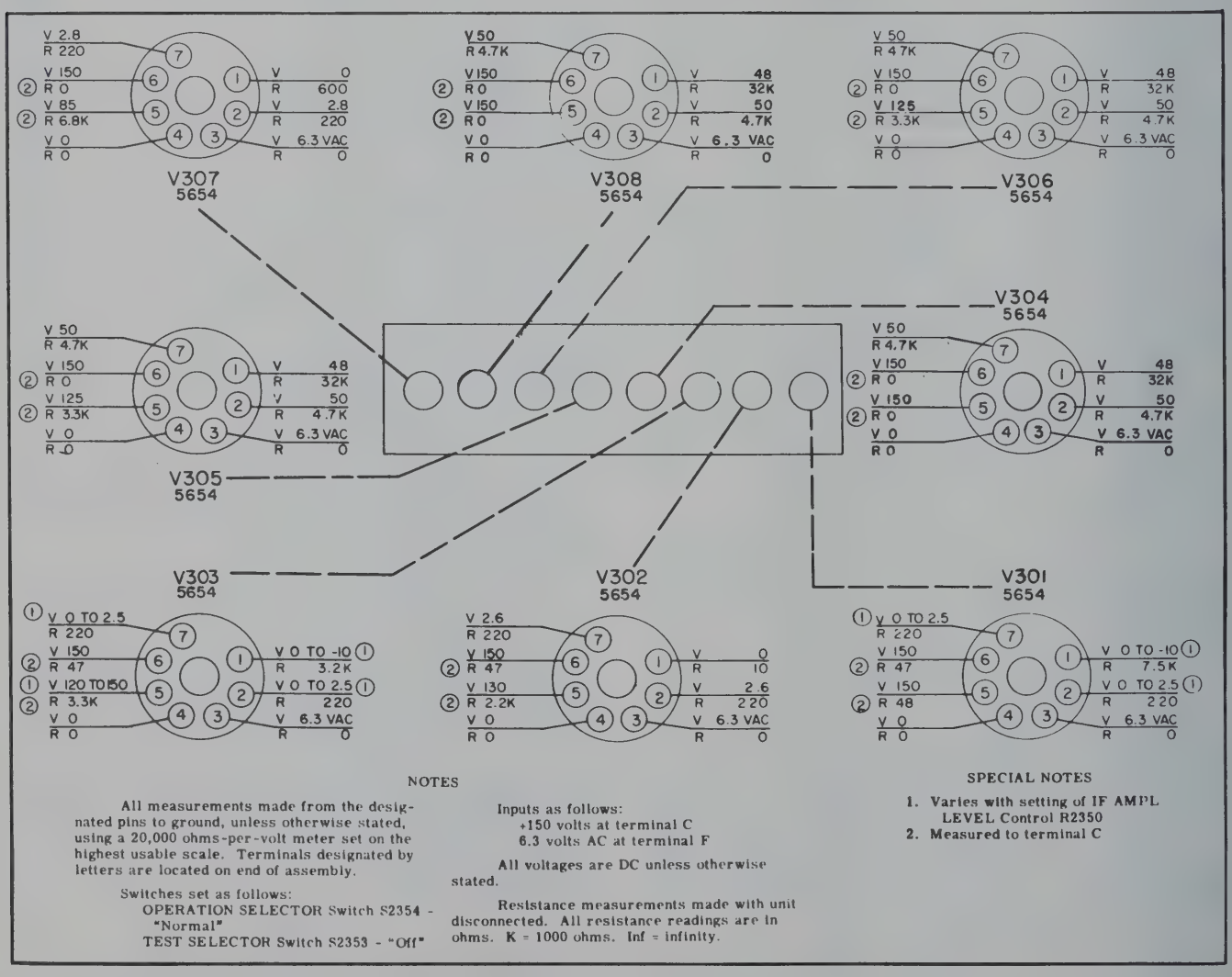
V307 5654
V308 5654
V306 5654
V304 5654
V305 5654
V303 5654
V302 5654
V301 5654
NOTES
All measurements made from the designated pins to ground, unless otherwise stated, using a 20,000 ohms-per-volt meter set on the highest usable scale. Terminals designated by letters are located on end of assembly.
Switches set as follows:
OPERATION SELECTOR Switch S2354 - "Normal"
TEST SELECTOR Switch S2353 - "Off"
Inputs as follows:
+150 volts at terminal C
6.3 volts AC at terminal F
All voltages are DC unless otherwise stated.
Resistance measurements made with unit disconnected. All resistance readings are in ohms. K = 1000 ohms. Inf = infinity.
SPECIAL NOTES
1. Varies with setting of IF AMPL LEVEL Control R2350
2. Measured to terminal C

Figure 7—44. Signal Comparator Voltage and Resistance Measurements (60-mc Amplifier)

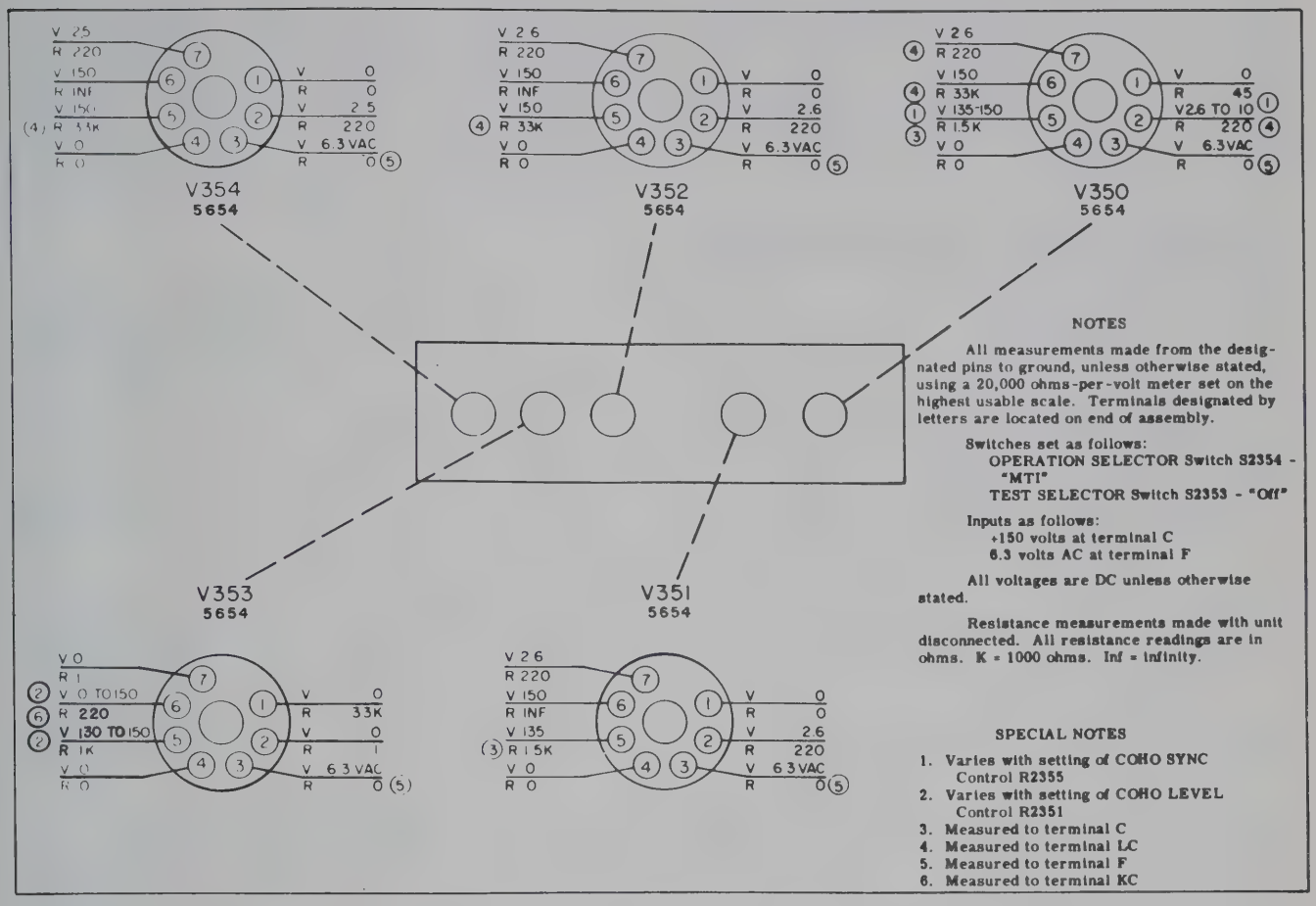
V354 5654
V352 5654
V350 5654
V353 5654
V351 5654
NOTES
All measurements made from the designated pins to ground, unless otherwise stated, using a 20,000 ohms-per-volt meter set on the highest usable scale. Terminals designated by letters are located on end of assembly.
Switches set as follows:
OPERATION SELECTOR Switch S2354 - "MTI"
TEST SELECTOR Switch S2353 - "Off"
Inputs as follows:
+150 volts at terminal C
6.3 volts AC at terminal F
All voltages are DC unless otherwise stated.
Resistance measurements made with unit disconnected. All resistance readings are in ohms. K = 1000 ohms. Inf = infinity.
SPECIAL NOTES
1. Varies with setting of COHO SYNC Control R2355
2. Varies with setting of COHO LEVEL Control R2351
3. Measured to terminal C
4. Measured to terminal LC
5. Measured to terminal F
6. Measured to terminal KC

Figure 7—45. Signal Comparator Voltage and Resistance Measurements (Coherent Oscillator)

2. Adjust the vertical amplifier gain of Signal Generator TS-452/U so that the 60-Mc IF amplifier noise is plainly visible on the scope baseline. (Keep the 60-Mc IF amplifier gain in full.)

3. Cut out steps of the RF attenuator of the TS-452/U until the height of the scope pattern is about 1/2 the diameter of the tube. (Adjust the scope centering and scope horizontal amplifier gain as required.)

4. Measure the distance from the base-line to the top of the signal. (The measurement can be made by marks on the edge of a piece of paper laid against the scope.)

5. Log the amount of RF attenuation cut in on the TS-452/U.

6. Remove the TS-452/U output cable from J307 of the 60-Mc IF amplifier, and also disconnect the test lead between the scope input and terminal PM of the 60-Mc IF amplifier.

7. Connect the special adapter (see figure 7—38) on the end of the TS-452/U output cable.

8. Connect the traveling detector (probe) of the TS-452/U between the input to the vertical amplifier and the output connections of the special adapter.

9. Cut out attenuator steps until the amplitude of the scope signal is the same as that measured in step 4. above.

10. Subtract the amount of attenuation cut in from that logged in step 5. above. The difference is the db gain figure of the 60-Mc IF amplifier, and should be 87 $\pm$ 3 db.

11. Remove the 2-ft test lead from terminal PM and connect it to terminal OV. Recheck the gain by repeating steps 1. through 10. above. The difference in gain measured between terminals OV and PM should be less than 3 db.

(*d*) CHECKING LIMIT LEVEL OF 60-MC IF AMPLIFIER.

Test equipment required:
Signal Generator TS-497/URR
Attenuator box, 111.5 db, 50 ohms

Vacuum-Tube Voltmeter (ME-25A/U, TS-505/U or AN/USM-34)

1. Connect the signal generator through a 111.5-db 50-ohm attenuator box to J307 of the 60-Mc IF amplifier (P307 removed).

2. Connect the vacuum-tube voltmeter between terminal OV (−) and ground (+). (Terminal OV is located on the end of the 60-Mc IF amplifier, on the underside of the chassis.)

3. With no signal input from the signal generator, adjust the IF AMPL LEVEL (signal comparator panel) for a noise level of −0.1 volt dc on the VTVM. Use the lowest scale possible.

4. Set the VTVM on the next higher scale.

5. With a 60-Mc (±0.2 Mc) input signal from the high output terminal of the signal generator, cut in sufficient attenuation to prevent the amplifier from reaching limit level. (When below limit level, adding attenuation should reduce the meter reading.)

6. Peak the meter reading by tuning C305 on the 60-Mc IF amplifier.

7. Cut out all attenuation; the meter should read -4.0 ±0.6 volts dc.

8. Turn off the signal generator and turn the IF AMPL. LEVEL control fully clockwise. The noise should give a reading of -0.33 ±0.14 volt dc.

9. Remove the vacuum-tube voltmeter test lead from terminal OV and connect it to terminal PM. Repeat steps *3.* through *8.* above. The reading obtained in step *7.* should be within 0.5 volts of the reading obtained with the vacuum-tube voltmeter test lead connected to terminal OV. The reading obtained in step *8.* should be within 0.15 volts of the reading obtained with the vacuum-tube voltmeter test lead connected to terminal OV.

10. Disconnect the test equipment.

(*e*) CHECKING ALIGNMENT OF 9-MC DELAY AND NON-DELAY AMPLIFIER.

The method of checking the alignment is the same for both amplifiers.

Test equipment required:

Signal Generator TS-452/U or equivalent
Special test lead (see figure 7—38)
5000-ohm 1/2-watt resistor (used for decoupling)

The procedure is as follows:

1. Pull the signal comparator out of its case as far as the chassis stops.

2. Ground pin 2 of V3301 in the video bal-

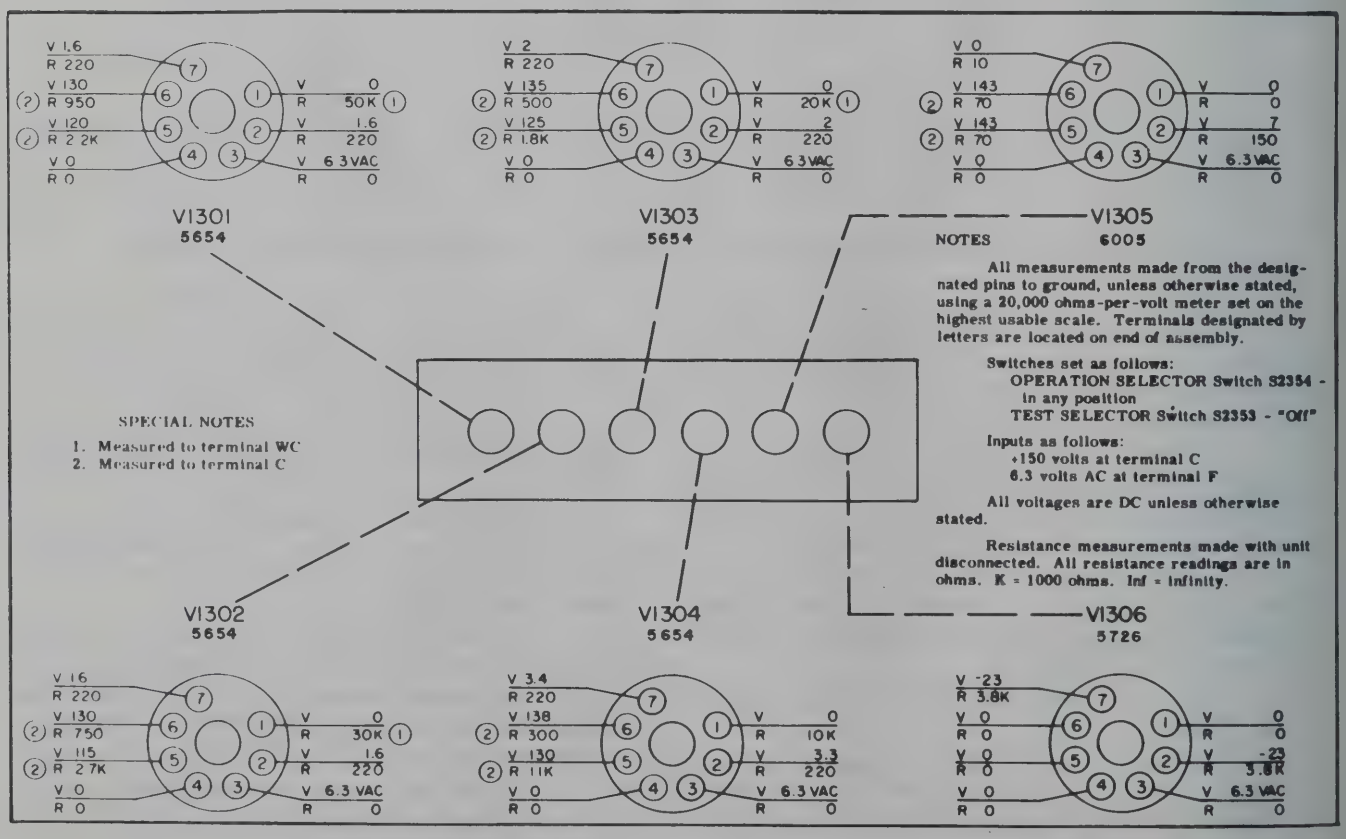
V1301
5654
V1303
5654
V1305
6005
V1302
5654
V1304
5654
V1306
5726
NOTES
All measurements made from the designated pins to ground, unless otherwise stated, using a 20,000 ohms-per-volt meter set on the highest usable scale. Terminals designated by letters are located on end of assembly.
Switches set as follows:
OPERATION SELECTOR Switch S2354 - in any position
TEST SELECTOR Switch S2353 - "Off"
Inputs as follows:
+150 volts at terminal C
6.3 volts AC at terminal F
All voltages are DC unless otherwise stated.
Resistance measurements made with unit disconnected. All resistance readings are in ohms. K = 1000 ohms. Inf = infinity.
SPECIAL NOTES
1. Measured to terminal WC
2. Measured to terminal C

Figure 7—46. Signal Comparator Voltage and Resistance Measurements (Delay Amplifier)

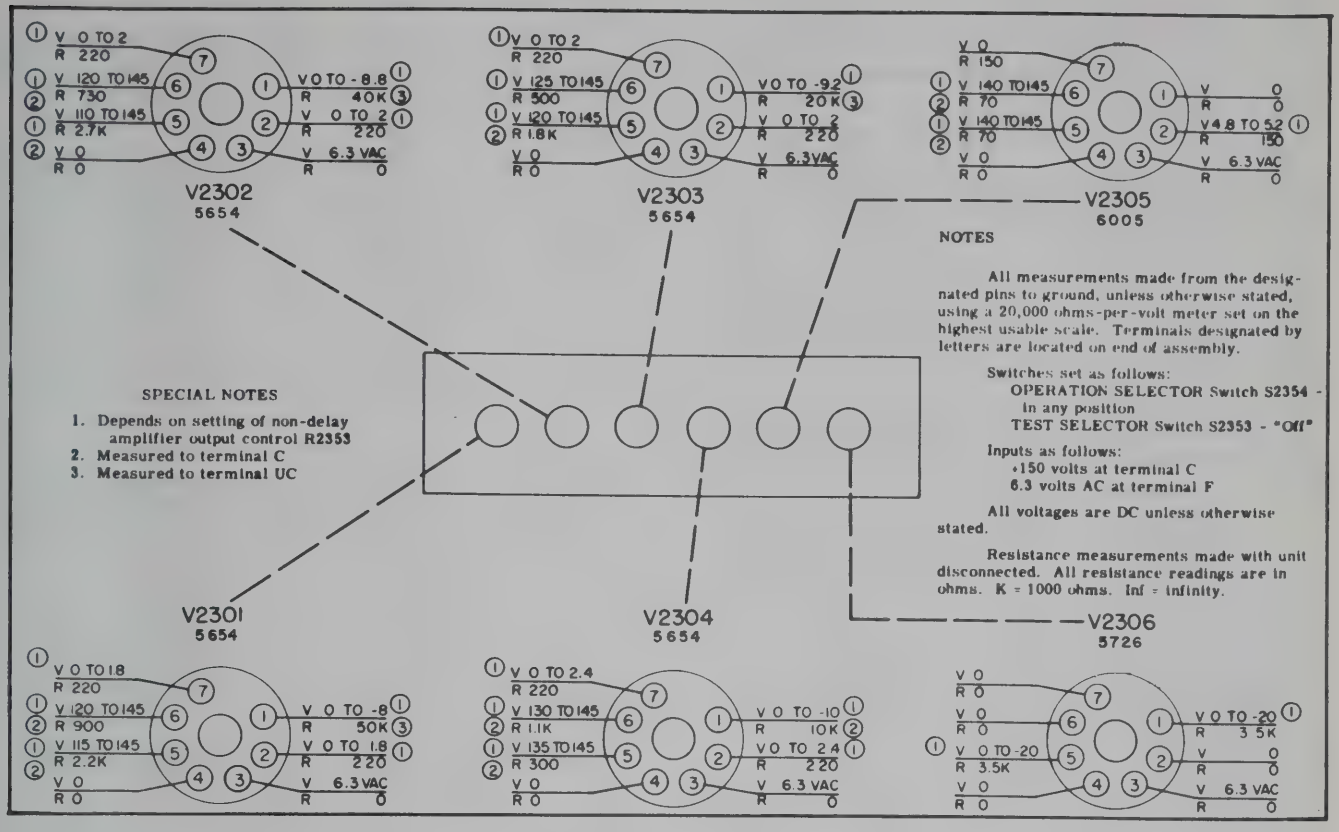
V2302 5654
V2303 5654
V2305 6005
V2301 5654
V2304 5654
V2306 5726
SPECIAL NOTES
1. Depends on setting of non-delay amplifier output control R2353
2. Measured to terminal C
3. Measured to terminal UC
NOTES
All measurements made from the designated pins to ground, unless otherwise stated, using a 20,000 ohms-per-volt meter set on the highest usable scale. Terminals designated by letters are located on end of assembly.
Switches set as follows:
OPERATION SELECTOR Switch S2354 - in any position
TEST SELECTOR Switch S2353 - "Off"
Inputs as follows:
+150 volts at terminal C
6.3 volts AC at terminal F
All voltages are DC unless otherwise stated.
Resistance measurements made with unit disconnected. All resistance readings are in ohms. K = 1000 ohms. Inf = infinity.

Figure 7—47. Signal Comparator Voltage and Resistance Measurements (Non-delay Amplifier)

ancer and amplifier section. This disables the automatic gain control circuit of the delay amplifier.

3. Warm up the equipment for 10 to 15 minutes; and if the delay amplifier is to be checked, adjust the AMPL. BALANCE control (signal comparator panel) for a red-line reading and turn the NON-DELAY AMPL. OUT control fully counterclockwise.

4. If the non-delay amplifier is to be checked, adjust the NON-DELAY AMPL. OUT control for a red-line reading and turn the AMPL. BALANCE control fully counterclockwise.

Note

Steps *3.* and *4.* set the the amplifier being checked at its normal operating gain. Also, 9-Mc output from the amplifier, not being measured, is removed from the common output circuit.

5. Remove the appropriate amplifier input connector P1301 (delay amplifier) or P2301 (non-delay amplifier). (The connectors are located on the ends of the amplifiers, beneath the signal comparator chassis.)

6. Connect the output of the TS-452/U to the amplifier input jack, J1301 (delay amplifier) or J2301 (non-delay amplifier).

7. Spot-solder a 5000-ohm 1/2-watt resistor to the output of the amplifier being checked (terminal WV, delay amplifier; terminal UV, non-delay amplifier).

8. Connect the special test lead (see figure 7—38) between the free end of the 5000-ohm resistor and the vertical amplifier input jack of the TS-452/U.

9. On the TS-452/U, install the 5—11-Mc oscillator coil, cut in all of the attenuation (101 db), and connect the power cable to J409 on the power supply unit.

10. With the equipment energized (no radiation), adjust the TS-452/U vertical amplifier control so that noise is just perceptible on the scope baseline.

11. Cut out attenuator steps on the TS-452/U until the scope pattern is about 1/2 the diameter of the scope tube.

Note

The pattern will be negative for the delay amplifier and positive for the non-delay amplifier.

12. Adjust the TS-452/U scope horizontal gain and centering controls so that the pattern nearly fills the screen.

13. Temporarily cut in an additional 3 db of

attenuation to locate the -3-db position on the scope screen. (Mark the screen or use a transparent scale.)

14. Using the TS-452/U wavemeter marker, check the center frequency and measure the bandwidth at the -3-db points.

Tolerances

Center frequency limits — 9.0 ± 0.3 Mc
Delay amplifier bandwidth — 2.75 ± 0.3 Mc
Non-delay amplifier bandwidth — 1.8 ± 0.2 Mc

15. If gain measurements are to be made, proceed to paragraph (*f*) directly below. Otherwise, return the equipment to operating condition as in the following step.

16. Shut down the equipment, remove the test equipment, unsolder the 5000-ohm resistor, unground pin 2 of V3301, and reconnect the amplifier input plug, P1301 or P2301.

(*f*) CHECKING GAIN OF DELAY AMPLIFIER AND NON-DELAY AMPLIFIER.

The method of checking the gain of both amplifiers is the same.

Test equipment required:
Signal Generator TS-452/U or equivalent
Special test lead (see figure 7—38)
Special adapter (see figure 7—38)

The procedure is as follows:

1. With the signal comparator chassis pulled out of its case as far as the drawer stops, remove the detector tube of the amplifier *not* being measured (V1306 in non-delay amplifier; V2306 in delay amplifier).

2. Set the TEST SELECTOR switch (signal comparator) to its OFF position.

3. Connect the output cable of the TS-452/U to the input of the amplifier to be checked (J1301, non-delay amplifier; J2301, delay amplifier).

4. Connect the special test lead (figure 7—38) between the output of the amplifier being measured (terminal UV, non-delay amplifier; terminal WV, delay amplifier) and the vertical input of the TS-452/U.

5. On the TS-452/U, install the 5-11-Mc oscillator coil, cut in all of the attenuator, and plug the power cord into power receptacle J409 (power supply unit).

6. Warm up the equipment for 10 to 15 minutes and set the amplifier being measured at full gain. (If the non-delay amplifier is being measured, turn the NON DELAY AMPL. OUT control fully clockwise; if the delay amplifier is being measured, ground terminal WC on the end of the delay amplifier subchassis.)

7. Adjust the TS-452/U vertical amplifier gain control so that noise is just perceptible on the base-line.

8. Cut out attenuation until the amplitude of the amplifier pattern on the scope is about one half of the diameter of the scope tube.

9. Record the amplitude of the pattern (can be recorded by pencil marks on the edge of a slip of paper) and also record the TS-452/U attenuation.

10. Remove the TS-452/U output cable from the amplifier input jack (J1301 or J2301), and also remove the special test lead from the TS-452/U to the output of the amplifier.

11. Connect the special adapter (see figure 7—38) to the output cable of the TS-452/U, and connect the traveling detector probe of the TS-452/U into the vertical amplifier input jack (TS-452/U).

12. Connect the TS-452/U traveling detector to the special adapter.

13. Cut out TS-452/U attenuation until the amplitude of the pattern is the same as that recorded in step *9.* above.

14. Subtract the amount of attenuation on the TS-452/U from the value recorded in step (9) above. This is the gain of the amplifier; it should be 45 ± 2 db for the non-delay amplifier and 52 ± 2 db for the delay amplifier.

15. Replace V1306 or V2306 in the non-delay or delay amplifier.

16. Disconnect the test equipment and adjust the signal comparator for red-line readings after the check is completed.

c. PULSE DELAY NETWORK W2350 CHECK.

(*1*) CHECKING. *(See figure 7—36.)*

Complete failure of the delay network is unlikely unless the signal comparator is subject to severe shock, thus causing damage to the crystal or the transducers. With normal handling and use, the network attenuation is not likely to increase.

If the attenuation of W2350 changes, it will become necessary to change the setting of the AMPL. BALANCE control (R2354) in order to obtain a red-line reading of the signal comparator test meter M2350. The delay network is usable as long as R2354 can be adjusted for a red-line deflection.

The procedure for checking W2350 consists of substituting an attenuator, Z2350, which has the loss (approximately 60 db) that the delay network would have before it becomes unusable. The normal attenuation of W2350 is 35 to 45 db.

The position of the AMPL. BALANCE control, R2354, should be approximately in the middle of its range for a red-line deflection of M2350 if the delay network and the delay amplifier circuits are normal. If the adjustment of R2354 is almost fully clockwise or if, with R2354 in the full-clockwise position, the deflection of M2350 is below the red line, either the delay network or the delay amplifier circuit may be at fault.

When the test attenuator, Z2350, is substituted for W2350, the delay amplifier circuit is at fault if the same condition exists. However, if the adjustment of R2354 is in mid-position for a red-line adjustment, the delay network is at fault and replacement will be necessary.

An approximation of the degree of attenuation can be obtained by adjusting for red-line readings on M2350 with the test attenuator in place. Then connect the delay network, W2350, back into the circuit. If the deflection of M2350 is half the red-line deflection, the attenuation of W2350 is approximately 6 db below that of Z2350, or approximately 66 db. If M2350 shows one quarter of the red-line deflection, the attenuation of W2350 is approximately 12 db below 60 db, or 72 db. It should be remembered that this is only an approximation and that the delay network should work satisfactorily as long as a red-line deflection can be obtained.

To connect the test attenuator, proceed as follows:

(*a*) With the equipment shut down, pull out the signal comparator chassis as far as the chassis stops.

CAUTION

If at any time it is necessary to pull the chassis out beyond its stops, first disconnect the delay network cables from the underside of the chassis at J1301 and J1350. Otherwise, damage to the cables and/or cable fittings may result (see figure 7—40).

(*b*) Disconnect the two coaxial cables attached to the delay network at J2350 and J2351 (see figure 7—40).

(*c*) Connect the test attenuator, Z2350, to P2350 and P2351 as shown in figure 7—42. Z2350 is found mounted in clips at the rear and on top of the signal comparator chassis (as shown in figure 7—48).

(*d*) Close the chassis and make checks.

(*e*) Return Z2350 to its mount and reconnect W2350 when the checks are completed.

d. MTI ALIGNMENT.

(1) Energize the equipment and allow a one-half hour warm-up period before making adjustments.

(2) Using a 20,000 ohms per volt voltmeter, measure the following voltages on E401 of the power supply unit. If necessary, adjust the indicated adjustment controls to obtain the specified voltage.

E401 Terminal	Voltage	Adjustment
4A	+300 v	R433
1A	+150 v	R416
5A	+450 v	None
6A	−150 v	None

(3) Tune the receiver for maximum signals, using the L.O. MOTOR control (indicator unit).

(4) At the signal comparator, red-line the meter readings, following the instructions on the front panel.

Note

The I.F. AMPL LEVEL should be red-lined with RADIATE (indicator unit) OFF.

(5) Peak tune for maximum signals, by adjusting capacitor C305 (60 MC I.F. chassis in signal comparator).

Note

Adjustment of C305 may change the I.F. AMPL LEVEL. After adjusting C305, the I.F. AMPL LEVEL control should be readjusted for a red-line meter reading with RADIATE (indicator unit) OFF.

(6) At the signal comparator, set the TEST SELECTOR to (5) AMP BALANCE and the OPERATION SELECTOR to REMOTE. Adjust the MTI AMPLITUDE BALANCE control on the indicator for a red-line reading on the signal comparator TEST METER.

(7) Adjust CARRIER GATE LENGTH control R1365 (signal comparator chassis) in a clockwise direction until the magnetron current, observed on the MAGNETRON CURRENT meter of the receiver-transmitter, suddenly drops to about 30 milliamperes. Slowly adjust R1365 in a counterclockwise direction until the magnetron current *jumps* to 40 milliamperes or more.

(8) Vary the MTI AMPLITUDE BALANCE control on the indicator, and observe the MAGNETRON CURRENT meter on the receiver-transmitter. The magnetron current should suddenly drop by 2, or more, milliamperes, indicating that the MTI trigger is "locked in". If the MTI trigger is not "locked in", repeat steps (6) and (7) above, until the MTI trigger is "locked in".

(9) At the indicator, set the OPERATION selector to GATED MTI and the MTI RANGE GATE to O (maximum counterclockwise). Rotate the antenna and select a good, solid clutter pattern. Stop the antenna on the solid clutter pattern. Set COHO SYNC control R2355 (signal comparator front panel) to its maximum counterclockwise position, set the OPERATION selector of the indicator to COHO ADJ and remove P304 from receptacle J304 (signal comparator front panel).

(10) Slowly adjust capacitor C361 (COHO I.F. chassis of the signal comparator) while carefully observing the pattern on the A-scope. The changing pattern will be dividing into wider blocks of signal, going from or towards the left hand edge of the base line. That is, the signals will appear to be moving towards or away from the start of the base line. At the exact point where the coho oscillator frequency matches the 60-Mc coho sync pulse (zero beat), the signals will suddenly reverse their apparent direction of movement. Set C361 to the zero beat point. Reconnect P304 to J304 (removed in step (9) above).

If it is desired to use Tuned Cavity TS-172B/UP (echo box) to adjust C361, connect the test cable supplied with the echo box from the echo box to receptacle J501 of the receiver-transmitter. Set the TUNE-READ RINGTIME switch of the echo box to the TUNE position and adjust the frequency dial for maximum meter indication. A pattern of square waves will be observed on the A-scope of the indicator. Adjust C361 in the direction to decrease the number of square waves appearing on the A-scope. At the exact point where the coho oscillator frequency matches the 60-Mc coho sync pulse (zero beat) the pattern will drop to a

straight base line. If C361 is adjusted beyond the zero beat point, the amplitude and frequency of the square waves will increase. It will be noted that the apparent polarity of the square waves changes when passing through the zero beat point. Set C361 to the zero beat point. Reconnect P304 to J304 (removed in step (9) above).

(11) At the indicator, set the OPERATION selector to NORMAL VIDEO and adjust the RECEIVER GAIN control for approximately 1/4 inch "grass" as observed on the A-scope. Set the A-scope VIDEO GAIN control fully counterclockwise, then adjust slowly in a clockwise direction to obtain maximum signal amplitude, at the point where further rotation does not increase signal amplitude but does increase noise level. Back off on the control until the signals are at maximum amplitude.

(12) Set the OPERATION selector of the indicator to GATED MTI, the MTI RANGE GATE control to 80, and the A-scope RANGE SELECTOR to 160. Adjust GATE BALANCE control R3328, on the signal comparator front panel, for a straight base line of the trace observed on the A-scope. Check the setting of R3328 by varying the MTI RANGE GATE control through its entire range (0 to 160). The base line should be straight at all positions of the control.

(13) Set the A-scope RANGE SELECTOR to 20 or 40 and the MTI RANGE GATE control fully clockwise (160). Alternately adjust the MTI TIME BALANCE controls on the indicator for the best possible cancellations of fixed targets. Adjust the controls carefully, repeating each adjustment many times.

(14) Adjust COHO SYNC control R2355, on the front panel of the signal comparator, for maximum cancellation with stability of pattern. Set the MTI TIME BALANCE control of the indicator to its mid-position and adjust capacitor C1353 on the signal comparator (see figure 7—51) for maximum cancellation. Readjust

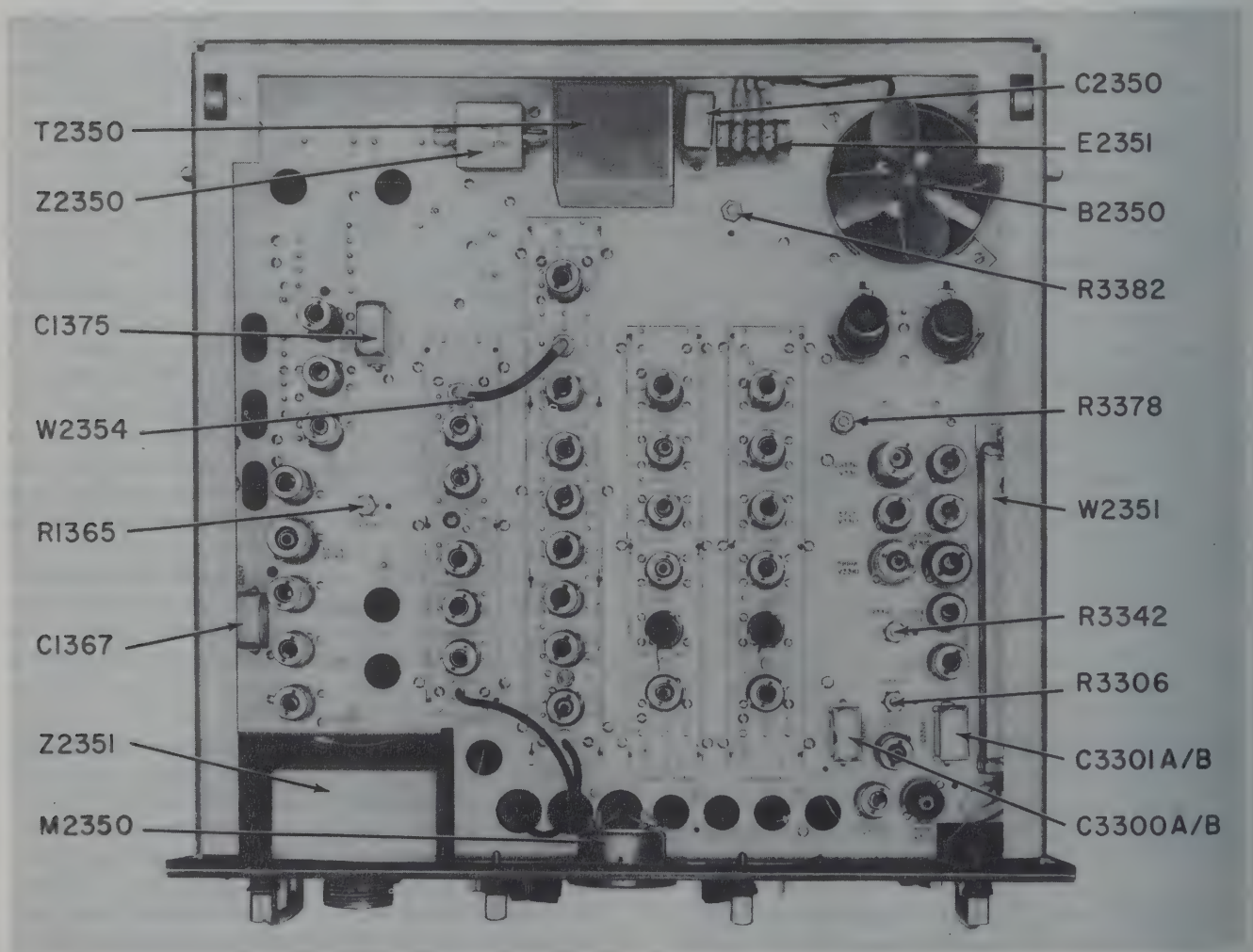

Figure 7—48. Signal Comparator Component Locations (Top Side of Chassis)

the MTI TIME BALANCE control of the indicator for maximum cancellation (little adjustment should be necessary).

(15) Adjust NON DELAY AMPL OUT control R2353 (signal comparator front panel) and the MTI AMPLITUDE BALANCE control (indicator) for maximum cancellation with stability of pattern, as observed on the A-scope. It will be noted that as each control is slowly varied, a distinct dip is observed in the clutter. However, the optimum setting should not cause the meter readings to deviate from red-line (observed on the signal comparator TEST METER) by more than 1/8 inch. Readjust the MTI TIME and AMPLITUDE BALANCE controls at the indicator for maximum cancellation.

(16) Slowly readjust CARRIER GATE LENGTH control R1365 (signal comparator chassis) for the best cancellation with stability of pattern. Move the control slowly, stopping to observe results, readjust the MTI BALANCE controls repeatedly. The optimum setting is the point at which flaming (instability of pattern) is reduced to a minimum or is completely eliminated.

(17) Readjust the COHO SYNC control (signal comparator) for maximum cancellation with stability of pattern.

(18) Readjust the VIDEO GAIN control at the indicator, following the procedure given in step (11) above.

(19) Readjust the MTI BALANCE controls at the indicator.

(20) If excellent MTI results cannot be obtained following the above procedure, see the following paragraph for possible troubles.

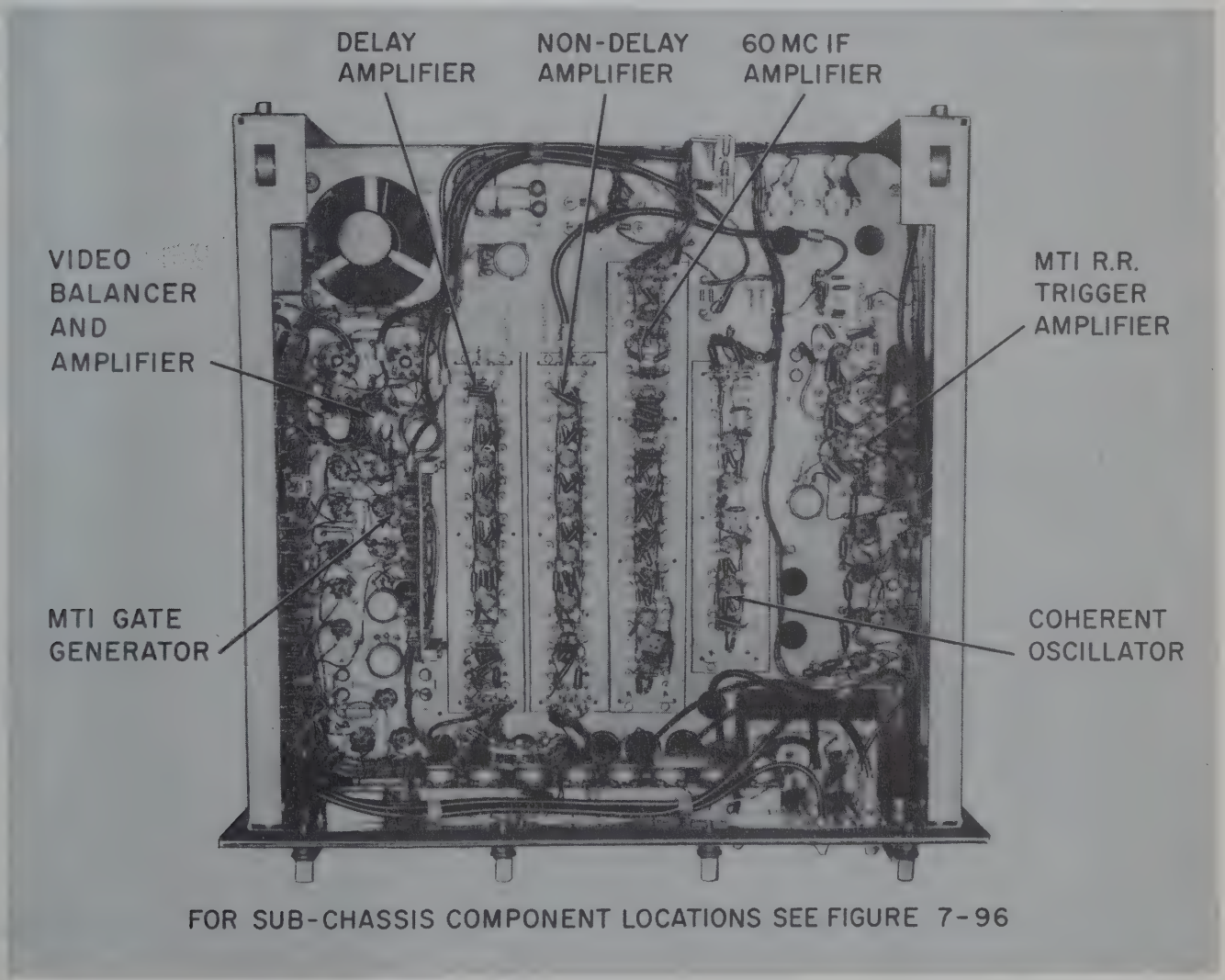

Figure 7—49. Signal Comparator Component Locations (Subchassis)

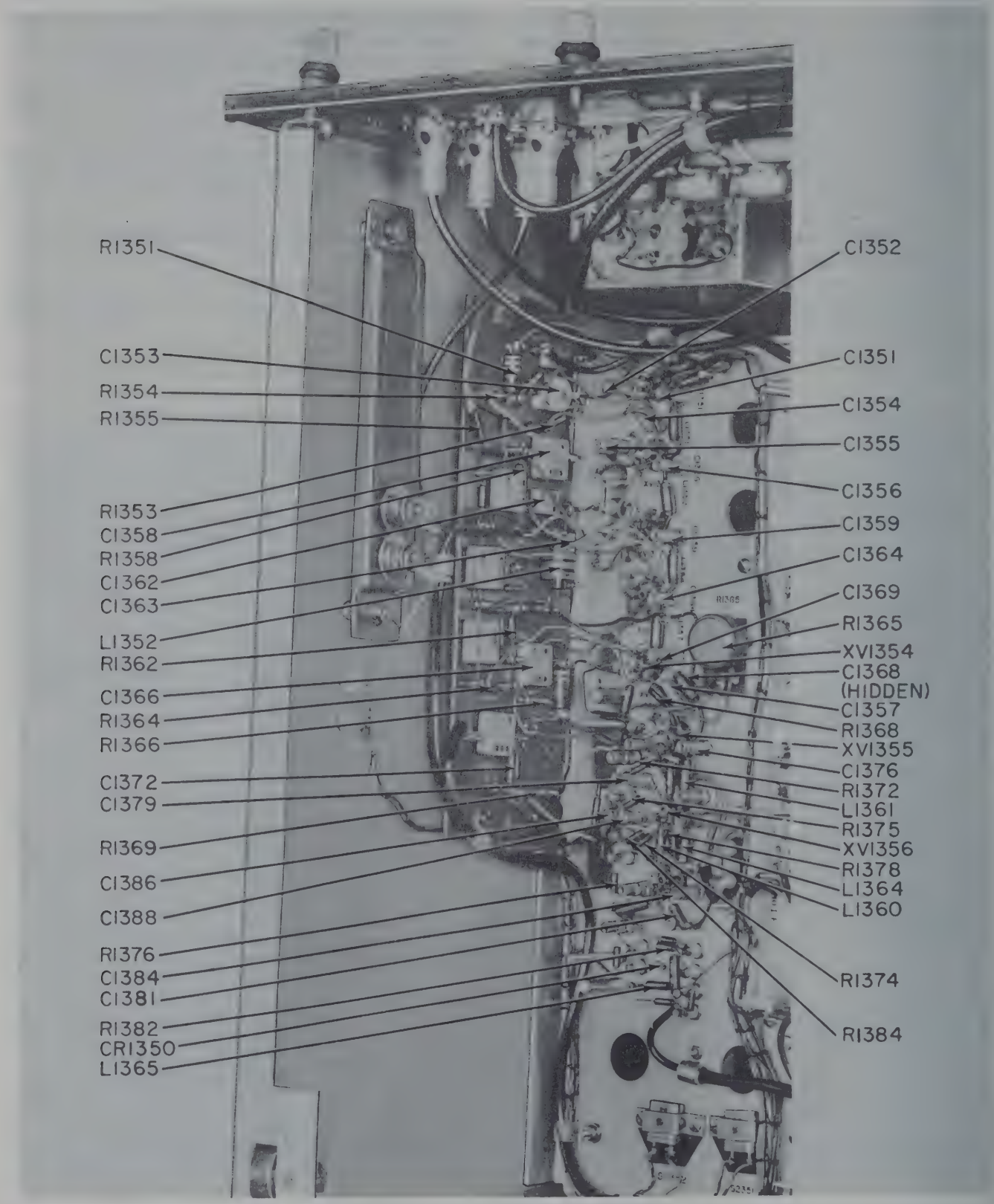

Figure 7—50. Signal Comparator Component Locations (R.R. Trigger Amplifier)

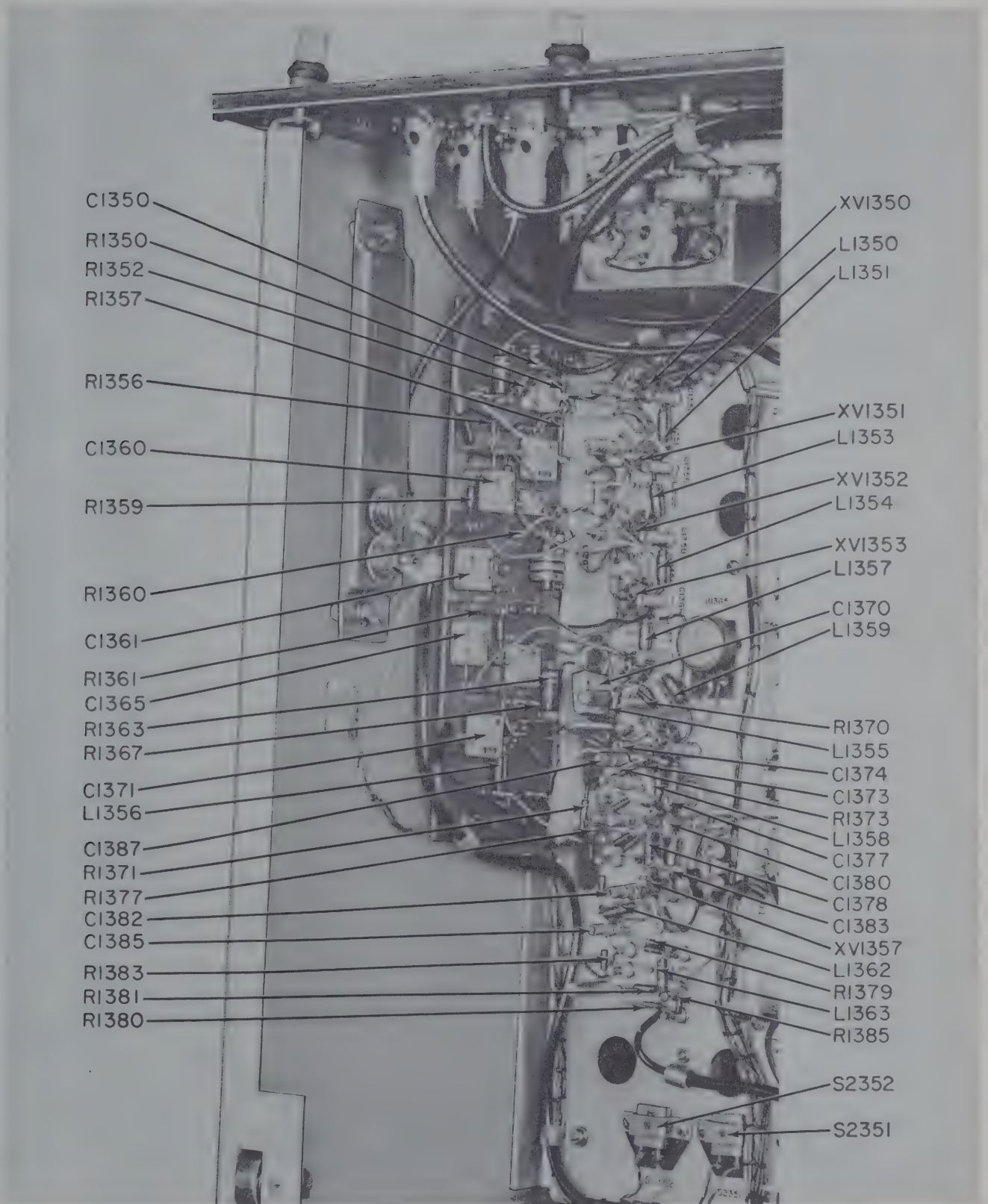

Figure 7—51. Signal Comparator Component Locations (R.R. Trigger Amplifier)

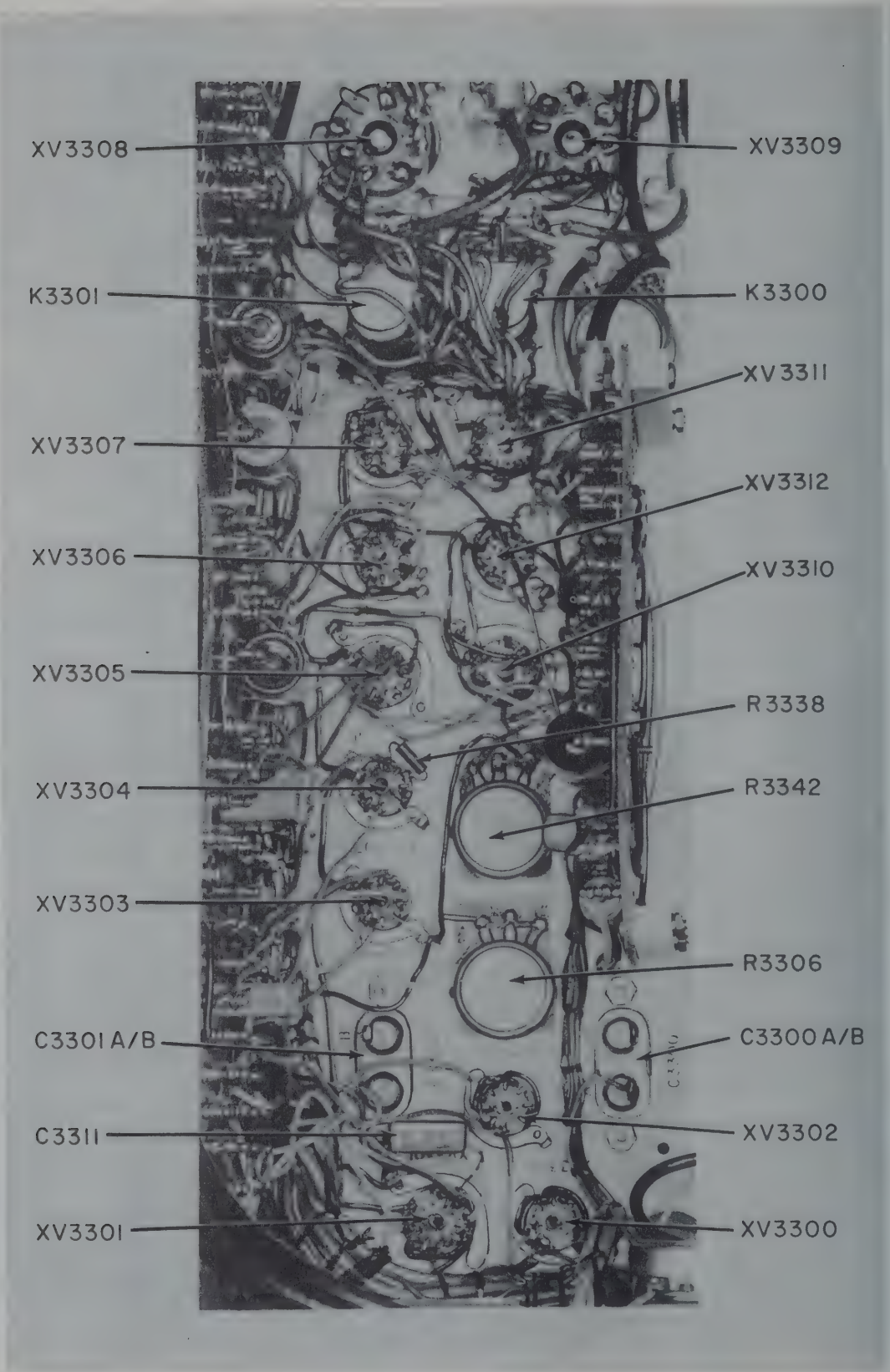

Figure 7—52. Signal Comparator Component Locations (Video Balancer and Amplifier)

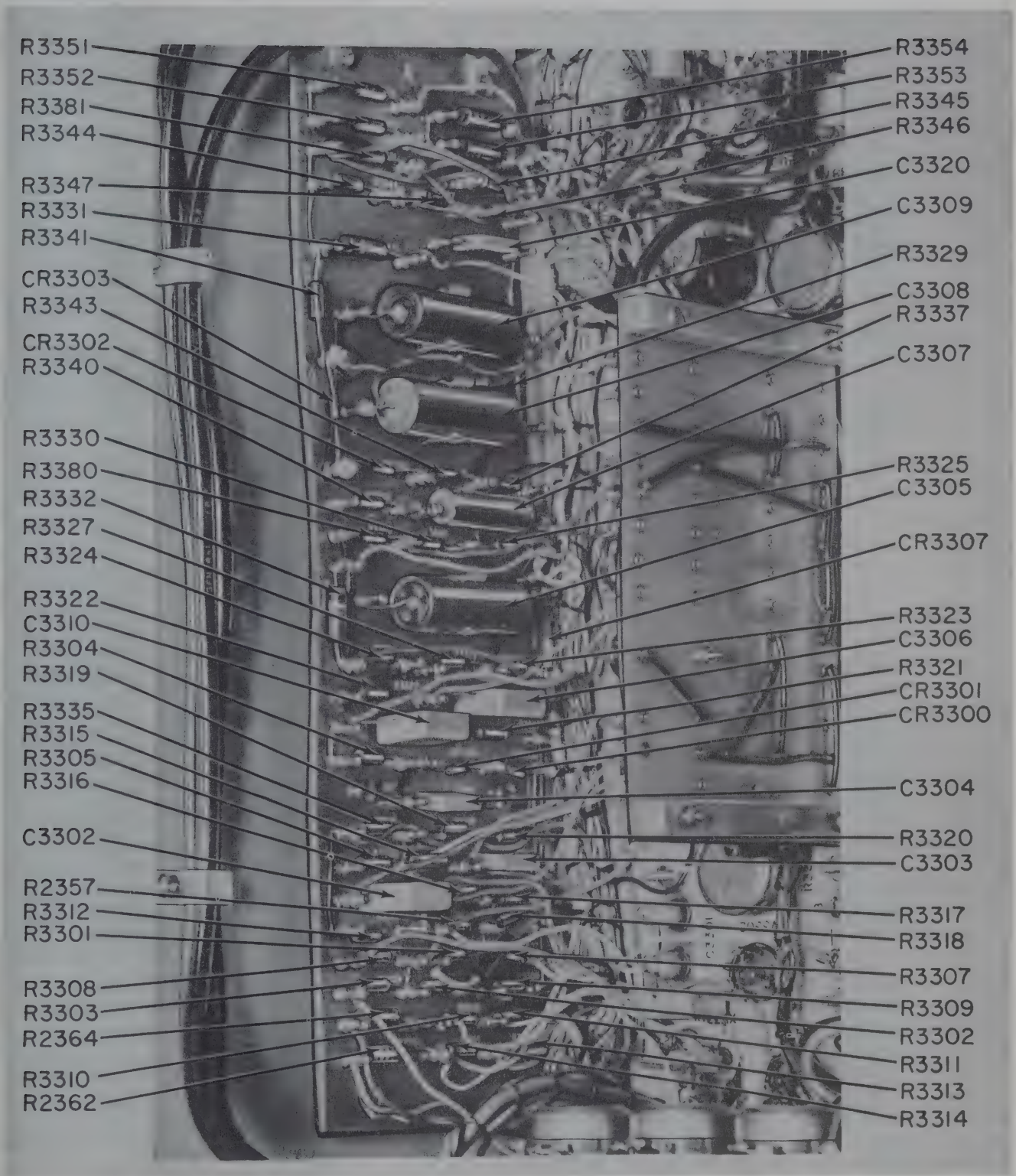

Figure 7—53. Signal Comparator Component Locations (Video Balancer and Amplifier)

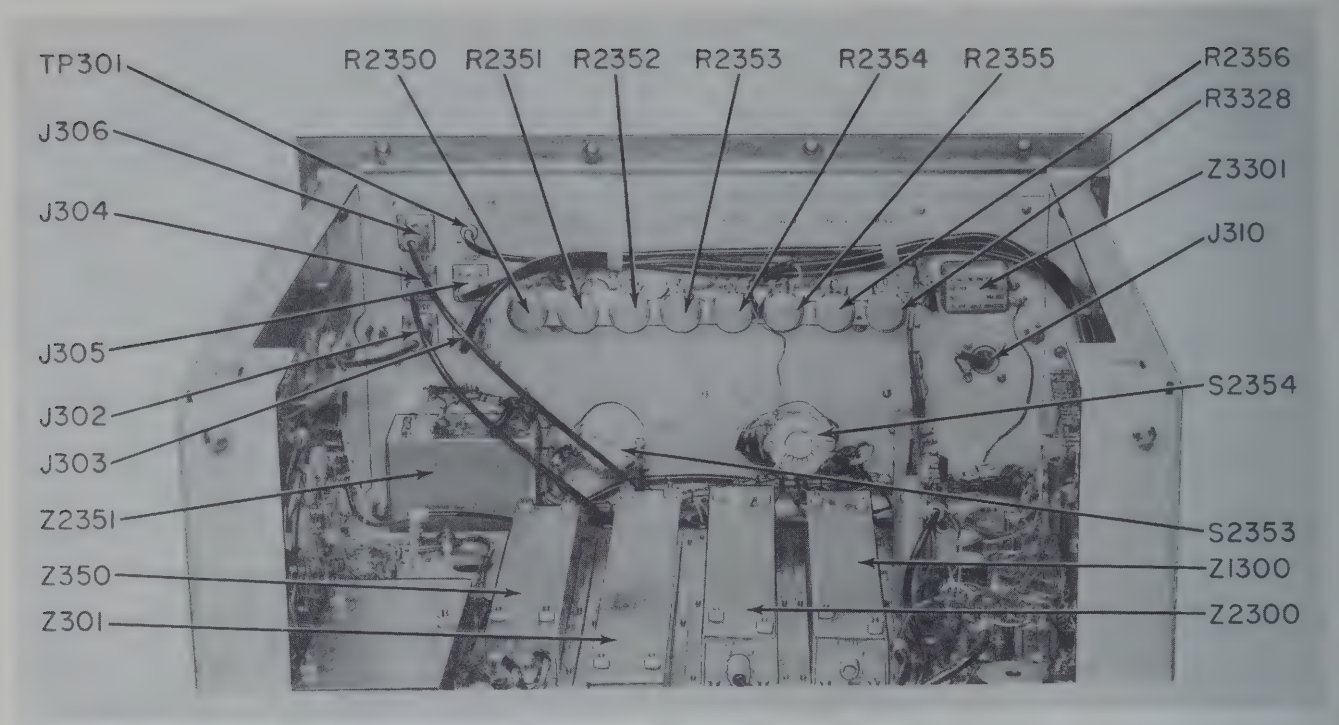

Figure 7—54. Signal Comparator Component Locations (Chassis Inverted)

e. MTI MAINTENANCE.

(1) GENERAL.

Assuming that the signal comparator and the quartz delay line are operating normally, the following factors will affect MTI operation.

Local oscillator (2C40) frequency instability.

Arcing in any part of the RF system.

Magnetron frequency instability, arcing, pulling.

Primary power form factor.

Excessive ripple on voltages delivered from power supply.

Improper MTI alignment.

Weather conditions.

Improper values of regulated voltages.

(2) LOCAL OSCILLATOR FREQUENCY INSTABILITY. (2C40 tube)

Frequency drift of the 2C40 tube can readily be noted by poor cancellation or unstable pattern as viewed on the A-scope when OPERATION SELECTOR of signal comparator is set to COHO ADJUST position.

After carefully aligning the MTI following the procedure given in paragraph 7.*d.* above, if the cancellation is not complete, the 2C40 tube can be suspected. To check the 2C40 tube, stop the antenna on the most distant fixed targets available. If the cancellation of close-in targets is complete but targets further out on the A-scope do not completely cancel, the 2C40 tube is probably drifting in frequency.

When observing the pattern on the A-scope with the indicator OPERATION selector in COHO ADJ, the pattern will normally fluctuate up and down at a random rate, sometimes locking-in solidly for several seconds. However, if the pattern fluctuates at a very rapid rate and the locking-in is not noted, and, if the pattern changes continually, the 2C40 tube is drifting in frequency and must be checked.

To check the frequency stability of the 2C40 tube, proceed as follows:

(*a*) Connect Tuned Cavity TS-172B/UP (echo box) to RF test jack J501. Set the MAGNETRON TUNING dial (receiver-transmitter) to about 550. Tune the echo box to obtain the magnetron frequency. This frequency must be slightly more than 60-Mc below the highest Mc reading obtainable on the echo box. Note this frequency on the echo box dial.

(*b*) Connect the echo box to either the signal or coho cable from the local oscillator using the special adapter available with the TS-172B/UP echo box. (P515 signal cable; P510 — coho cable.) Tune the receiver so that the signals are received with the receiver tuned 60-Mc above the magnetron frequency.

(*c*) Slowly tune the echo box in the vicinity of the echo box dial reading which is the sum of the reading obtained under step (*a*) above, plus 60-Mc.

(*d*) Peak the reading obtained and observe the

echo box meter for at least 10 minutes. During this time the 2C40 frequency should drift only very slightly. If it drifts rapidly or fluctuates so that the echo box must be continually retuned, the 2C40 tube must be replaced and the new tube checked in a similar manner.

The extreme importance of selecting a stable 2C40 tube cannot be over-emphasized. The more stable the frequency of the tube, the better cancellation will be gained, which, with the resultant decrease in grass level, will allow a greater advancement of the MTI video gain, resulting in a greater sensitivity of the system when operating on MTI.

(3) ARCING IN RF LINES, PEDESTAL OR ANTENNA.

It is of extreme importance that no arcing occurs in the entire RF system. If arcing occurs, the resultant impedance mismatch will cause the magnetron frequency to vary from pulse to pulse so that the proper phase relationship cannot be maintained and the MTI cancellation will suffer.

All RF lines should be regularly examined for signs of arcing. Arcing most often occurs because the RF lines were not securely tightened with the strap wrench. Before assembling any RF line, observe that the rubber gaskets are firmly in place. Clean off any arc pits that might have occurred, using crocus cloth (do not use crocus cloth excessively). When joining the two sections, be certain that the two pieces fit snugly into each other before the collar is tightened. Use considerable force to tighten the lines as they must be tight.

Another source of arcing is in the flexible coaxial cable (RF854), where arcing sometimes occurs at the plug end of the cable. Arcing here can be readily noted as the temperature of the metal portion of the cable must never be warmer than the flexible coaxial cable itself. The flexible coaxial cable should always be slightly warmer than the metal plug ends. If the metal plug ends are warmer than the coaxial cable, arcing is present and the cable must be repaired or replaced.

Arcing can also occur in the pedestal at the lower end of the rotating joint (RF752) if the slip-ring fingers become fouled with oil, water or graph-alloy dust from RF856. At certain intervals, the entire pedestal should be inspected. RF752 should be removed, and the slip-ring fingers pulled out using the special tool required.

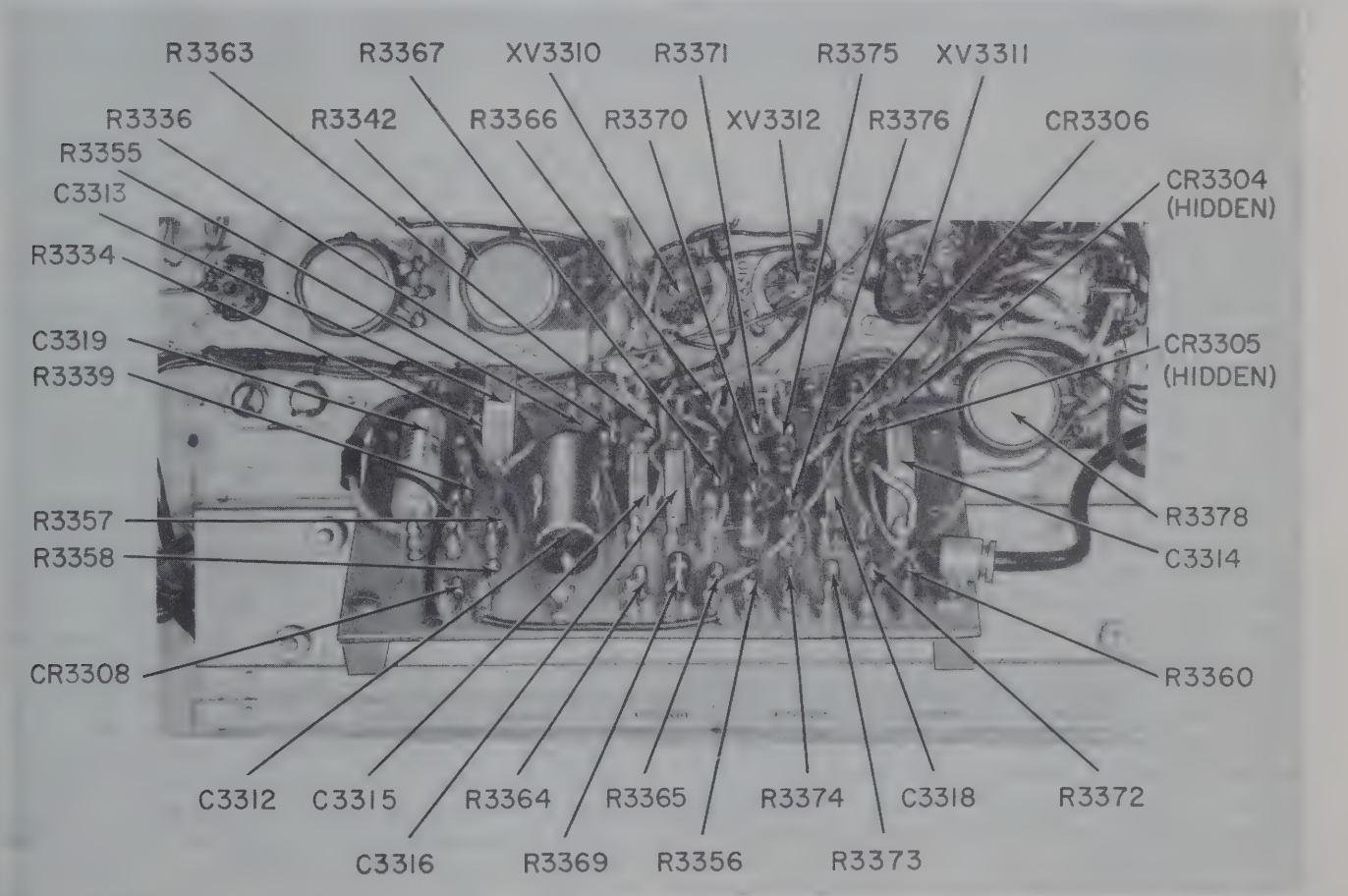

Figure 7—55. Signal Comparator Component Locations (MTI Gate Generator)

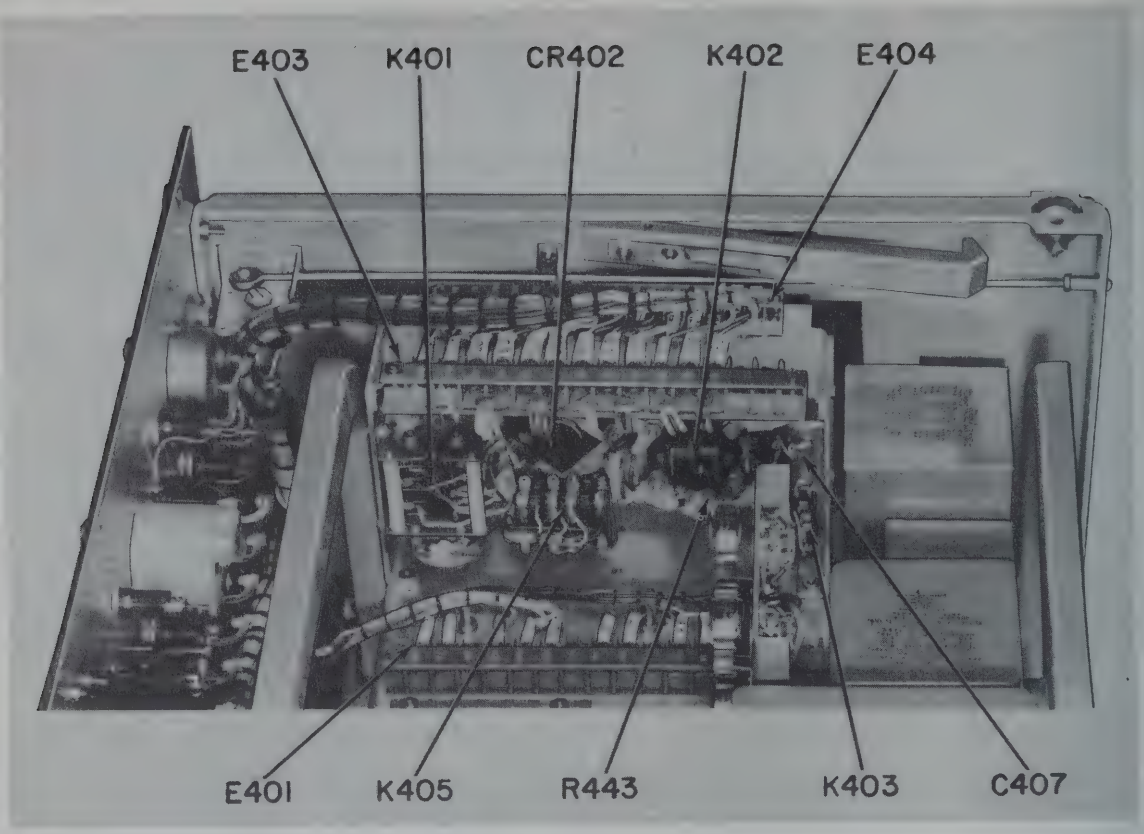

Figure 7—56. Power Supply Component Locations (Rectifier Tubes Removed)

The pedestal should then be inspected, cleaned, burnished and reassembled.

If RF752 is not properly centered in the pedestal, RF856 (upper rotating joint) will not readily match up so that the graphalloy portion will fit under the fingers of RF752. Care should always be taken that RF752 is accurately centered. This is necessary to prevent arcing and undue wear or damage to either RF752 or RF856.

Water in the RF lines, resulting from leakage or excessive condensation, will result in serious arcing, often sufficiently severe to operate the protective relay. The corrosive action of the arc, breaking down the water and forming a corrosive acid, will rapidly destroy the plating of the RF lines. If excessive condensation is noted, check that both blower motors (B701 and B702) are operating, that the air entrance plates on the servo amplifier are removed and that the pedestal is canvas covered to protect it from direct rain if it is located where it is exposed to weather. Defective or missing rubber gaskets could allow rain and dew to enter the RF lines.

Extreme care must be taken to securely tighten all RF lines as once an RF line arcs, the resultant pitting of the contact surface makes it difficult to tighten the lines so that future arcing will not occur.

(4) MAGNETRON FREQUENCY INSTABILITY.

If the magnetron is properly aged using a variac, its frequency stability is usually excellent. As with all variable frequency magnetrons, it is possible to tune them to an unstable point, which may occur at one or more places over its entire tuning range. A slight change in magnetron frequency should result in stable operation.

It has been noted that magnetrons which have not been properly aged, will often act very erratically when set to below 5 on the magnetron tuning dial. If it is necessary to use a magnetron without sufficient aging, always operate the magnetron in the frequency spectrum which results in minimum operation of the protective relay.

To check the frequency stability of the 5J26 magnetron, connect the echo box to the RF test jack (J501) and tune the echo box for maximum dial reading. Observe this reading for at least ten minutes. During this time the magnetron may drift slightly but its drift should be very slow and always in the same direction. Rotate the antenna at various speeds and observe if the magnetron frequency changes at any portions of the 360° rotation. If it does, there are two possible causes for this; arcing in the RF752 rotary joint or magnetron pulling.

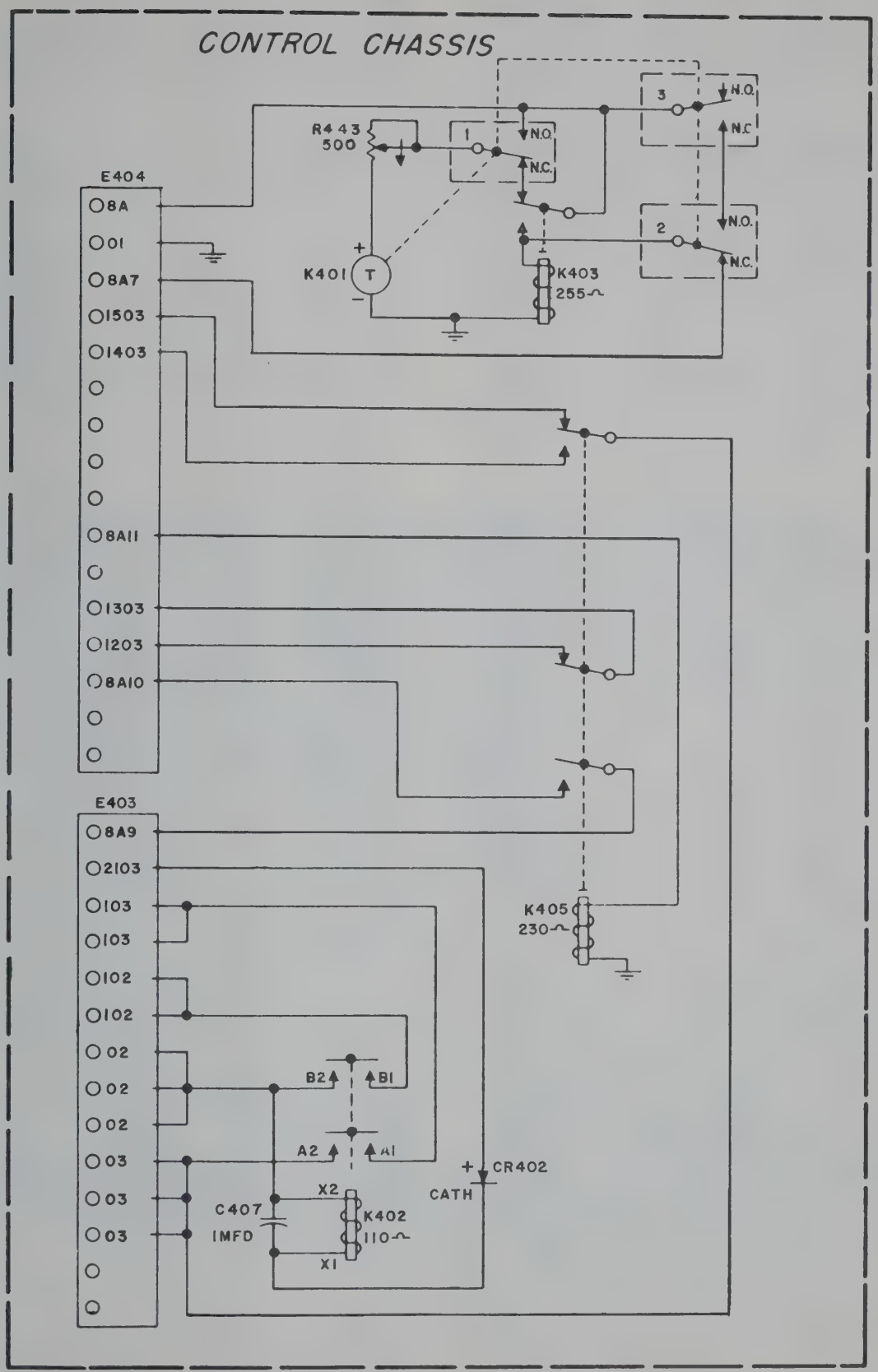

Figure 7—57. Power Supply Control Chassis

(*a*) Arcing in the rotary joint will cause a mismatch to the magnetron which will result in the magnetron changing frequency while the arcing occurs. The remedy is to check the rotary joint as described in step (3) above.

(*b*) Magnetron pulling occurs when the radar set is so located that large buildings, steel towers, hill, etc., are very near the antenna. When the magnetron fires, a large burst of energy is radiated. These nearby objects will reflect a high level of returned energy back into the magnetron before it has completed its cycle, causing a mismatch to the magnetron with the resultant change in frequency. The only remedy for this is to change the site location, if possible.

With the antenna rotation off, if it is noted that the magnetron output varies rapidly (as viewed on the echo box meter), this is usually a sign of arcing in the RF lines. If this flickering is noted, set the TRIGGER switch at the modulator to INTERNAL and observe the echo box meter. If the reading is then stable, the faults may be in the signal comparator. If this flickering occurs on both EXTERNAL and INTERNAL trigger, (it will usually be more pronounced when on INTERNAL trigger), the source of arcing will have to be located and remedied. Arcing in RF854 is a common cause of this trouble.

(5) PRIMARY POWER FORM FACTOR.

With different prime power voltage shapes, the output of the modulator will vary from one power unit to the next even though the line voltage and frequency are the same.

To overcome the influence of the line form factor, the following procedure should be used:

(*a*) Adjust the engine speed for proper output voltage and frequency. Under no circumstances should the line voltage be in excess of 121 volts or the line frequency below 385 cycles. High line voltage can cause synchro failures and also poor regulation of the B-plus voltages.

(*b*) If the vibrating reed frequency meter shows a continual change in frequency or if the line voltage drops much below 115V ac, the gasoline engine must be adjusted, repaired or replaced. Normal MTI operation *cannot* be obtained if the line voltage or frequency is fluctuating.

(*c*) Adjust the primary taps on T151 in the modulator until the magnetron current is as close to 42 milliamperes as obtainable, at least 40 milliamperes. At no time should the magnetron current exceed 46 milliamperes.

(6) EXCESSIVE D-C VOLTAGE RIPPLE.

Excessive ripple will modulate the d-c voltage so that the phase relation from pulse to pulse will not be the same. This will cause the MTI cancellation to suffer noticeably as a flutter of the cancelled fixed targets. These ripple voltages should be checked regularly and, if not within tolerance, the filtering circuits, ground connections, etc., must be checked until the ripple is well within the tolerances given. Using a vacuum-tube voltmeter, measure the ripple of the voltages listed below. The voltages are measured at E401 of the power supply (see figure 7–56). The input voltage must be stable for this check.

E401 Terminal	*Voltage*	*Ripple Tolerance*
1-A	+150 v	.04 v
4-A	+300 v	.075 v
5-A	+450 v	6 v
6-A	−150 v	.075 v

To avoid much unnecessary work, always be certain that the radar system has been carefully aligned following the MTI alignment procedure (preceding paragraph) before considering that the trouble is in the local oscillator, magnetron, arcing RF lines, etc.

(7) WEATHER CONDITIONS.

It has been repeatedly noticed that rain clouds, snow and certain other type clouds will affect the apparent efficiency of the MTI circuits. Such weather interference can readily be noted as a different clutter pattern on the PPI scope when viewed on normal operation. On the A-scope, certain banks of apparent targets will flutter up and down rapidly when the targets are viewed on normal operation. When on MTI, the sub-clutter will be considerably increased in the direction of the cloud, snow or other weather interference, making it appear that the MTI is out of alignment. After checking the alignment, if the condition continues, there is no remedy for it. *Do not* use the anti-jam feature to attempt to eliminate this or other type of interference unless you are actually being radar jammed.

It should be noted that, except in very unusual cases, a moving target can be readily tracked through the clutter caused by the weather conditions as the response from a moving target will normally be much greater than that received from the unusual weather formation.

(8) IMPROPER VALUE OF REGULATED VOLTAGES.

Proper MTI operation requires the regulated voltages to be accurately adjusted. Unless the voltmeter used is known to have an excellent accuracy, always double check the adjustments with a second meter, if available.

8. POWER SUPPLY PP-674A/TPS-1D.

a. TROUBLE-SHOOTING.

The power supply unit performs three separate main functions, which are provided by the following circuits:

(1) Dc power (main chassis)

(2) Power control (control chassis)

(3) Interunit connections (unit front panel)

Generally, trouble-shooting of the d-c power circuits is comparatively simple, as voltage measurements usually immediately indicate the component or portion of the circuit at fault. Also, because of the power requirements, defective components can often be spotted by definite

signs of overheating (e.g., charred resistors or leaking insulating compound). A defective filter capacitor often causes overheating of its associated filter choke. Therefore, when trouble-shooting d-c power circuits, first check for signs of overheating, then make voltage and continuity checks. The power supply schematic diagram is shown in figure 7—115, and the voltage and resistance measurements are given in figure 7—60. Component locations are given in figures 7—56, 7—61 through 7—64.

The control chassis is mounted on the upper left side of the power supply chassis (see figure 7—56). Figure 7—57 shows the relays of this chassis and their controlling circuits. Failures traced to the control chassis can be located by continuity and voltage checks. Dirty relay contacts should be cleaned by burnishing. Replace relays with badly burned contacts. If it is necessary to replace the motor of K401, make certain that the black lead of the replacement motor is connected to ground. (This motor has a permanent-magnet field, and hence, reversed polarity would cause reversed rotation, resulting in improper operation of the timing relay.)

An irregularity in the video, trigger, or d-c voltages which pass through the interconnecting circuits of the power supply could be caused by trouble in the panel interconnections of the unit. When checking for such a defect, inspect the panel receptacles for dirty or bent contacts. Also check the receptacles for conducting particles which may have inadvertently become lodged between contacts. Also, check the interconnecting circuits of the panel receptacles for continuity, grounds, or shorts.

b. ADJUSTMENTS.

(1) GENERAL.

There are three controls in the power supply unit which may require adjustment. Two controls (R416 and

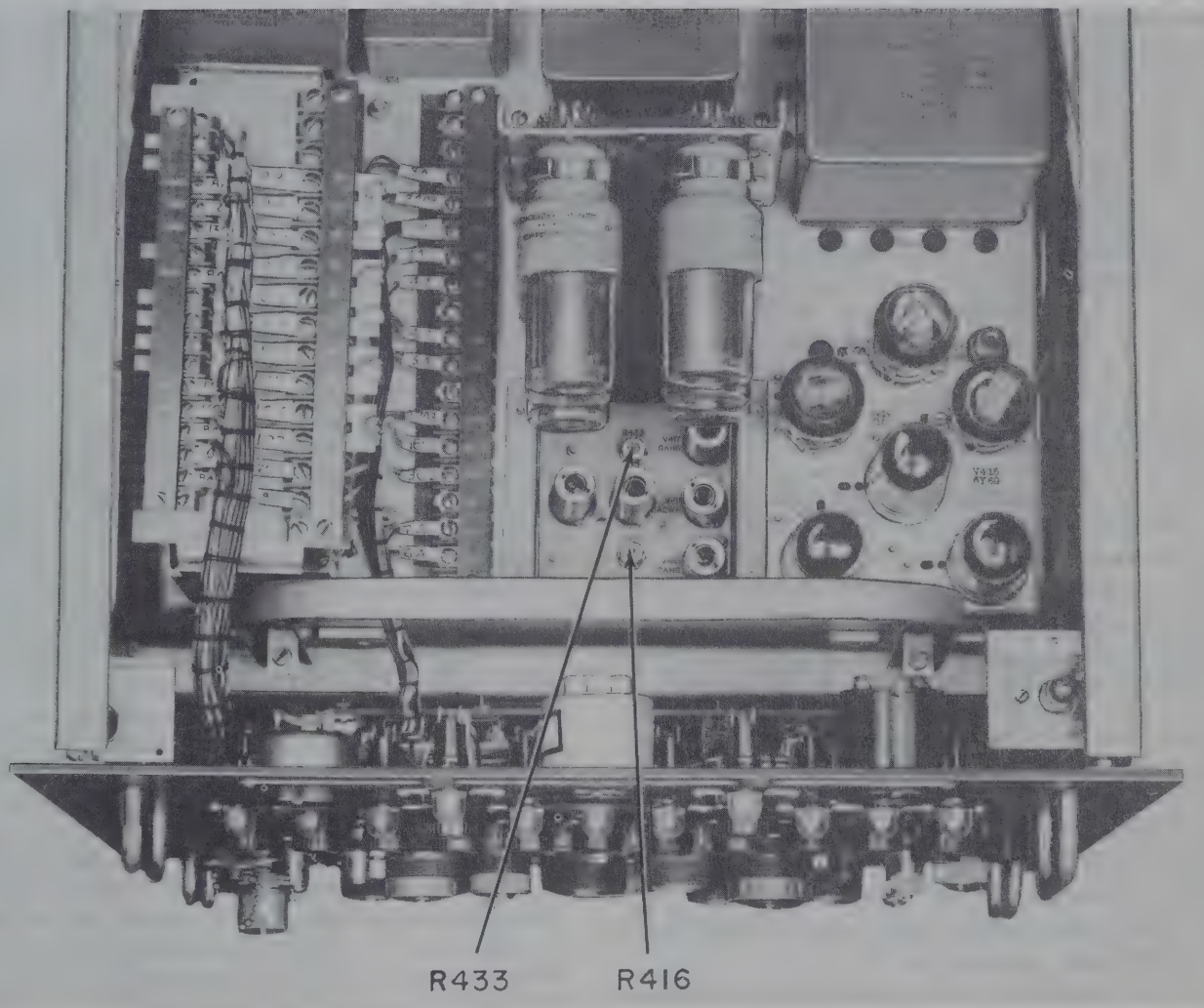

Figure 7—58. Power Supply Voltage Adjustments

R433) adjust the d-c output voltage and are located in the top center portion of the unit (see figure 7–58). Adjustment of the time duration of the timing relay, K401, is performed by R443, located on the upper left side of the unit (see figure 7–59).

These three controls should seldom require adjustment. The need for adjustment will most likely be due to aging of components or to the replacement of resistors in the circuits of the control tubes. If a considerable amount of adjustment is required of any control, or if frequent adjustment is required, check the circuit involved for a possible defective component. Make all voltage adjustments with the system in full operation.

(2) +150-VOLT SUPPLY R416.
(See figure 7–58.)

Connect the voltmeter between ground (−) and terminal 1A (+) on E401 (see figure 7–56). Unlock and adjust R416 for a reading of 150 volts; then lock R416.

(3) +300-VOLT SUPPLY R433.
(See figure 7–58.)

Connect the voltmeter between ground (−) and terminal 4A (+) on E401 (see figure 7–56). Unlock and adjust R433 for a reading of 300 volts; then lock R433.

(4) TIMING RELAY R443. *(See figure 7–59.)*

With the POWER switch off, connect a voltmeter between ground (−) and terminal 8A7 (+27.5 volts dc) on E404 (see figure 7–56). Turn the POWER switch to ON and time the period required for voltage (27.5 volts dc) to appear on the voltmeter. The period should be within 30 seconds of 5 minutes. Unlock and adjust R443 as required to correct the timing for a line voltage of 115. Clockwise rotation of R443 shortens the timing period, while the counterclockwise rotation lengthens the period. Lock R443 when the adjustment is complete. When the timing is correct, the normal voltage applied to the timer motor of K401 is approximately 4.5 volts.

9. RADAR RECEIVER-TRANSMITTER RT-212A/TPS-1D.

a. TROUBLE-SHOOTING.

(1) GENERAL.

Trouble-shooting in the receiver-transmitter unit can become somewhat involved because of the nature of the assemblies. Make every effort to accurately diagnose a fault so that no more assemblies or circuits are disturbed than is necessary. This is particularly true of the RF plumbing, which relies on extremely good electrical contact throughout for proper operation.

The circuits of the unit can be divided into two sections—receiver and transmitter.

The included receiver circuits are as follows:

(*a*) Local oscillator and control circuit U501

(*b*) Coho preamplifier

(*c*) Signal and coho mixers CR502 and CR503

(*d*) Cavities assembly RF503 (V503A and V504A)

(e) Keep-alive power supply V501

(*f*) Harmonic filter Z509

(*g*) 60-Mc IF preamplifier Z221

The transmitter circuit comprises:

(*a*) Magnetron oscillator V502

(*b*) Magnetron heater supply

(*c*) RF plumbing

(2) RECEIVER CIRCUITS. *(See figure 7–117.)*

A defective or improperly tuned local oscillator tube is usually detected by checking both the signal and the mixer crystal currents on the unit panel test meter. If low crystal current cannot be corrected by the adjustments given in paragraph *b.* below, check the d-c voltage (V505 heater) across TP501 (+) and TP502 (−). The voltage should be between 5.6 and 7.1 volts. If there is no voltage, V505 or regulator TY501 may be burned out. If the voltage is high, filter capacitor C503 may have developed high leakage.

Other oscillator voltages can be checked on E502, located adjacent to the L.O. assembly. The plate potential should be approximately 300 volts, as measured on terminal 4A (E502). The cathode voltage, as measured on terminal 7A1 (E502), should be −150 volts. Other measurements are shown in figure 7–73.

When checking the local oscillator control circuits (which effect tuning of the local oscillator), make sure that there are no mechanical faults. Tuning motor B502 is a d-c motor and may cause trouble through faulty commutation. Because of the nature of B502 (midget type), replacement rather than repair is recommended.

Signal and coho mixer failures other than faulty crystals may be caused by bent or dirty crystal contacts. Also check the coaxial cables and cable fittings of these assemblies for discontinuities and/or shorts.

Proper operation of cavities assembly RF503 is dependent, to a large extent, on good electrical contacts of all joining surfaces. Short signal mixer crystal life usually indicates a fault in this assembly. Failure of the keep-alive supply voltage to V504A also causes the same effect. Although both V504A and V503A ((6322's) may have had but a few hours' usage, do not overlook the possibility of a defective 6322. The contact surfaces of RF503, V503A, and V504A can be cleaned with carbon tetrachloride *if* the surfaces are finally polished with a clean, dry, lintless cloth.

Voltage and resistance measurements of the keep-alive supply of V501 should show the location of any faults in the keep-alive supply. Do not overlook the 1-meg resistor of assembly E506 in the cap connection of V504A (see figure 7–73).

The nature of harmonic filter Z509 is such that failures attributed to this assembly are most likely to be caused by poor contacts of the input and output coaxial fittings, P/J513 and P/J512. A defect within the filter causes poor signals and/or frequent signal crystal failures, replacement then being necessary. Only after all other possibilities of the cause of such a defect have been definitely eliminated should Z509 be replaced.

A defect in IF preamplifier assembly Z221 obviously

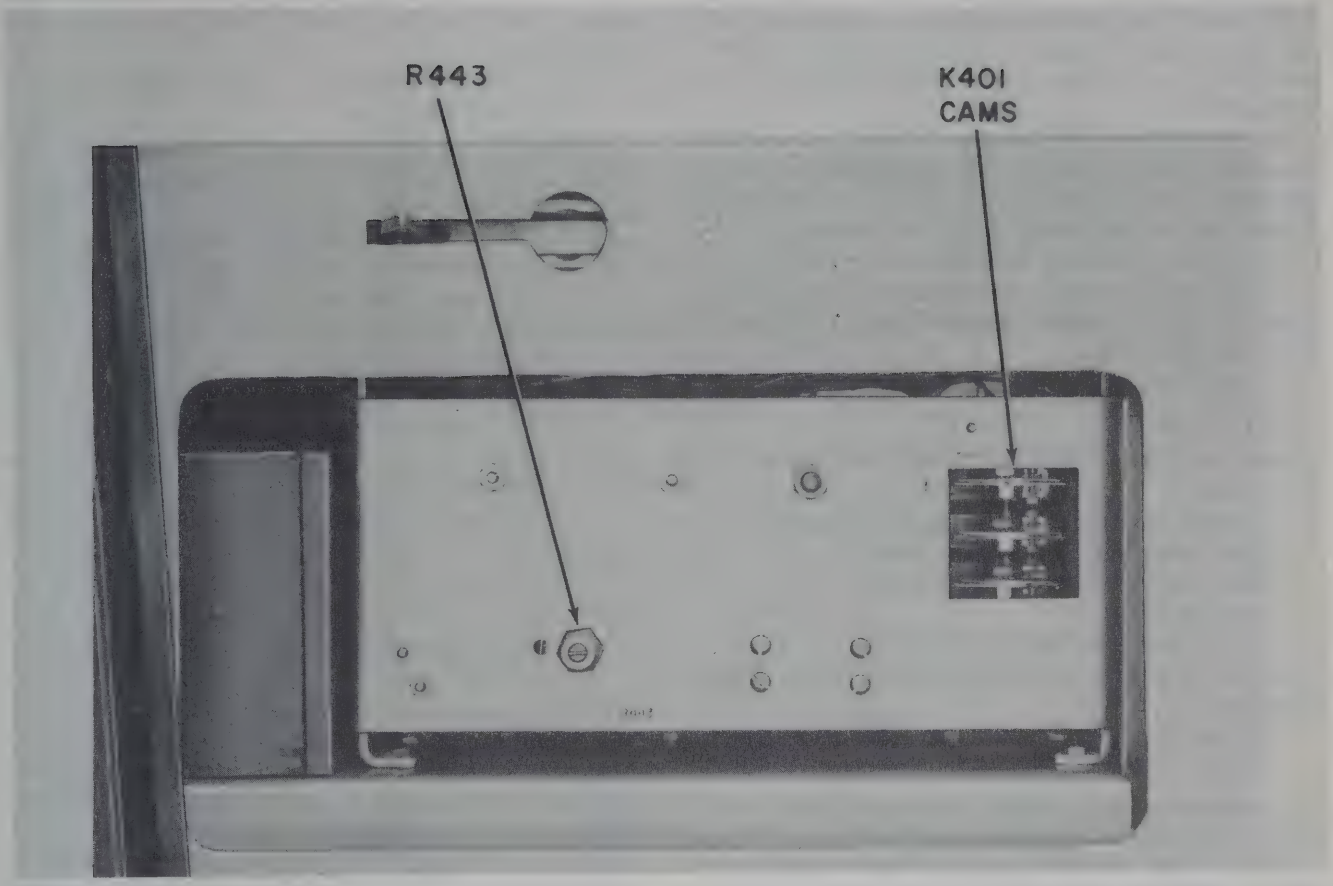

Figure 7—59. Power Supply Timing Relay Adjustment

will affect the reception of radar signals. One indication which points to a defect in Z221 is a poor signal-to-noise ratio. This defect is most easily detectable when MTI reception is in use. If the signal-to-noise ratio is low, it usually is difficult to obtain adequate moving-target signal detection (A scope) above the grass level. However, this condition can be caused by poor adjustment, a poor signal mixer crystal, arcing, poor contacts in the RF coaxial system connectors, etc.

If tube replacement (V222 through V225) does not cure the defect, tube socket voltage and resistance measurements of the Z221 assembly should be made (as shown in figure 7—73). The tube socket adapters (Case CY-1060/TPS-1D) can be used for these measurements. If no defect is detected, bandwidth and gain checks should then be made as given in paragraph 9.*b.*(2)(*e*). For component locations, see figures 7—74 through 7—81.

(3) TRANSMITTER CIRCUITS.
(See figure 7—117.)

The two panel meters of the receiver-transmitter unit permit a quick check of the magnetron (V502) circuit for the presence of heater voltage and video pulse voltage. The V502 filament voltage (dc obtained from the rectifier circuit of CR501) is measured at the output of CR501; therefore, in the event of no magnetron current and a cold magnetron, check the heater circuit (includes T502, R515, etc.) for continuity as well as checking V502 for an open heater. Most of the other faults possible in the magnetron circuit cause protective relay K151A/B in the radar modulator (see figure 7—18) to operate and thus remove video power. See Section 2, paragraph 2.*b.* for transmitter circuit faults which cause operation of K151A/B.

Again the necessity of maintaining good contacts throughout the transmitter circuits is emphasized. Remember that, in general, circuits which carry high power more readily develop heat and subsequent damage at a point of poor contact than do low-powered circuits. Therefore, immediately investigate any noticeable signs of arcing other than the occasional light sputter normally heard in the transmitter. A light sputter occurring at an average of not more than once every five seconds is permissible.

When investigating an arcing condition, check such points as the output connector of V502 and all RF fittings between the output connector and the antenna.

If replacement of a magnetron does not correct a condition, do not hesitate to try a second replacement. It is assumed that all replacement magnetrons are properly aged, as given under paragraph 9.*b*.(3)(*b*) below, and that other possible causes of trouble have been investigated.

In connection with transmitter circuits, proper MTI operation is dependent, to a large degree, on proper operation of the transmitter. It therefore follows that a check of the transmitter should be made along with other checks if difficulty is encountered with MTI.

Voltage and resistance measurements are given in figure 7–73. Component locations appear in figures 7–74 through 7–81.

b. ADJUSTMENT AND CHECK PROCEDURES.

(1) GENERAL.

Receiver circuits which have tuning adjustments are as follows:

Cavities assembly RF503 (three adjustments)
Coho mixer RF502 (L.O. coupling)
Signal mixer CR503 (L.O. coupling)
Local oscillator
I.F. preamplifier (one adjustment)

The transmitter has but one adjustment: transmitter frequency.

(2) RECEIVER.

(*a*) CAVITIES ASSEMBLY RF503.

Adjustment of this assembly is necessary if the transmitter frequency is changed, or if V503A or V504A (6322's) is replaced. A slight readjustment may be necessary as V503A or V504A ages.

To tune RF503, proceeds as follows:

1. Pull the unit out of its case as far as the stops allow.

2. Open the hinged access door beneath the unit as shown in figure 6–10.

3. Energize the complete equipment, allowing at least a 30-minute warm-up.

WARNING

Keep clear of all circuits other than those available through the access door. High-voltage pulses are present above the chassis.

4. Stop the antenna on a small, distant, fixed target.

5. Adjust the tuning knob of, first, V503A, and then, V504A for maximum brightness of the distant target on the PPI or for maximum width and/or amplitude of A-scope signal (see figure 7–65).

6. Repeat step *5*. until it is certain that no further improvement in signal strength can be obtained.

7. Loosen the two clamps which hold RF503 to the coaxial line, RF501 (see figure 7–65).

8. Slowly slide the RF503 assembly in either direction on RF501 so as to produce maximum scope signals as above.

9. Securely tighten the RF503 clamps to RF501.

10. Shut down the equipment, and close and secure the access door before sliding the chassis back into the unit case.

(*b*) COHO MIXER – LOCAL OSCILLATOR COUPLING.

Adjustment of this coupling is necessary if the coho mixer crystal current does not give a red-line reading on the receiver-transmitter panel TEST METER (TEST SELECTOR at COHO) and also when crystal CR502 is replaced. The adjustment procedure is as follows:

1. Prepare the equipment as in steps (*a*)*1*.–(*a*)*4*. directly above, observing the warning.

2. Loosen the knurled ring-nut which locks the coupling adjustment (see figure 7–65).

3. Turn the coupling adjustment so as to obtain a red-line reading for coho crystal current on the panel TEST METER.

4. Lock the adjustment and shut down the equipment.

5. Secure the access door before sliding the chassis into its case.

(*c*) SIGNAL MIXER – LOCAL OSCILLATOR COUPLING.

If the signal mixer current is not on the red line of the receiver-transmitter panel TEST METER (TEST SELECTOR at SIG) this coupling adjustment should be made. Adjustment is usually necessary when the mixer crystal, CR503, is replaced. The adjustment procedure is the same as for the coho mixer given in (*b*) directly above. The location of the adjustment is given in figure 7–65. *Be sure to observe the high-voltage warning.*

(*d*) LOCAL OSCILLATOR TUNING.

Local oscillator tuning is normally accomplished as an operating adjustment (see Section 4, paragraph 3.*c*.). However, if there is a great difference in crystal currents between the operating frequency extremes (1220 and 1350 Mc), adjustment of the cathode-tuned circuit is necessary. Once this has been done for one particular local oscillator tube, it is unlikely to be required again until the local oscillator tube is replaced.

The cathode tuning adjustments affect mainly the RF output of the oscillator. As the cathode circuit is broadband, setting its frequency to approximately the center frequency of its normal operating range (1280-1410 Mc) provides adequate output for the entire operating frequency band.

The procedure for adjustment is as follows:

1. With the receiver-transmitter chassis pulled out as far as the catches, open the hinged portion of the bottom shield (see figure 6–10).

2. Remove P510 from J510 on coho mixer RF502, and connect P510 to the Tuned Cavity TS-172B/UP input cable through the AN-to-BNC adapter (2 fittings) furnished (female: jack-to-jack).

3. Warm up the equipment for 30 minutes.

4. Set the TS-172B/UP to 1345 Mc.

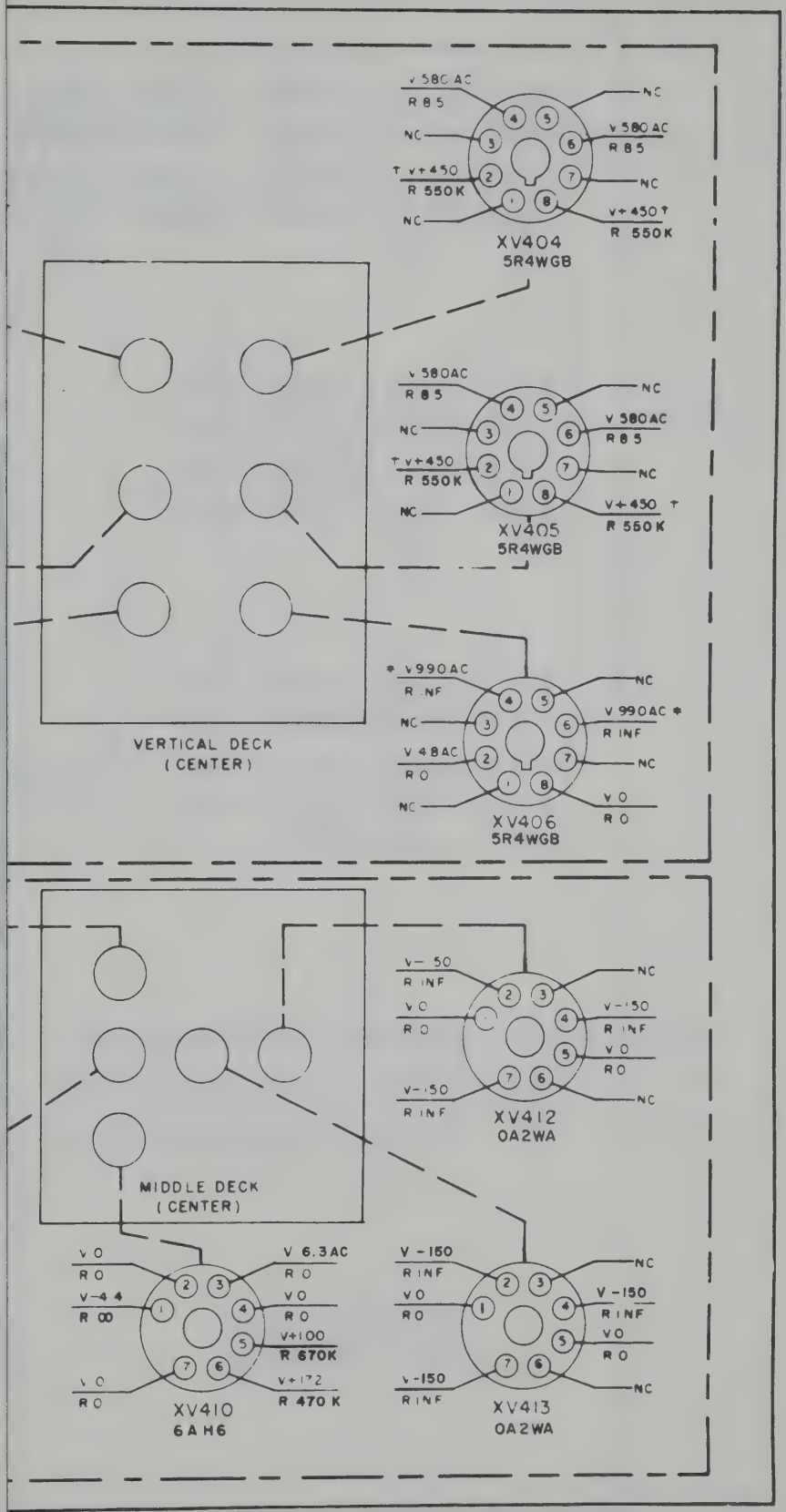

Figure 7–60. Power Supply Voltage and Resistance Measurements

If replacement of a magnetron does not correct a condition, do not hesitate to try a second replacement. It is assumed that all replacement magnetrons are properly aged, as given under paragraph 9.*b*.(3)(*b*) below, and that other possible causes of trouble have been investigated.

In connection with transmitter circuits, proper MTI operation is dependent, to a large degree, on proper operation of the transmitter. It therefore follows that a check of the transmitter should be made along with other checks if difficulty is encountered with MTI.

Voltage and resistance measurements are given in figure 7–73. Component locations appear in figures 7–74 through 7–81.

b. ADJUSTMENT AND CHECK PROCEDURES.

(1) GENERAL.

Receiver circuits which have tuning adjustments are as follows:

Cavities assembly RF503 (three adjustments)
Coho mixer RF502 (L.O. coupling)
Signal mixer CR503 (L.O. coupling)
Local oscillator
I.F. preamplifier (one adjustment)

The transmitter has but one adjustment: transmitter frequency.

(2) RECEIVER.

(*a*) CAVITIES ASSEMBLY RF503.

Adjustment of this assembly is necessary if the transmitter frequency is changed, or if V503A or V504A (6322's) is replaced. A slight readjustment may be necessary as V503A or V504A ages.

To tune RF503, proceeds as follows:

1. Pull the unit out of its case as far as the stops allow.

2. Open the hinged access door beneath the unit as shown in figure 6–10.

3. Energize the complete equipment, allowing at least a 30-minute warm-up.

WARNING

Keep clear of all circuits other than those available through the access door. High-voltage pulses are present above the chassis.

4. Stop the antenna on a small, distant, fixed target.

5. Adjust the tuning knob of, first, V503A, and then, V504A for maximum brightness of the distant target on the PPI or for maximum width and/or amplitude of A-scope signal (see figure 7–65).

6. Repeat step *5*. until it is certain that no further improvement in signal strength can be obtained.

7. Loosen the two clamps which hold RF503 to the coaxial line, RF501 (see figure 7–65).

8. Slowly slide the RF503 assembly in either direction on RF501 so as to produce maximum scope signals as above.

9. Securely tighten the RF503 clamps to RF501.

10. Shut down the equipment, and close and secure the access door before sliding the chassis back into the unit case.

(*b*) COHO MIXER – LOCAL OSCILLATOR COUPLING.

Adjustment of this coupling is necessary if the coho mixer crystal current does not give a red-line reading on the receiver-transmitter panel TEST METER (TEST SELECTOR at COHO) and also when crystal CR502 is replaced. The adjustment procedure is as follows:

1. Prepare the equipment as in steps (*a*)*1*.–(*a*)*4*. directly above, observing the warning.

2. Loosen the knurled ring-nut which locks the coupling adjustment (see figure 7–65).

3. Turn the coupling adjustment so as to obtain a red-line reading for coho crystal current on the panel TEST METER.

4. Lock the adjustment and shut down the equipment.

5. Secure the access door before sliding the chassis into its case.

(*c*) SIGNAL MIXER – LOCAL OSCILLATOR COUPLING.

If the signal mixer current is not on the red line of the receiver-transmitter panel TEST METER (TEST SELECTOR at SIG) this coupling adjustment should be made. Adjustment is usually necessary when the mixer crystal, CR503, is replaced. The adjustment procedure is the same as for the coho mixer given in (*b*) directly above. The location of the adjustment is given in figure 7–65. *Be sure to observe the high-voltage warning.*

(*d*) LOCAL OSCILLATOR TUNING.

Local oscillator tuning is normally accomplished as an operating adjustment (see Section 4, paragraph 3.*c*.). However, if there is a great difference in crystal currents between the operating frequency extremes (1220 and 1350 Mc), adjustment of the cathode-tuned circuit is necessary. Once this has been done for one particular local oscillator tube, it is unlikely to be required again until the local oscillator tube is replaced.

The cathode tuning adjustments affect mainly the RF output of the oscillator. As the cathode circuit is broadband, setting its frequency to approximately the center frequency of its normal operating range (1280-1410 Mc) provides adequate output for the entire operating frequency band.

The procedure for adjustment is as follows:

1. With the receiver-transmitter chassis pulled out as far as the catches, open the hinged portion of the bottom shield (see figure 6–10).

2. Remove P510 from J510 on coho mixer RF502, and connect P510 to the Tuned Cavity TS-172B/UP input cable through the AN-to-BNC adapter (2 fittings) furnished (female: jack-to-jack).

3. Warm up the equipment for 30 minutes.

4. Set the TS-172B/UP to 1345 Mc.

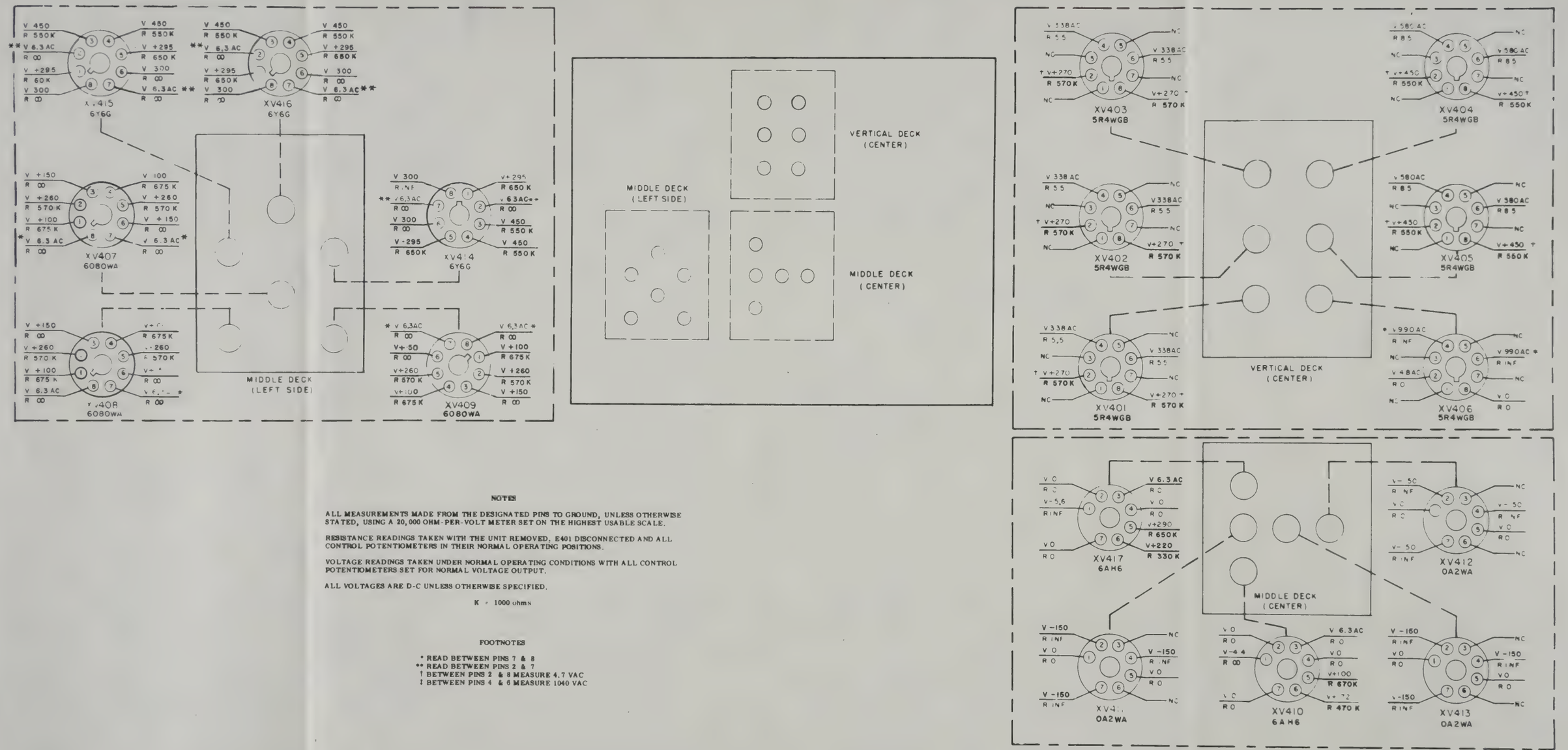

NOTES

ALL MEASUREMENTS MADE FROM THE DESIGNATED PINS TO GROUND, UNLESS OTHERWISE STATED, USING A 20,000 OHM-PER-VOLT METER SET ON THE HIGHEST USABLE SCALE.

RESISTANCE READINGS TAKEN WITH THE UNIT REMOVED, E401 DISCONNECTED AND ALL CONTROL POTENTIOMETERS IN THEIR NORMAL OPERATING POSITIONS.

VOLTAGE READINGS TAKEN UNDER NORMAL OPERATING CONDITIONS WITH ALL CONTROL POTENTIOMETERS SET FOR NORMAL VOLTAGE OUTPUT.

ALL VOLTAGES ARE D-C UNLESS OTHERWISE SPECIFIED.

K = 1000 ohms

FOOTNOTES

* READ BETWEEN PINS 7 & 8
** READ BETWEEN PINS 2 & 7
† BETWEEN PINS 2 & 8 MEASURE 4.7 VAC
‡ BETWEEN PINS 4 & 6 MEASURE 1040 VAC

Figure 7–60. Power Supply Voltage and Resistance Measurements

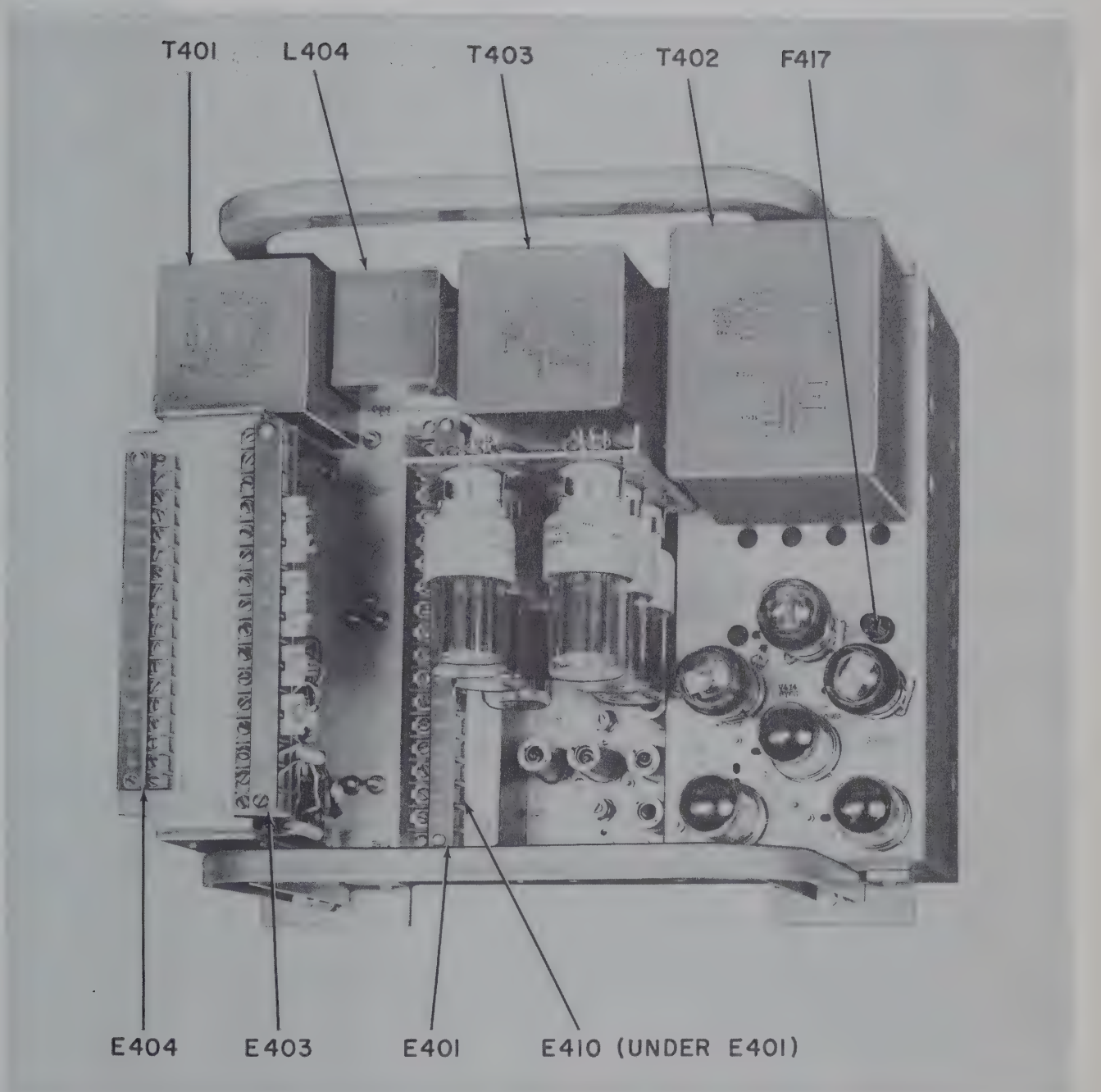

Figure 7–61. Power Supply Component Locations (Top Side)

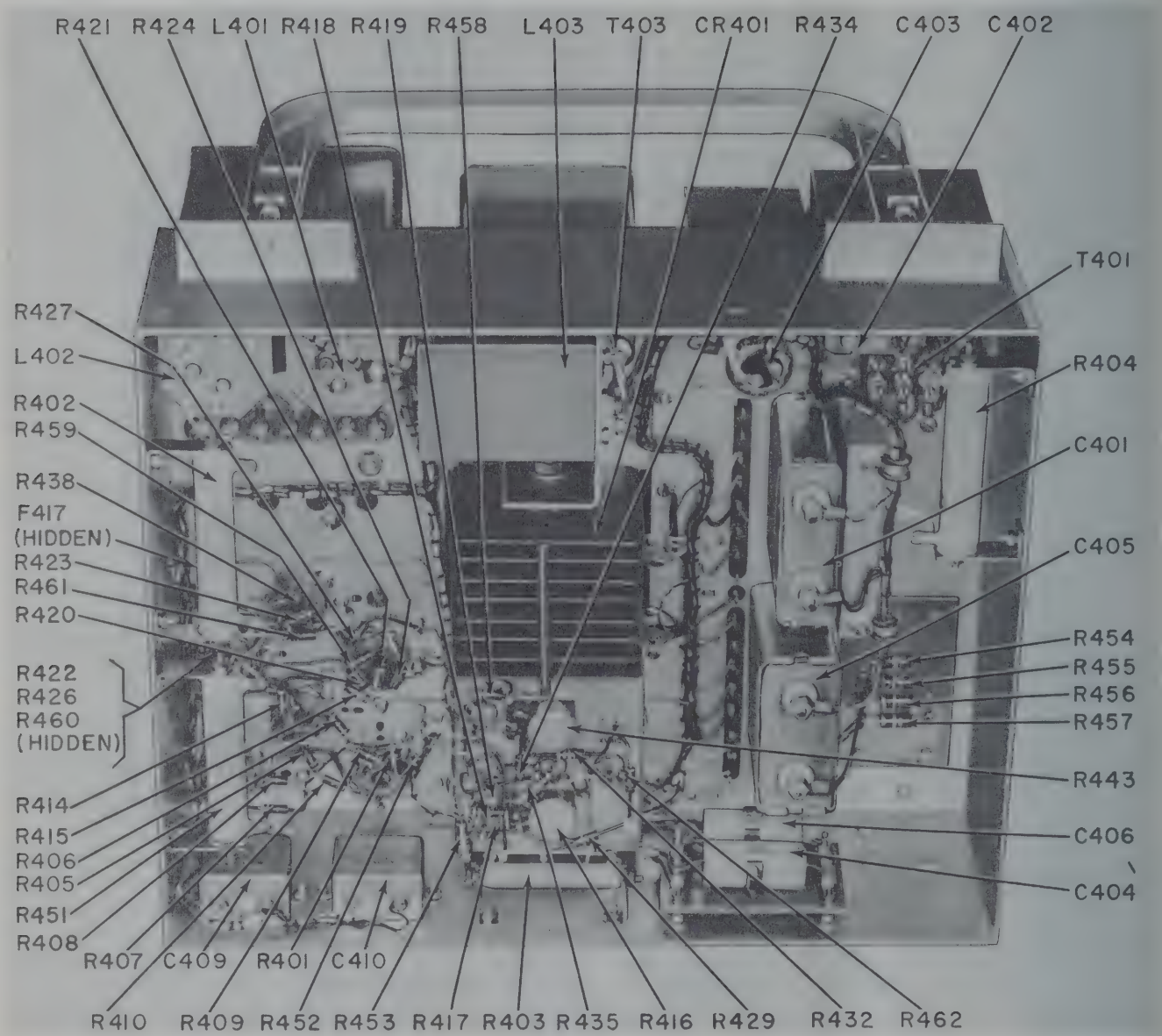

Figure 7—62. Power Supply Component Locations (Bottom Side)

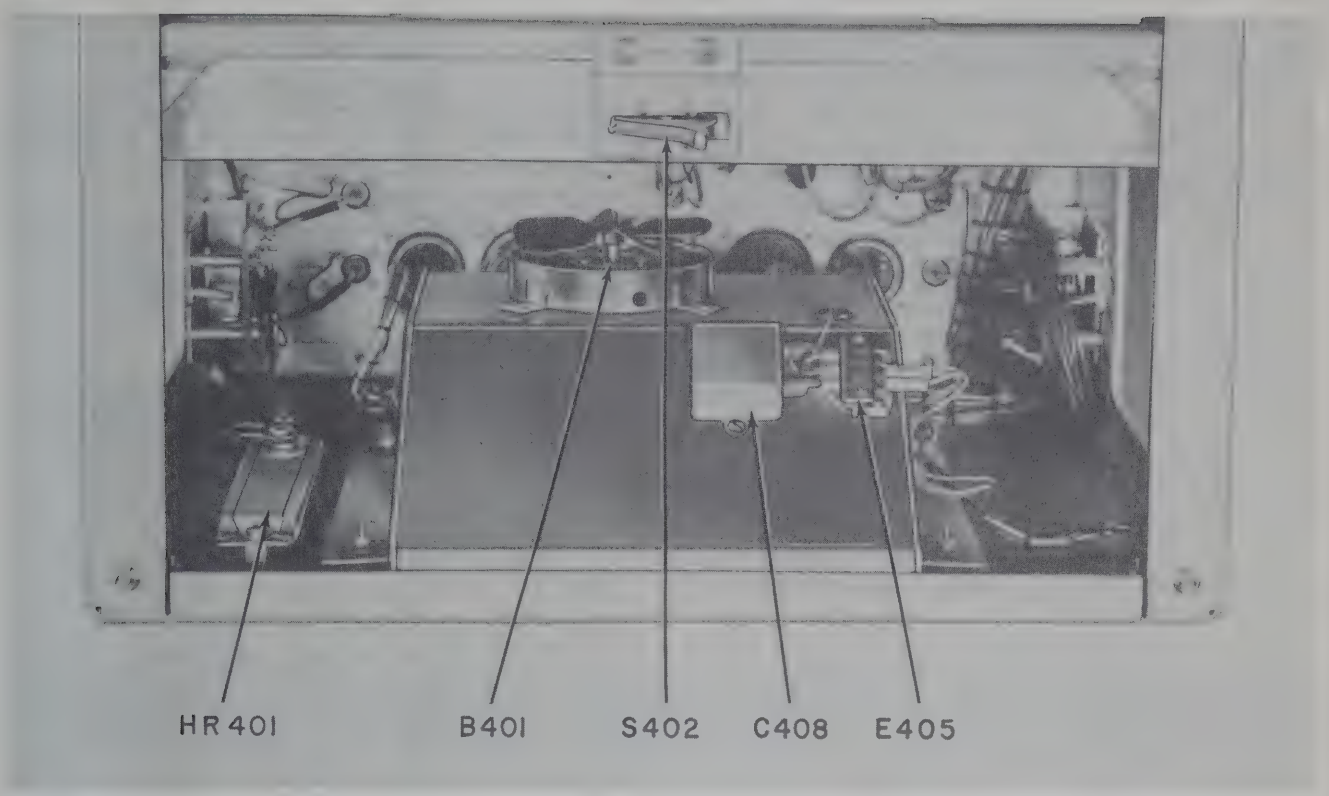

Figure 7—63. Power Supply Component Locations (Rear)

5. On the indicator, tune the local oscillator, with the L.O. MOTOR switch, to the TS-172B/UP frequency, using the TS-172B/UP meter for indication.

6. Adjust the coho signal mixer—local oscillator coupling adjustments for a red-line reading as given in paragraph 9.*b.*(2)(*b*) and (*c*) above.

7. On the socket end of local oscillator V505, adjust one or more of the cathode circuit tuning controls so as to obtain maximum crystal current (see figure 7—65).

8. Check the crystal current at both 1280 and 1410 Mc, using the TS-172B/UP for setting the frequency.

9. If approximately the same crystal current indication is obtained at both frequencies, no further adjustment of the local oscillator is necessary.

10. If there is a crystal current difference of more than the equivalent of one half of the red-line deflection (more than one fourth of full scale), adjust the cathode circuit tuning controls slightly so as to obtain approximately the same crystal current at 1280 and 1410 Mc.

11. Adjust the local oscillator alignment as given in Section 4, paragraph 3.*c*.

12. Adjust the coho and signal mixer currents for red-line readings as given in paragraphs 9.*b.*(2)(*b*) and (*c*) above.

(*e*) CHECKING BANDWIDTH AND GAIN OF 60-MC PREAMPLIFIER Z221.

Before making these checks, it is assumed that tube checks and circuit voltages and resistance measurements have been made, as well as continuity and short checks of the input and output cables.

Test equipment required:

Signal Generator TS-452/U
Mixer simulator (see figure 7—66)
Special coaxial lead (see figure 7—67)
Special adapter (see figure 7—67)
UG-274/U T connector
UG-290/U connector (with short leads for connection to TS-452/U traveling detector probe)

1. BANDWIDTH CHECK.

a. Pull the receiver-transmitter chassis out of its case as far as the chassis stops.

b. On the underside of the chassis, open the hinged access door as for tuning (see figure 6—10).

c. Connect the output cable of the TS-452/U to the input of the mixer simulator.

d. Connect the output of the mixer simu-

lator to the input jack, J224, of the preamplifier, Z221, by means of the special coaxial lead (see figure 7—38).

e. Remove the output plug (P227) from J227 of the preamplifier, connect the UG-274/U T connector to J227, and then connect P227 into one branch of the T connector (see figure 7—67).

f. Connect the traveling detector probe to the UG-290/U clip leads, and connect the probe cable to the TS-452/U vertical amplifier input.

g. Connect the UG-290/U connector (with probe attached) to the remaining branch of the UG-274/U T connector.

h. On the TS-452/U, install the 45—100-Mc oscillator coil, cut in all of the attenuation, and plug the power cable into J409 of the power supply unit.

i. Warm up the equipment with no radiation for 10 to 15 minutes.

j. Adjust the TS-452/U amplifier gain to about 3/4 full.

k. Cut out attenuator steps to obtain a pattern about 1/2 of the diameter of the scope.

Note

If the pattern shows signs of being limited in amplitude, increase the vertical amplifier gain and add more attenuation.

l. Adjust the scope so that the pattern nearly fills the center of the scope.

m. Temporarily cut in 3 db more of attenuation so as to calibrate the scope at the —3-db level.

n. Using the TS-452/U wavemeter marker, measure the center frequency and bandwidth at the —3-db points. The scope pattern should be essentially that of figure 7—68, with a bandwidth of 4 ± 0.75 Mc and a center frequency of 60 ± 1 Mc.

o. Adjust C240 in the preamplifier if necessary to obtain proper characteristics before checking gain as given in the procedure which follows.

Note

Adjustment of C240 affects the noise figure of the receiver. After completing the bandwidth and gain measurements, readjust C240 for best signal to noise ratio, following the procedure given below.

p. Stop the antenna on a small, distant, fixed target.

q. If signals are saturated, reduce RECEIVER GAIN on indicator until signals are below saturation. Set the OPERATION SELECTOR on the signal comparator to REMOTE and the OPERATION selector on the indicator to NORMAL VIDEO.

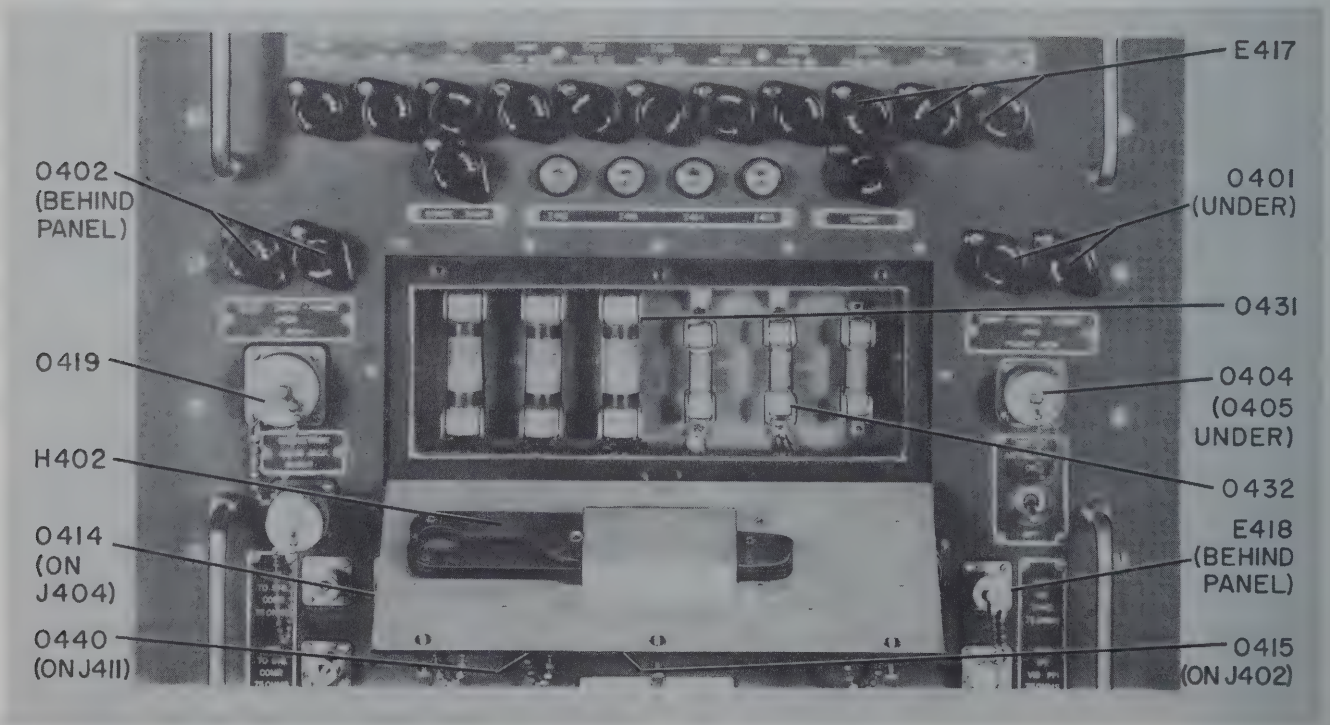

Figure 7—64. Power Supply Component Locations

r. Adjust C240 for best signal to noise ratio as viewed on A-scope.

Note

Do not adjust C240 for maximum signal alone, but rather for best signal to noise ratio.

2. GAIN CHECK.

a. To measure the preamplifier gain, first log the amount of attenuation cut in, and also log the height of the IF preamplifier scope pattern resulting from the alignment check given directly above.

b. Connect the special adapter (see figure 7—38) in place of the mixer simulator on the end of the TS-452/U output cable.

c. Disconnect the traveling detector probe from the UG-290/U connector, and connect the probe to the output of the special adapter.

d. Cut in attenuation until the amplitude of the scope pattern is the same as that of the IF preamplifier.

e. Subtract the amount of attenuation in the circuit from the value logged in step a. above. This is the gain of the amplifier; the figure should be 49 ± 3 db.

f. Shut down the equipment, disconnect the test equipment, and restore the AN/TPS-1G to normal operating condition.

(3) TRANSMITTER.

(*a*) FREQUENCY.

When first setting up the AN/TPS-1G equipment, it is necessary to set the transmitter frequency (magnetron frequency) to some point in the 1220—1350-Mc operating frequency band. If there is a possibility of interference with other radars operating in the same frequency range, the transmitter frequency should be set at least 150 Mc away from other radar operating frequencies. Otherwise, any random frequency may be chosen, usually a mid-band frequency.

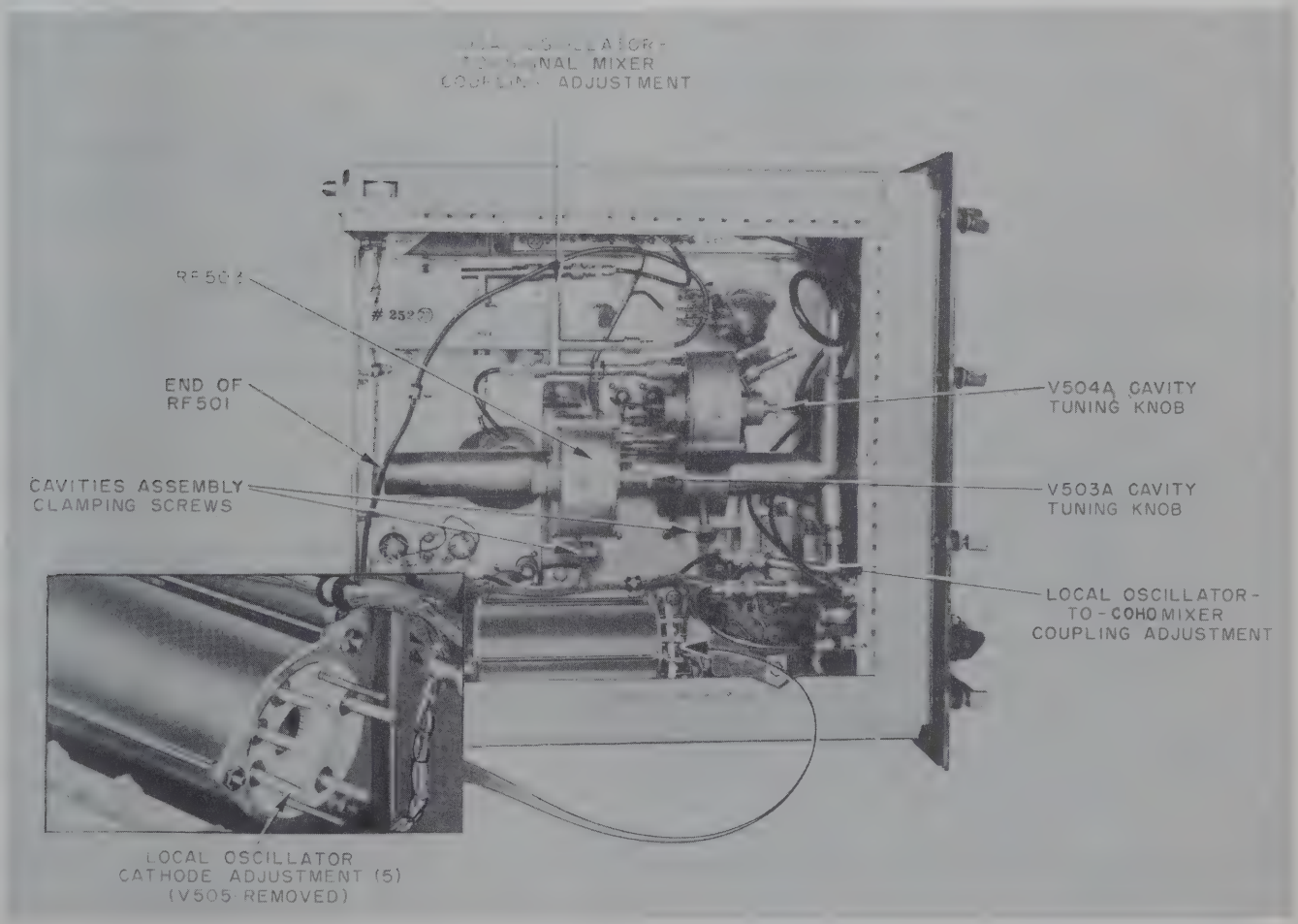
ADJUSTMENT
END OF RF501
V504A CAVITY TUNING KNOB
CAVITIES ASSEMBLY CLAMPING SCREWS
V503A CAVITY TUNING KNOB
LOCAL OSCILLATOR - TO - COHO MIXER COUPLING ADJUSTMENT
LOCAL OSCILLATOR CATHODE ADJUSTMENT (5) (V505 REMOVED)

Figure 7—65. Receiver-Transmitter Adjustments

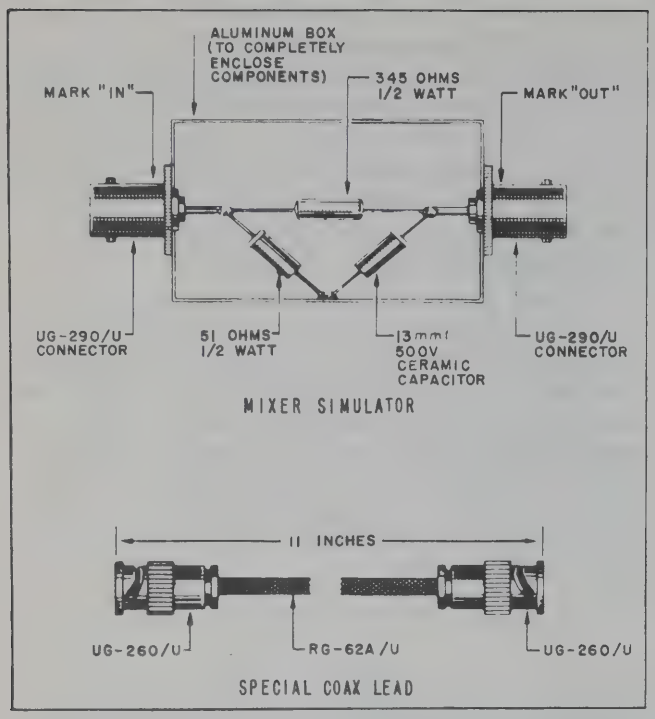

Figure 7—66. Mixer Simulator and Special Coaxial Lead

When the magnetron oscillator tube, V502, is replaced, as given in Section 6, paragraph 7.*c.*, it is necessary to accurately set the transmitter frequency to the original frequency. Also, it is sometimes necessary to change the transmitter operating frequency in order to minimize interference with other radars.

If the AN/TPS-1G equipment is operated with the antenna installed remotely, precautions must be taken, when tuning the transmitter frequency, to avoid mode-skipping of the magnetron. (See Section 2, paragraph 3.*c.*) Mode-skipping becomes increasingly more prevalent as the RF coaxial line exceeds 90 feet in length, and hence, correspondingly more care must be taken in setting the transmitter frequency.

Magnetron mode-skipping causes the signals seen on the A scope to have a cobweb appearance, which is particularly noticeable in normal radar operation. With MTI it may be impossible to balance out fixed targets or fixed targets may appear intermittently with ghost-like appearance. If this effect is experienced after setting the transmitter frequency and tuning up the receiver, shift the transmitter frequency 10 to 20 Mc so as to locate a stable operating point. Do not shift the frequency too far, since another point of mode-skipping may be encountered.

Occasionally a magnetron tube may double-mode or "FM" at a particular point in the operating frequency band, whether the antenna is mounted on the tower assembly or mounted remotely. The effect produced at the A scope is the same as for mode-skipping. Likewise, the condition may be corrected by changing magnetron frequency. If it is difficult to find any point that provides stable operation, the magnetron may be at fault.

A defective local oscillator tube may also cause somewhat the same defect as double-moding, etc. Careful observation of the magnetron and crystal current meters for a minute unsteadiness may indicate which tube is at fault.

To adjust the transmitter frequency, proceed as follows:

1. Connect Tuned Cavity TS-172B/UP to RF TEST jack J501 on the receiver-transmitter.

2. Energize the equipment and allow the magnetron to warm up for at least 15 minutes after applying plate power.

Note

If the magnetron has been replaced, undoubtedly it will be necessary to age the replacement magnetron before the transmitter frequency can be set. (See paragraph 9.*b.*(3)(*b*).)

3. Set the frequency of Tuned Cavity TS-172B/UP (echo box) to the desired operating frequency.

Note

If tuning because of magnetron replacement, set frequency to original operating frequency. If frequency is being changed, set frequency to new operating frequency, keeping within the 1220-to-1350-Mc frequency band.

It has been found from experience that stable operation, free from arc-over in the magnetron, is considerably aided by raising the magnetron voltage slowly

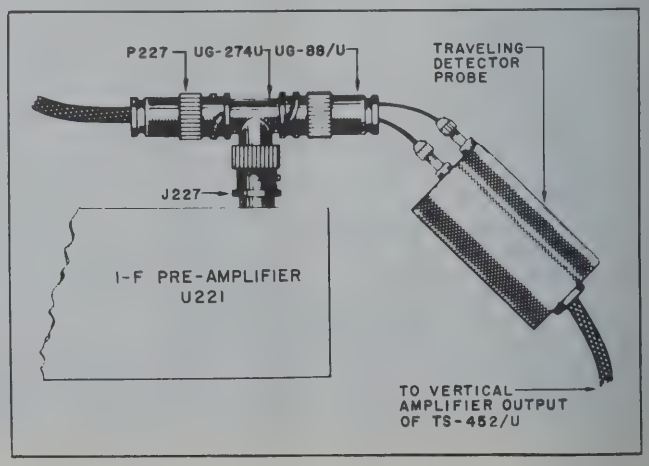

Figure 7—67. 60-Mc IF Preamplifier Test Connections

during its run-in period. Considerably improved performance and life will result from the use of the MAGNETRON AGING VARIAC (modulator) before final application of full power. A limited number of arc-overs will not cause the overload relay to cut magnetron operation, and will produce reasonable results when viewing the NORMAL VIDEO display. However, such arc-overs produce a disturbing effect when viewing the GATED MTI display.

It is known that some magnetrons continue to produce a disturbing number of arc-overs (in MTI condition), even after proper aging, when operated in the range 1220—1250 megacycles. It is generally unnecessary to operate in this frequency range, and if such a magnetron is encountered, frequency of operation should be raised to approximately the middle of the band or any convenient frequency higher than 1250 megacycles. A complete frequency alignment of the system should be effected. It then will be found that stable operation may be readily achieved.

4. Carefully tune the MAGNETRON TUNING control on the receiver-transmitter to the frequency setting of the echo box. (See TS-172B/UP Instruction Book, NAVSHIPS 92920.)

5. Tune in signals on the indicator A-scope as given in Section 4, paragraph 3.*c.*, steps (4) through (11).

6. Adjust coho and signal mixer current, if necessary, as given in paragraph 9.*b*(2)(*b*) and (*c*).

7. Tune the cavities assembly as given in paragraph 9.*b*.(2)(*a*) of this section.

Note

If the signals seen on the A scope have a cobweb appearance, indicating a possible unstable magnetron frequency, adjust the transmitter to a new frequency by repeating steps *3* through 7.

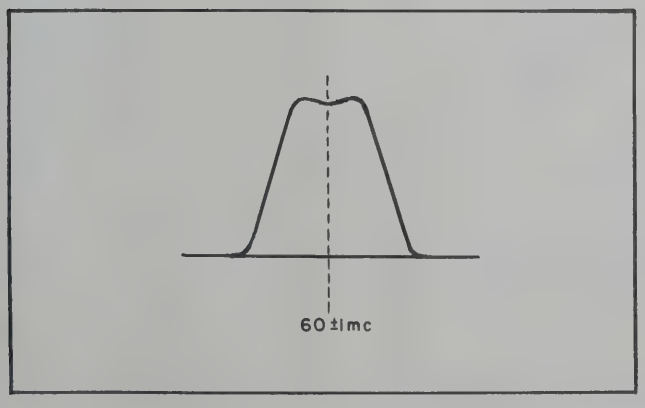

Figure 7—68. 60-Mc IF Preamplifier Alignment Pattern

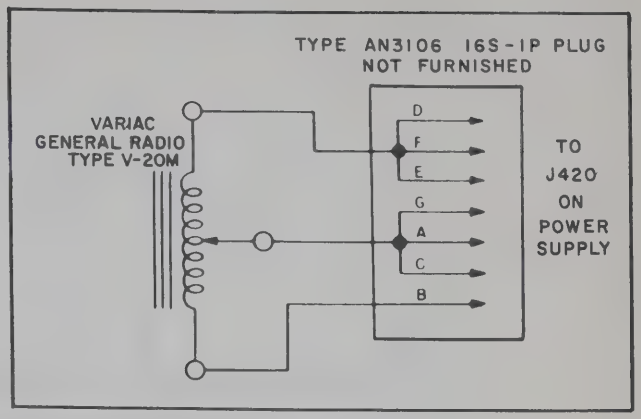

Figure 7—69. Variac Connections for Aging Magnetron

Certain magnetrons may exhibit a phenomenon kown as noise rings. These rings appear on the PPI display as circular lines (either one or more) of varying widths and intensities, generally in the range from 5 to 7 miles. Usually the noise ring appears as a circle with poorly defined edges about one-tenth of a mile in range depth. Occasionally, however, the noise ring may be very sharply defined, of less width than a range ring. On the other hand, noise rings as wide as one-quarter mile in range depth sometimes occur; these are usually of a milky character and relatively low intensity. Although noise rings generally occur singly, occasionally a combination of various types may be seen.

In general, noise rings do not interfere with the operational tracking of targets. However, significant noise rings, if present, may be greatly attenuated and usually eliminated by one of the methods given below.

8. Changing frequency by 20 megacycles or more (careful frequency alignment of the entire system should be made).

9. The direction of the magnetic field with respect to the axis of the magnetron cathode has a significant effect on noise rings. By loosening the magnetron in its holder and rotating it slightly (only a small amount of rotation is possible), the character of the noise ring will be altered markedly. In general, it is possible to find a position which completely eliminates the noise ring.

10. When satisfactory operation is obtained, log the transmitter frequency and also the setting of the MAGNETRON TUNING control.

Note

It is suggested that a tag be attached to the receiver-transmitter unit with this information so that, in the event that the tuning control is inadvertently turned during operation, the control can be easily reset to its operating position.

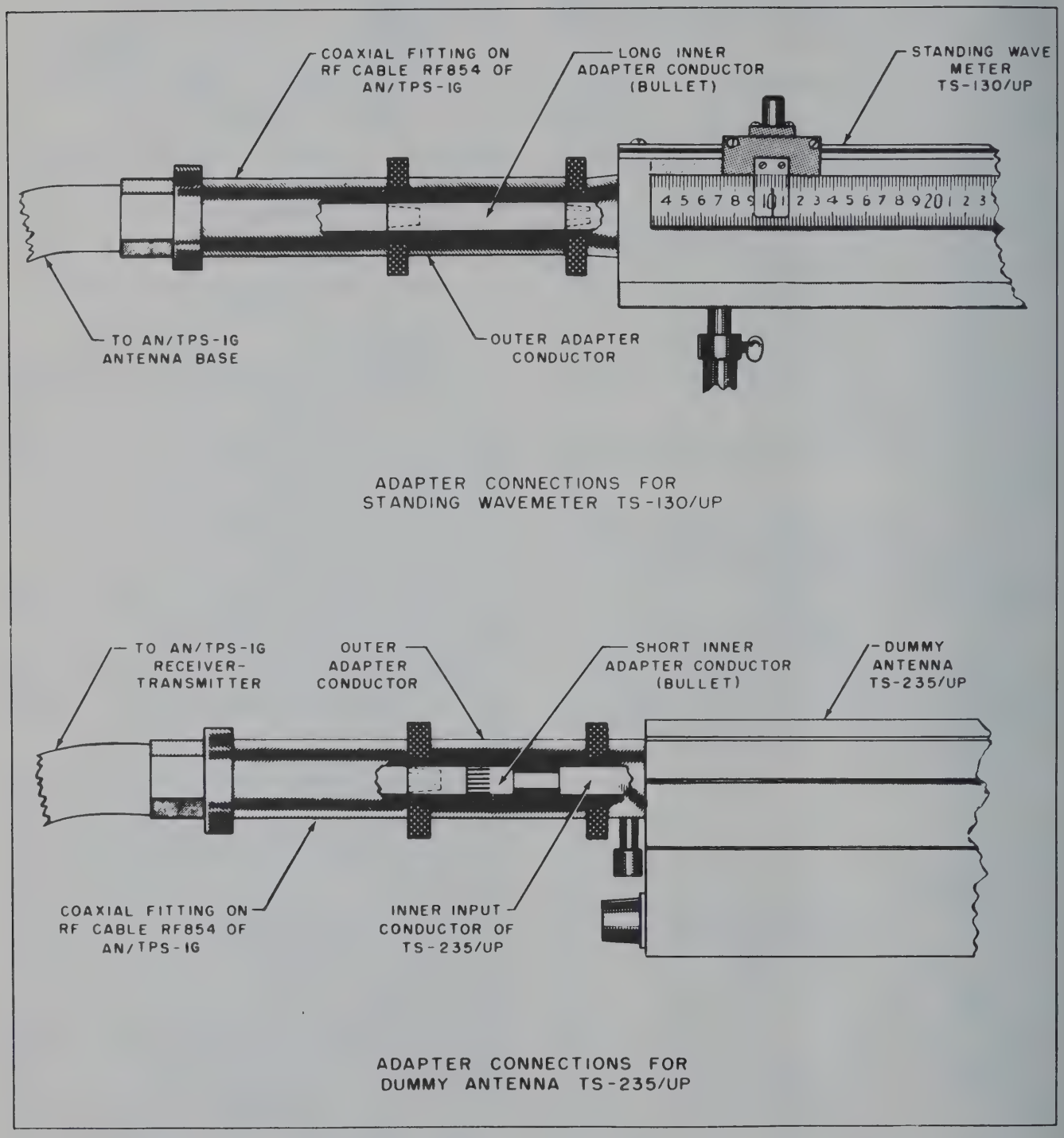
COAXIAL FITTING ON RF CABLE RF854 OF AN/TPS-1G
LONG INNER ADAPTER CONDUCTOR (BULLET)
STANDING WAVE METER TS-130/UP
TO AN/TPS-1G ANTENNA BASE
OUTER ADAPTER CONDUCTOR
ADAPTER CONNECTIONS FOR STANDING WAVEMETER TS-130/UP
TO AN/TPS-1G RECEIVER-TRANSMITTER
OUTER ADAPTER CONDUCTOR
SHORT INNER ADAPTER CONDUCTOR (BULLET)
DUMMY ANTENNA TS-235/UP
COAXIAL FITTING ON RF CABLE RF854 OF AN/TPS-1G
INNER INPUT CONDUCTOR OF TS-235/UP
ADAPTER CONNECTIONS FOR DUMMY ANTENNA TS-235/UP

Figure 7—70. Coaxial Adapter Connections

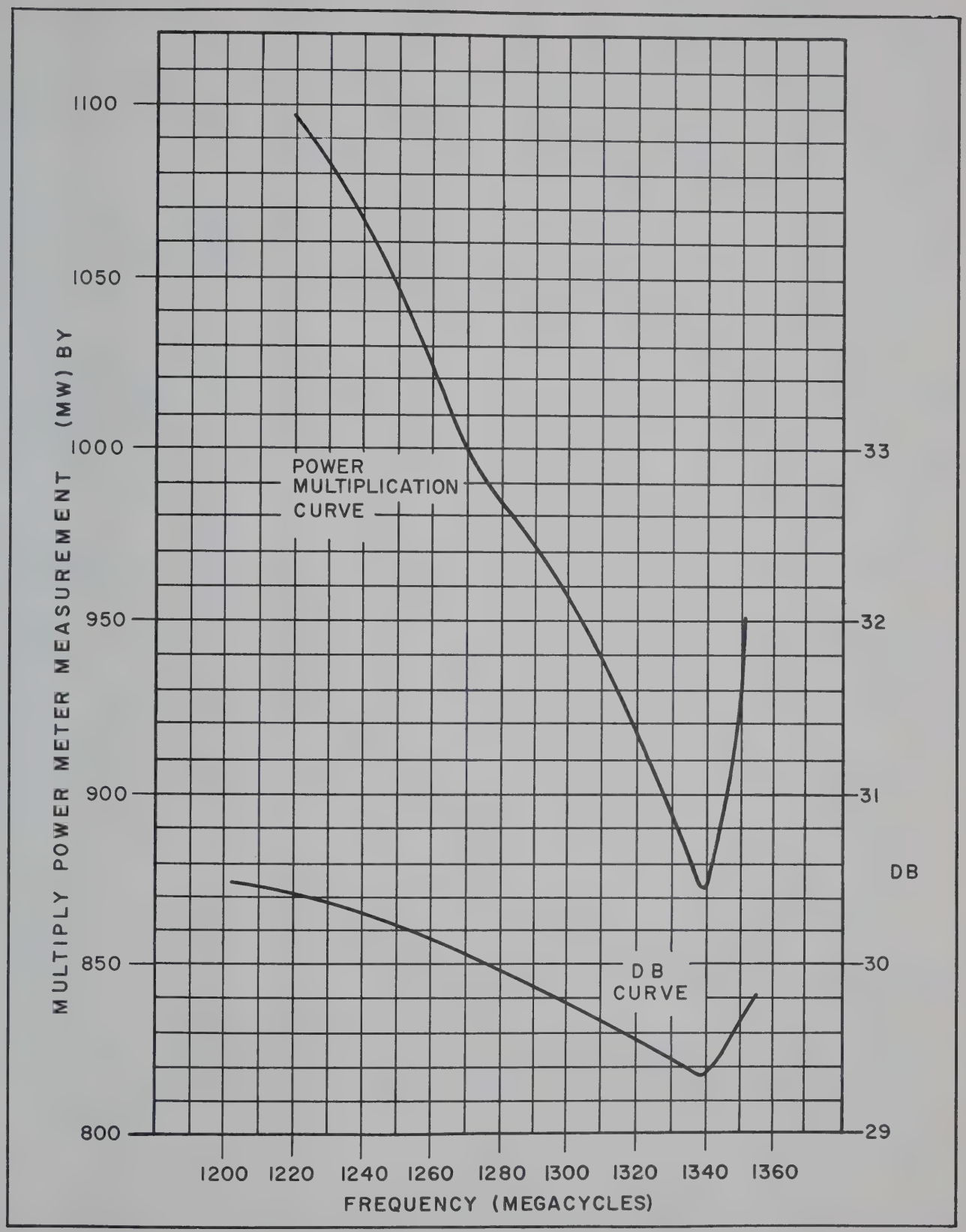

Figure 7—71. Directional Coupler Output Characteristic

11. Disconnect the echo box.

(*b*) MAGNETRON AGING.

When a magnetron (V502) is replaced, the replacement tube (new or previously used) *must* be aged according to the procedure given below. If the equipment has been out of service for over a month, it may be necessary to re-age the magnetron. A magnetron which requires aging produces unstable magnetron current and also is quite likely to produce undue arcing in the RF system. Also, such a magnetron is quite apt to trip the protective relay frequently (several times an hour).

To age a magnetron, proceed as follows:

1. Set the MAGNETRON AGING VARIAC switch (modulator unit) to the IN position.

2. Set the MAGNETRON AGING VARIAC control to 0 (fully counterclockwise).

3. Log the MAGNETRON TUNING dial reading or preferably log the transmitter frequency as measured by Tuned Cavity TS-172B/UP.

4. Tune the magnetron to the high-frequency end of its spectrum.

5. Turn on the equipment and set the variac so that the magnetron plate current is approximately 20 milliamperes.

6. Leave the equipment running under these conditions until stable magnetron operation is obtained.

Note

Stable magnetron operation is indicated by stable magnetron plate current and no arcing in the RF circuits.

7. After stable operation has been obtained at a plate current of 20 milliamperes, slowly increase the plate current by means of the variac, stopping to permit the magnetron to stabilize whenever unstable operation is encountered.

8. After stable operation has been obtained at a plate current of 40—44 millamperes, slowly tune the magnetron to the low-frequency end of its spectrum, stopping to permit it to stabilize whenever unstable operation is encountered.

9. Tune the magnetron to the original frequency.

10. The MAGNETRON AGING VARIAC control should now be in the maximum clockwise position. Set the MAGNETRON AGING VARIAC switch to the OUT position. The system is now ready for normal operation.

CAUTION

The MAGNETRON AGING VARIAC switch (modulator) should be set to the IN position only when the variac is used for magnetron aging. At all other times the switch should be set to the OUT position to prolong the life of the variac and prevent inadvertent operation of the equipment at a reduced power setting.

Note

If Radar Modulator MD-144A/TPS-1D has been temporarily replaced with Radar Modulator MD-144/TPS-1D, proceed as follows:

1. Remove plug P420 from J420 of the power supply unit.

2. Connect a variac (type V-20M) to J420. (See figure 7—69 for wiring diagram.)

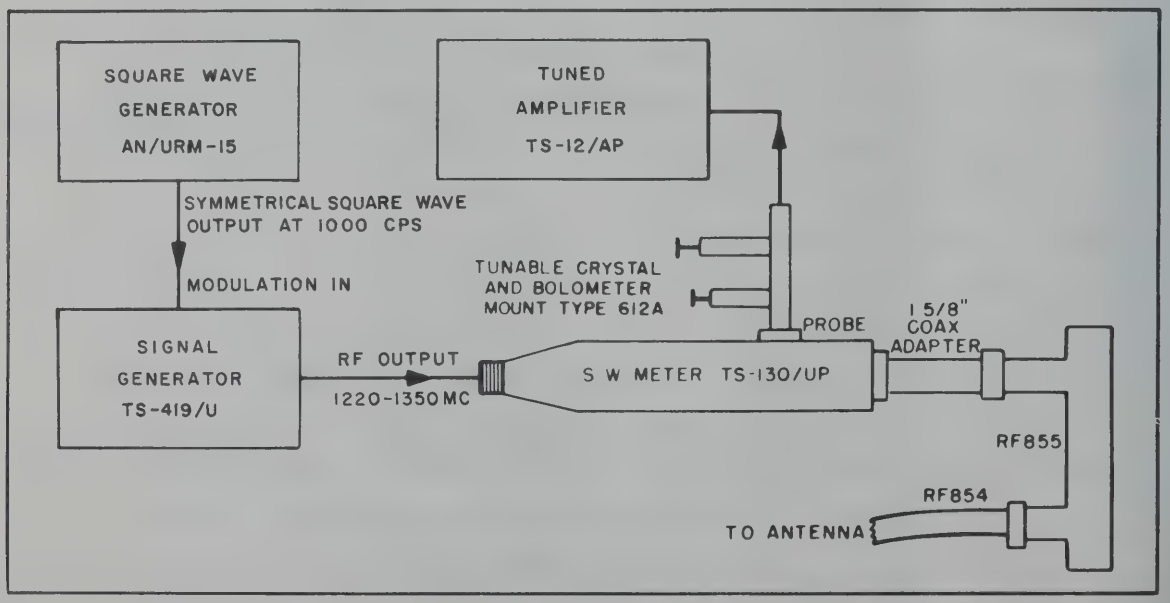

Figure 7—72. Test Equipment Arrangement for Measuring VSWR

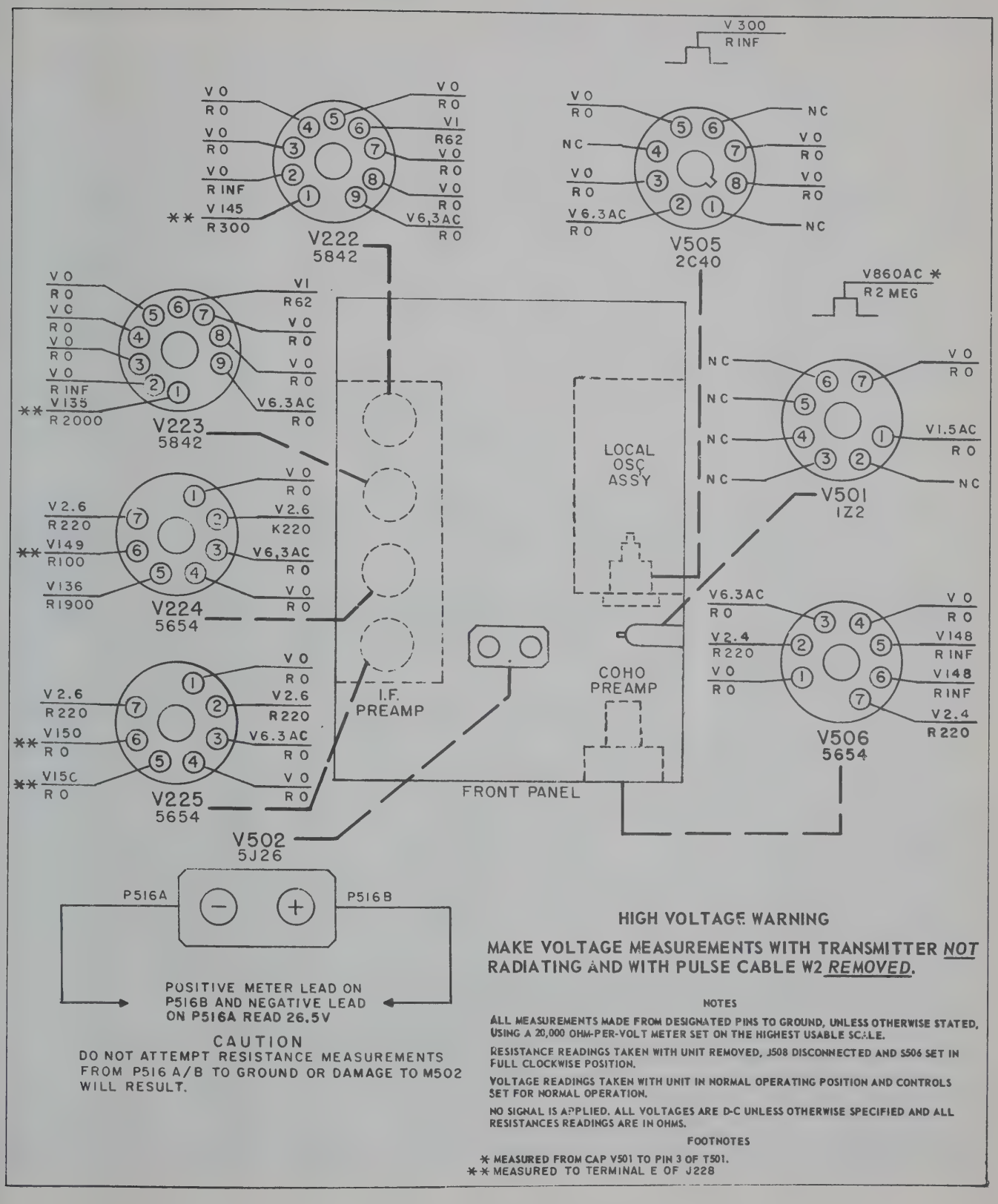
V 300
R INF
V222
5842
V505
2C40
V860AC *
R2 MEG
V223
5842
V501
1Z2
V224
5654
V225
5654
V506
5654
V502
5J26
LOCAL OSC ASSY
I.F. PREAMP
COHO PREAMP
FRONT PANEL
P516A
P516B
POSITIVE METER LEAD ON P516B AND NEGATIVE LEAD ON P516A READ 26.5V
CAUTION
DO NOT ATTEMPT RESISTANCE MEASUREMENTS FROM P516 A/B TO GROUND OR DAMAGE TO M502 WILL RESULT.
HIGH VOLTAGE WARNING
MAKE VOLTAGE MEASUREMENTS WITH TRANSMITTER NOT RADIATING AND WITH PULSE CABLE W2 REMOVED.
NOTES
ALL MEASUREMENTS MADE FROM DESIGNATED PINS TO GROUND, UNLESS OTHERWISE STATED, USING A 20,000 OHM-PER-VOLT METER SET ON THE HIGHEST USABLE SCALE.
RESISTANCE READINGS TAKEN WITH UNIT REMOVED, J508 DISCONNECTED AND S506 SET IN FULL CLOCKWISE POSITION.
VOLTAGE READINGS TAKEN WITH UNIT IN NORMAL OPERATING POSITION AND CONTROLS SET FOR NORMAL OPERATION.
NO SIGNAL IS APPLIED. ALL VOLTAGES ARE D-C UNLESS OTHERWISE SPECIFIED AND ALL RESISTANCES READINGS ARE IN OHMS.
FOOTNOTES
* MEASURED FROM CAP V501 TO PIN 3 OF T501.
** MEASURED TO TERMINAL E OF J228

Figure 7–73. Receiver-Transmitter Voltage and Resistance Measurements

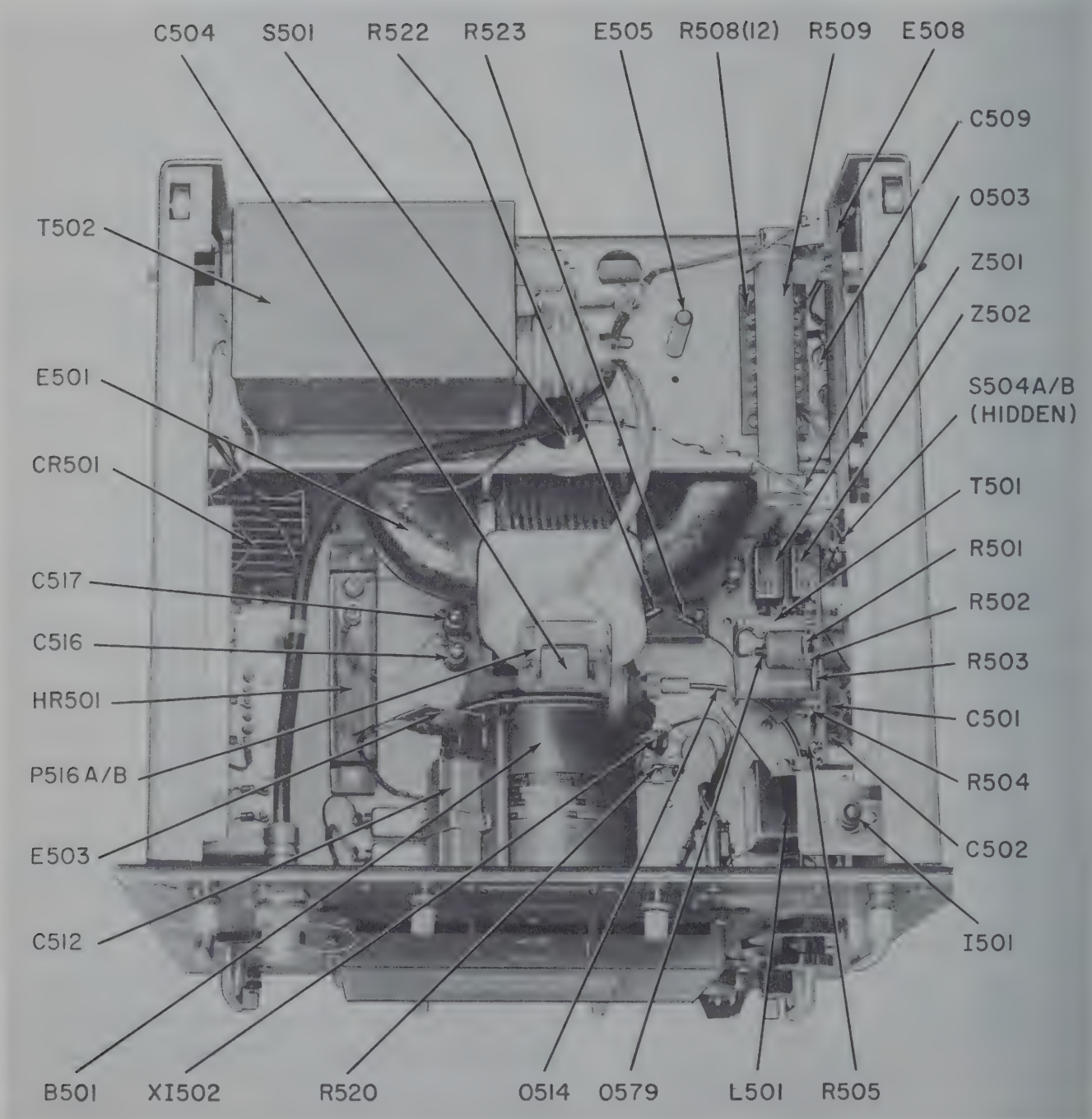

Figure 7—74. Receiver-Transmitter Component Locations (Top Right)

Note

Use type AN3106-16S-1P plug (not supplied) for wiring to the variac.

3. Follow steps 3 through 9 above and replace the variac plug at J420 with P420.

(*c*) USE OF DUMMY ANTENNA.

The dummy antenna is used for general testing and trouble shooting when it is desirable to eliminate antenna radiation. Since the characteristics of a dummy antenna load are not exactly the same as those of the load presented by the radar antenna, the transmitter operating frequency should not be set when the transmitter frequency is connected to the dummy antenna load. Also, because of the characteristics of the dummy antenna, it may be found necessary to re-balance the protective relay balance adjustment (R168) in the modulator unit.

Figure 7—70 shows how Dummy Antenna TS-235/UP is connected to the equipment by means of the 1-5/8-in. coaxial adapter (supplied). Connection can be made to RF854 as shown or to RF754 at the antenna. When connection is made to RF754, it is necessary to disconnect RF754 from the antenna horn.

(*d*) POWER MEASUREMENTS.

Direct power measurements can be made at the end of coaxial cable RF854, which normally runs to RF855 on the antenna base. An L-band 52-ohm water or sand load, with a minimum capacity of 1000 watts (average), is required.

The nominal peak output power is 500,000 watts at any point in the 1220—1350-Mc operating band. The average power figure for a 2-microsecond pulse at a repetition rate of 400 pps is 400 watts.

A good approximation of power output can be obtained from the directional coupler of RF501, this coupler having its output at connector J501 (RF TEST) on the receiver-transmitter panel. The RF pulse is

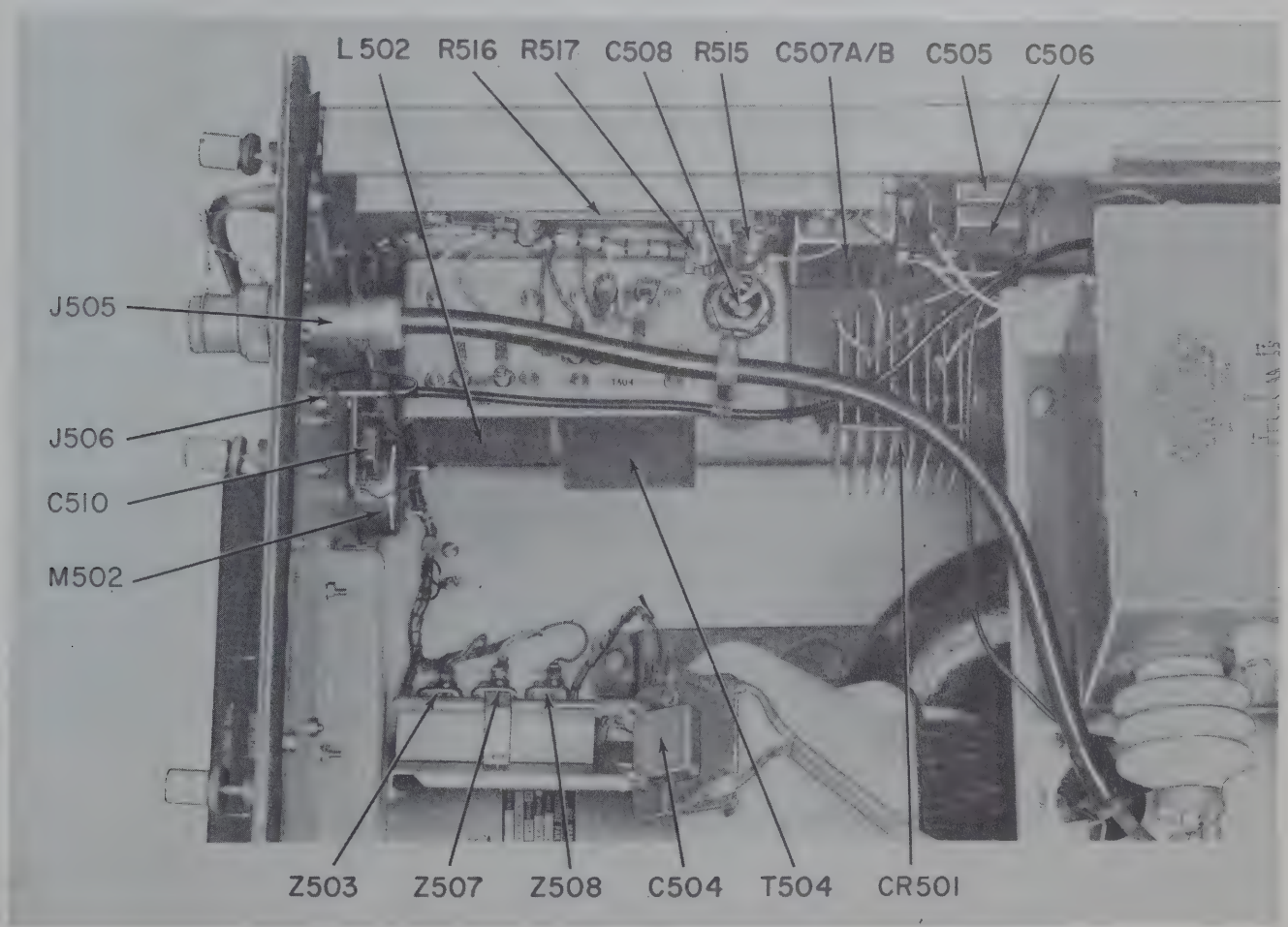

Figure 7—75. Receiver-Transmitter Component Locations (Top Left)

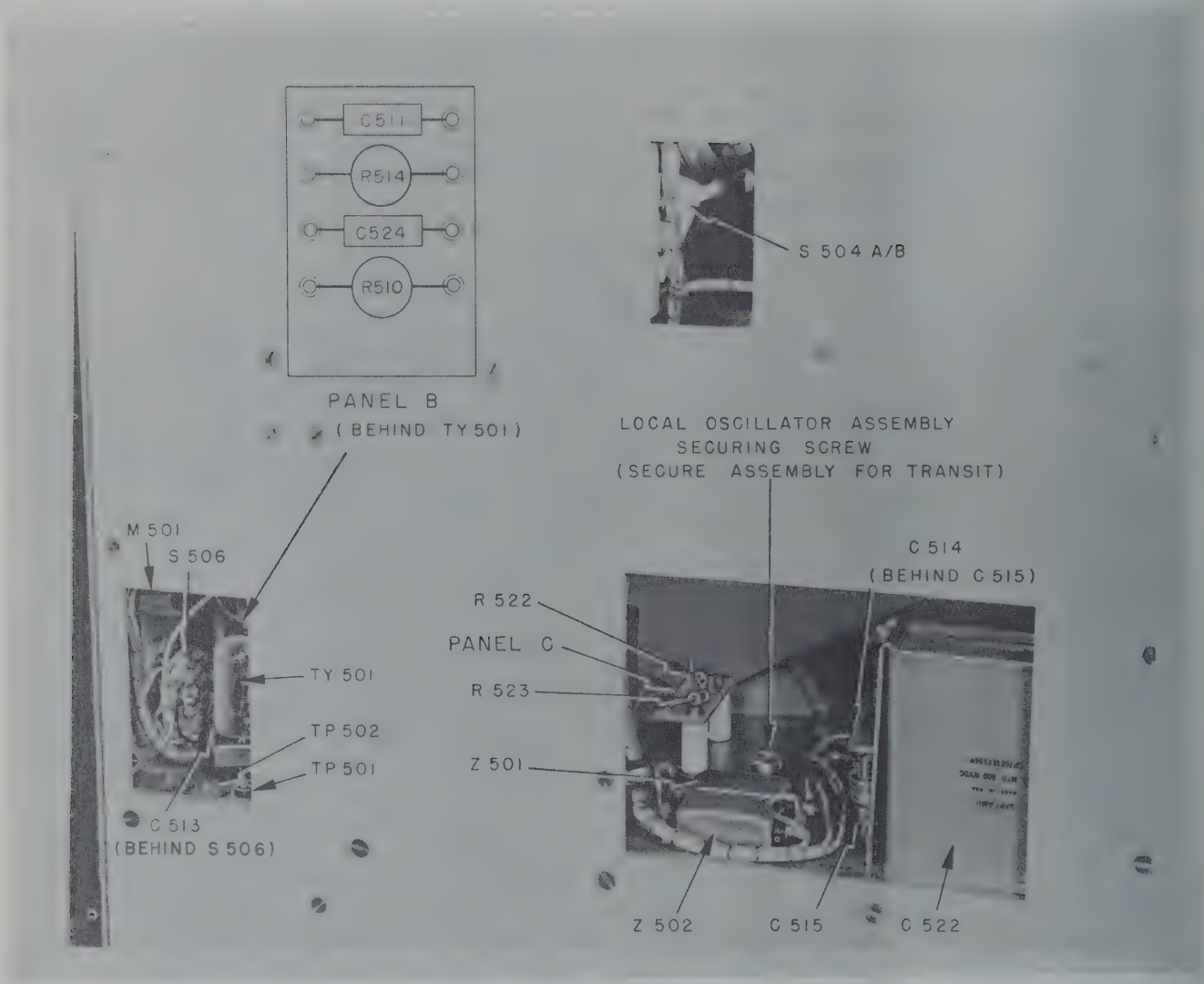

Figure 7—76. Receiver-Transmitter Component Locations (Right Side)

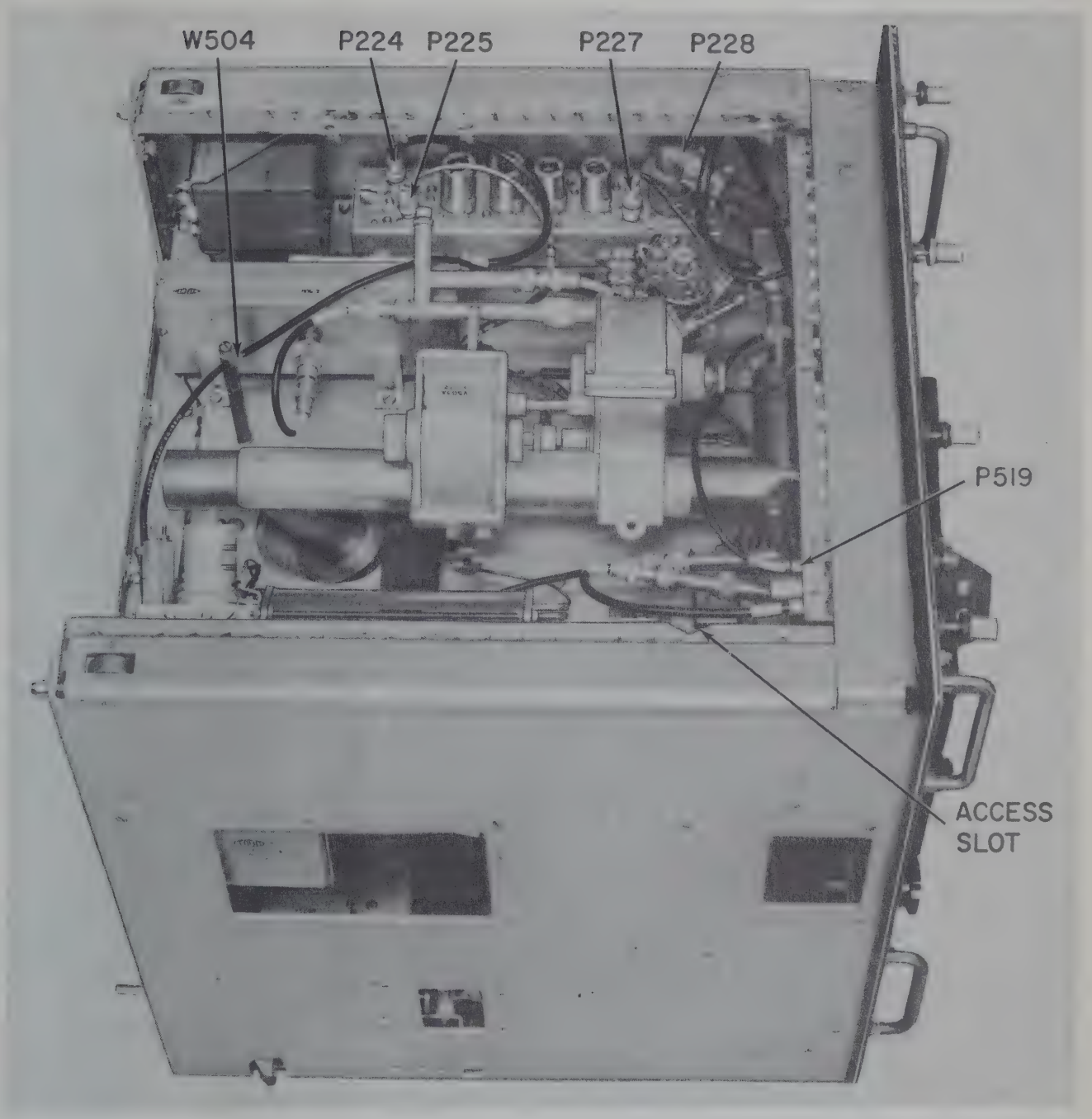

Figure 7—77. Receiver-Transmitter Component Locations

attenuated 29 to 31 db, depending on the operating frequency. The curve of figure 7—71 shows the variation in output vs. operating frequency.

A test instrument such as Wave and Power Meter AN/URM-23 is required. This is a bolometer type of power-measuring instrument covering the range of 1220—1350 Mc and capable of measuring powers up to 1000 milliwatts. The limit of the basic instrument is actually 50 milliwatts, and the associated 10- and 3-db attenuators increase the range to 1000 milliwatts. (Additional 3- and 6-db attenuators extend the limit of the AN/URM-23 to 8000 milliwatts.)

The instrument used should have the frequency range and at least the 1000-milliwatt power-measuring capabilities of the AN/URM-23. For a transmitter output power of 400 watts, the power represented at J501 is in the range of 500 to 800 milliwatts, depending on the transmitter frequency.

To obtain a measurement by means of the directional coupler, connect the wave and power meter to J501 (type AN connector) on the receiver-transmitter unit, and connect the power cord of the test instrument to J409 on the power supply unit. Allow a 10-to-15-minute warm-up with radiation. Take the measurement according to the instruction book of the test instrument. Convert the reading by the use of the curve of figure 7—71.

The resultant figure will give a good approximation of average power, assuming that the antenna is connected to the transmitter through the RF coaxial cables and fittings normally used for a field installation. If the antenna is installed remotely with an extension coaxial cable, the measurement may be somewhat in error, depending on the voltage standing-wave ratio of the feed system.

(*e*) VOLTAGE STANDING-WAVE RATIO (VSWR) MEASUREMENT.

1. GENERAL.

VSWR measurements are made looking into RF855, which is the U-shaped RF coaxial connector normally connected to the receiver-transmitter RF output, jack J502. If the equipment is set up as a field installation, RF855 is connected to RF854 (83-in. RF-19/U cable), and thence to RF851 and J755 at the antenna base unit. If the antenna is operated remotely, RF854 is connected to a rigid 1-5/8 in. coaxial line, and thence to RF851 and J755.

In either case, by making measurements looking into RF855, the VSWR of the entire feed system is taken.

Test equipment required:

1-5/8 in. coaxial adapter packed in case (CY—1297/TPS-1D)

Standing Wave Meter TS-130/UP or equivalent

Signal Generator TS-419/U

Pulse Generator, Lavoie Lab., Type LA-592B, AN/UPM-15 Hewlett-Packard Type 210 A, or equivalent

Tunable Crystal and Bolometer Mount, Polytech Research Development Type 612A, or equivalent

Standing Wave Indicator TS-12/AP

2. METHOD OF MEASUREMENT.

a. Set up the equipment as shown in figure 7—72.

b. Turn on the test equipment and allow a 10-to-15-minute warm-up.

c. Set the square-wave generator for symmetrical square-wave output at 1000 cps.

d. Set the signal generator to 1220 Mc with approximately 1-milliwatt output.

e. With the tuned amplifier (TS-12/AP) set at maximum sensitivity, adjust the tunable crystal mount for maximum reading on the tuned amplifier. (Reduce sensitivity as required.)

f. On the TS-130/UP, slide the probe slowly back and forth so as to locate the points of maximum and minimum readings, as observed on the tuned amplifier.

g. The VSWR at 1220 Mc is the ratio of the readings taken at these two points.

h. Likewise, make measurements at every 20-Mc point from 1220 to 1350 Mc, changing the frequency of the signal generator and retuning the tunable crystal mount as required. The VSWR should be no greater than 1.65:1 for the normal field set-up. The maximum expected VSWR for a remote antenna installation is 2:1 at the maximum distance of 150 feet.

Note

It is suggested that a VSWR-vs-frequency plot be made of systems with remote antenna installations whose VSWR measurements exceed 1.65:1 at one or more points in the 1220—1350-Mc band. Reference then can be made to the plot for adjusting the transmitter to frequencies at which the VSWR does not exceed 1.65:1.

(*f*) NOISE MEASUREMENTS.

To obtain reliable over-all noise measurements of the AN/TPS-1G special test equipment and techniques are required. A noise generator, designed for L-band, and special calibrating equipment are the main requisites for accurate measurement.

Measurements are made by first measuring the noise of the system with the noise generator off. The signal generator is then turned on and the signal level adjusted to equal the original noise level of the system. The output signal level of the generator is then the noise figure of the system.

This method of noise measurement is often used with a CW signal generator substituted for the noise generator. However, noise measurements so made will be inaccurate for these two main reasons. First, it is difficult to obtain an accurate measurement of the output level of the signal generator for the low level required. Second, the devices used for measuring receiver power may not respond to noise and CW in the same way. Also, a certain amount of mathematics is required to convert

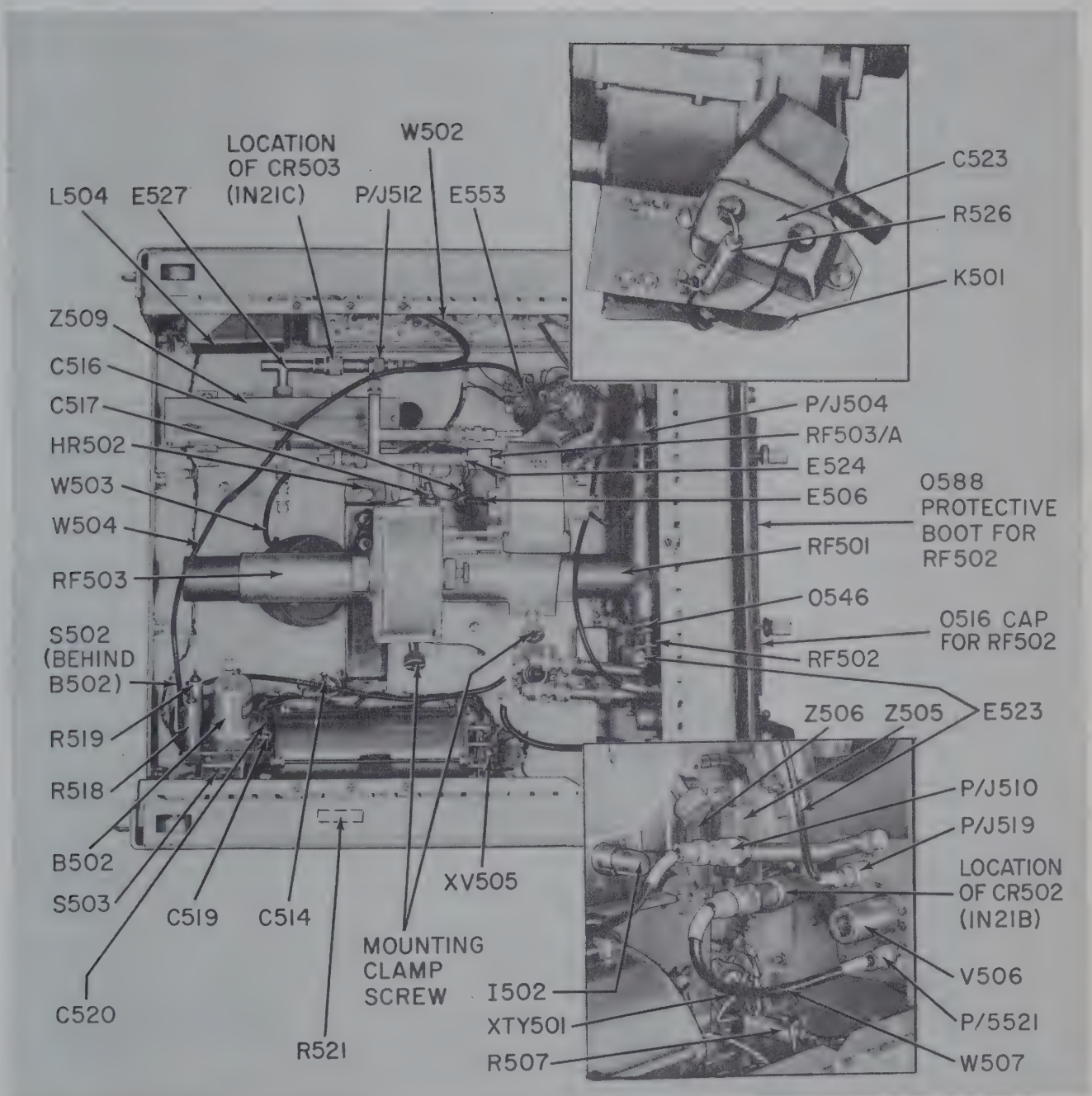

Figure 7–78. Receiver-Transmitter Component Locations (Bottom Side)

the measurement to the actual measurement as determined by the bandwidth of the system.

Lacking adequate test equipment, certain checks can be made to locate the cause of an apparent high noise figure. An indication that the noise level of the system may be high is the inability to detect weak signals, especially at long ranges. Such observations should be made, if possible, on distant fixed targets; otherwise, several observations should be made of moving targets before any conclusions are drawn.

The possible causes of high noise level are as follows:

Loose RF fittings
Improperly tuned RF system
Faulty signal mixer crystal CR503
Poor 60-Mc preamplifier tube (V222-V225)
Defective local oscillator V505
Defective magnetron V502
Misadjustment of C240

Check these factors in the order given. For possible indication that an improvement in the noise figure is being made, observe the noise level on the A-scope during normal operation. Also, the noise level at the output of the 60-Mc IF amplifier can be monitored by the signal comparator test meter, with the TEST SELECTOR switch in the IF AMPL. LEVEL position. A decrease in the noise level does not necessarily mean an actual improvement, however, because the signal level may also have been decreased by the same amount. If possible, make checks with the antenna stopped on a steady weak signal which is near the noise level. A comparison between the noise and signal levels then provides a good indication of reduction in the noise figure.

(*g*) MAGNETRON MAGNET CHECK.

On rare occasions a weak magnetron magnet may be encountered. Such a condition results in high magnetron plate current and poor signals. Double-moding and FM-ing of the magnetron also are quite likely to occur, this condition being detectable by poor cancellation of clutter signals. Also, the magnetron may oscillate only on portions of the operating band.

If a weak magnet is suspected, first check the equipment with at least one other magnetron which has been properly aged (see paragraph *(b)* above). If the symptoms are present on all magnetrons, check the magnetron magnet as follows:

1. Remove the magnetron.

2. Insert the probe meter of a fluxmeter (TS-15/AP, TS-15A/AP, TS-15B/AP, or equivalent) between the pole-pieces of the magnetron magnet, E501, as outlined in the instruction book for the fluxmeter.

3. Adjust and read the fluxmeter. The nominal reading is 1400 ± 50 gauss. (The magnetron spectrum is good at flux densities down to 1200 gauss.) Replace magnets which measure below 1200 gauss.

4. Replace E501 if required.

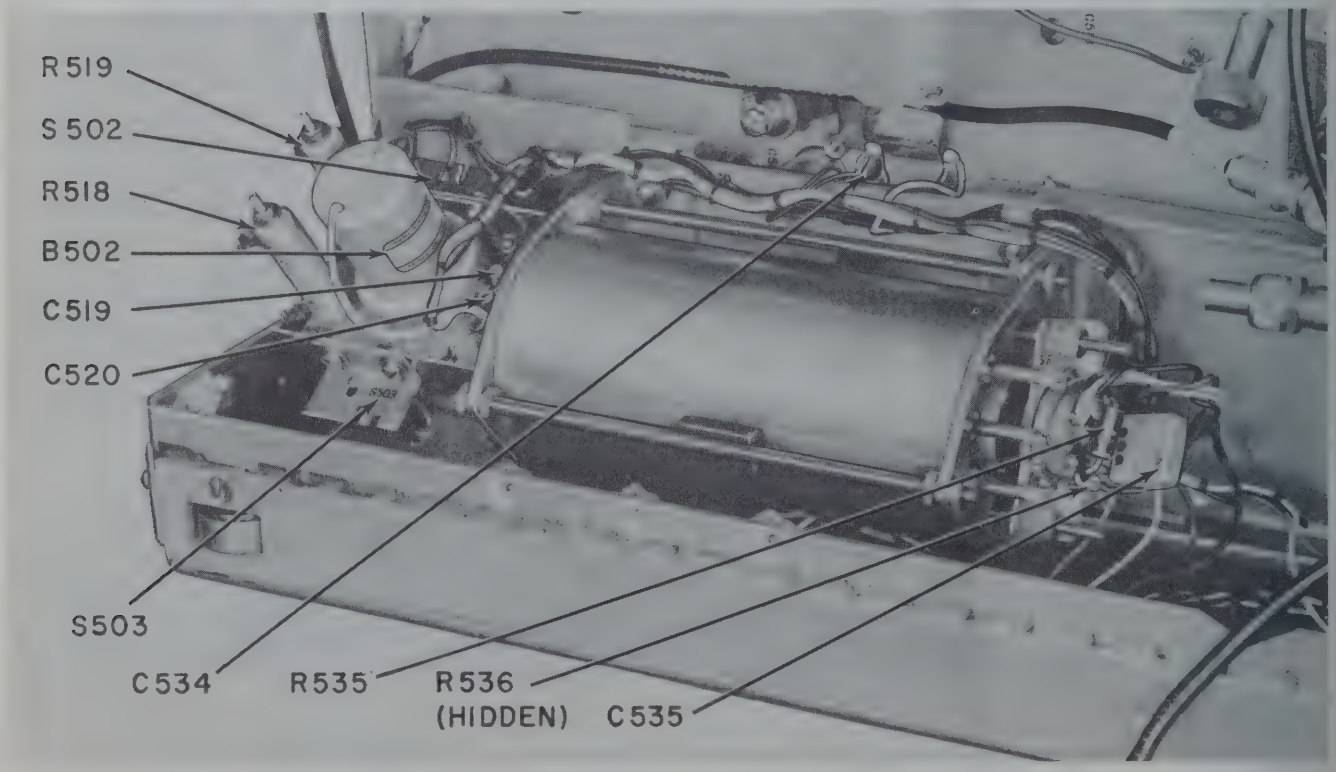

Figure 7—79. Local Oscillator and Control Assembly Component Locations

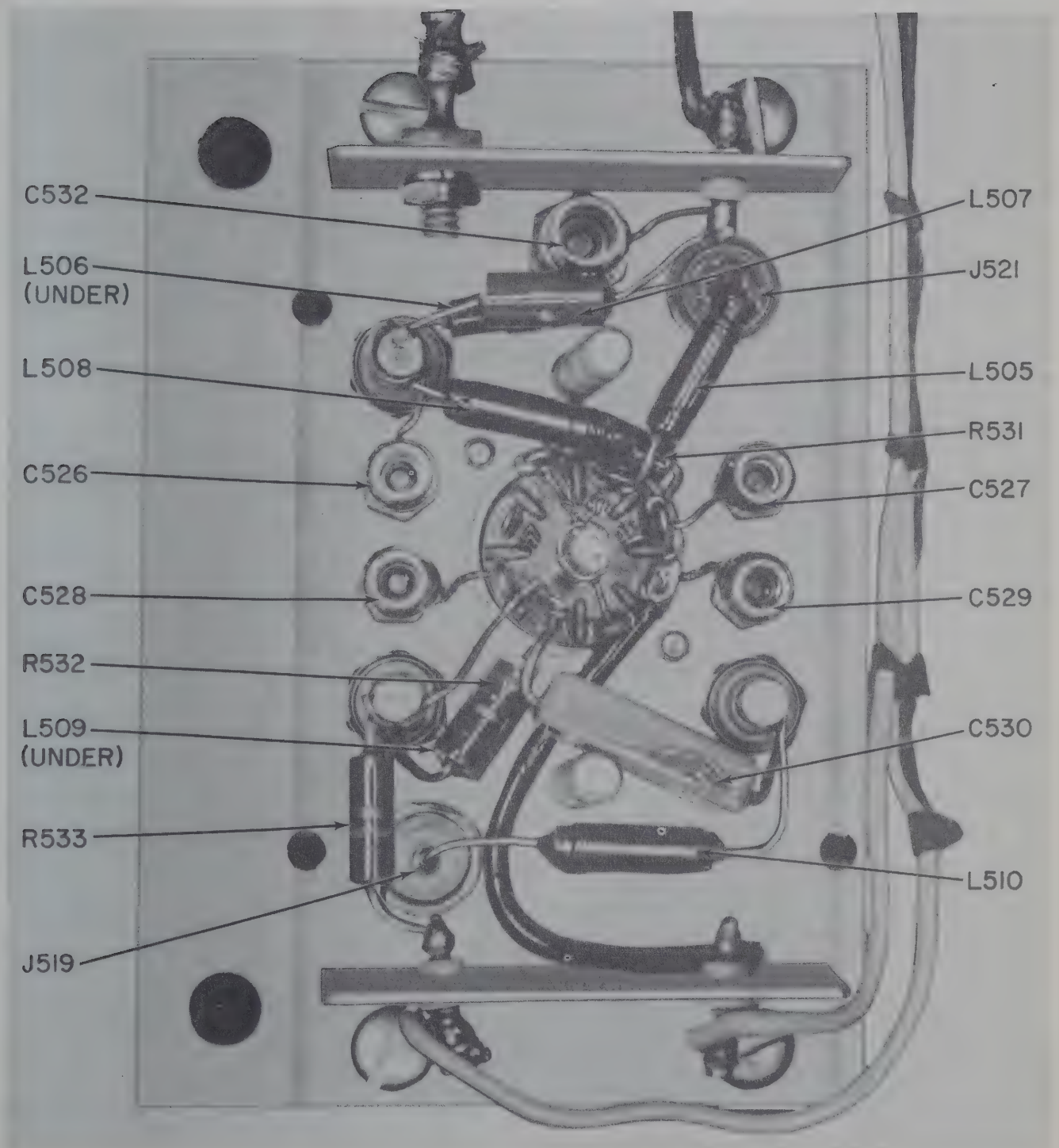

Figure 7—80. Coho Preamplifier Component Locations

5. Reinstall the magnetron.

6. Check operation at several points in the 1220—1350-Mc band and retune the RF system as required.

10. ANTENNA BASE.

a. TROUBLE-SHOOTING.

(1) SERVO AMPLIFIER.

Most troubles which could occur in the servo amplifier will be evidenced by irregularities in the mechanical operation of the antenna.

Failure of the antenna to rotate at all or in one direction generally indicates the absence of power or a defective relay. When checking, be sure to check the antenna drive-motor field supply (approximately 95 volts dc) and also the antenna drive motor (brushes, etc.).

Failure of the servo circuits is usually manifested by hunting, a tendency to stall with wind loading, incorrect rotation speeds, creeping when set for 0 rpm, etc. Such faults are most apt to be caused by a defective tube in the servo amplifier. Improper adjustment of the servo amplifier controls (screwdriver) could also cause the symptoms given.

The voltage and resistance measurements of figure 7—84 will be helpful in locating defective components. Component locations are shown in figures 7—82, 7—83, and 7—85 through 7—88.

Synchro system troubles which appear to be due to a defect in the antenna base unit could be caused by K704 or T702 in the servo amplifier. The output voltage of T702 (terminals 1 and 3) should be 78 ac with 115-volt input.

(2) DRIVE ASSEMBLY.

No special technique is required to locate troubles which might develop in the drive assembly of the antenna base. The antenna drive motor, B751, is a d-c machine, and hence commutator and brush inspection should be made in the event of failure.

Checks of the assembly circuits, which include a portion of the synchro system, can be made with the 20,000-ohms-per-volt meter. Circuits should be checked for resistance to ground as well as continuity. This is particularly true of the synchro circuits, which are readily upset by leakage to ground.

Mechanical difficulties and also arcing difficulties are usually detected aurally. Any abnormal sounds originating in the drive assembly should be investigated immediately.

The exploded view of the antenna drive assembly is shown in figure 7—90. If inspection and/or repair which requires exposing internal parts is necessary, special care should be taken to keep all parts clean. This is true of not only bearing surfaces, but also of the contact surfaces of the RF rotary joint.

b. SERVO AMPLIFIER ADJUSTMENTS.

(1) GENERAL.

The need for adjustment is usually caused by component replacement, aging of tubes or components, etc. If

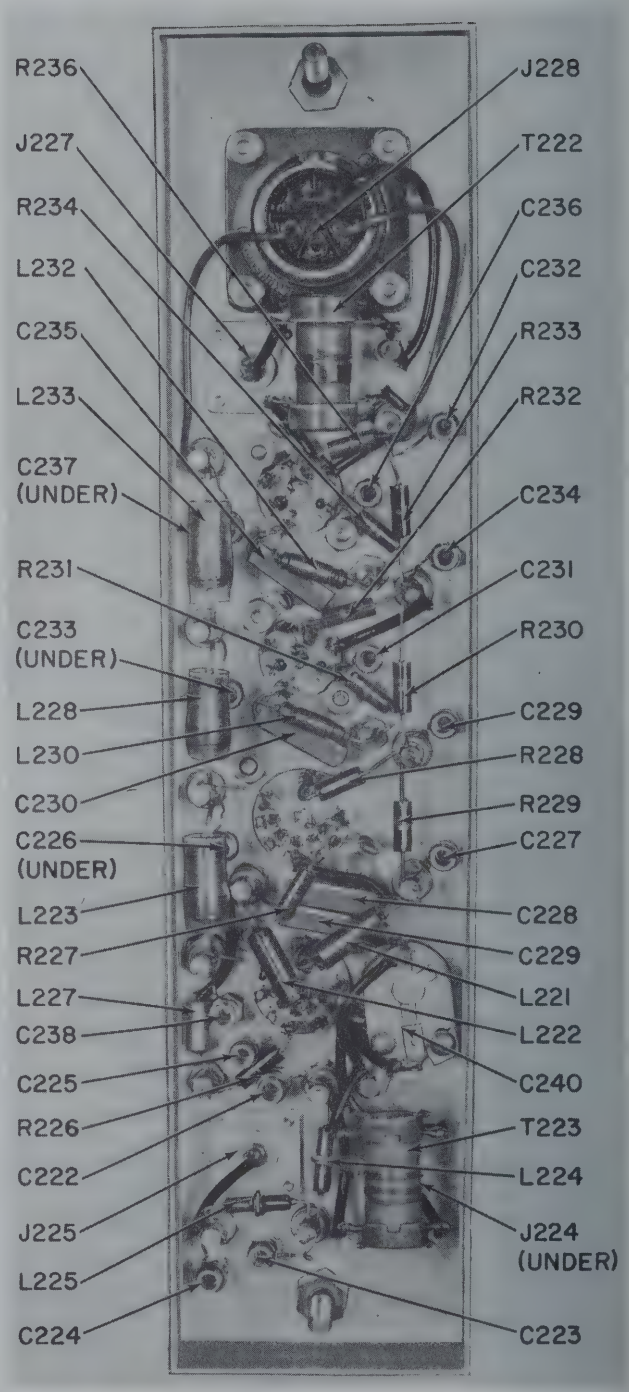

Figure 7—81. IF Preamplifier Component Locations

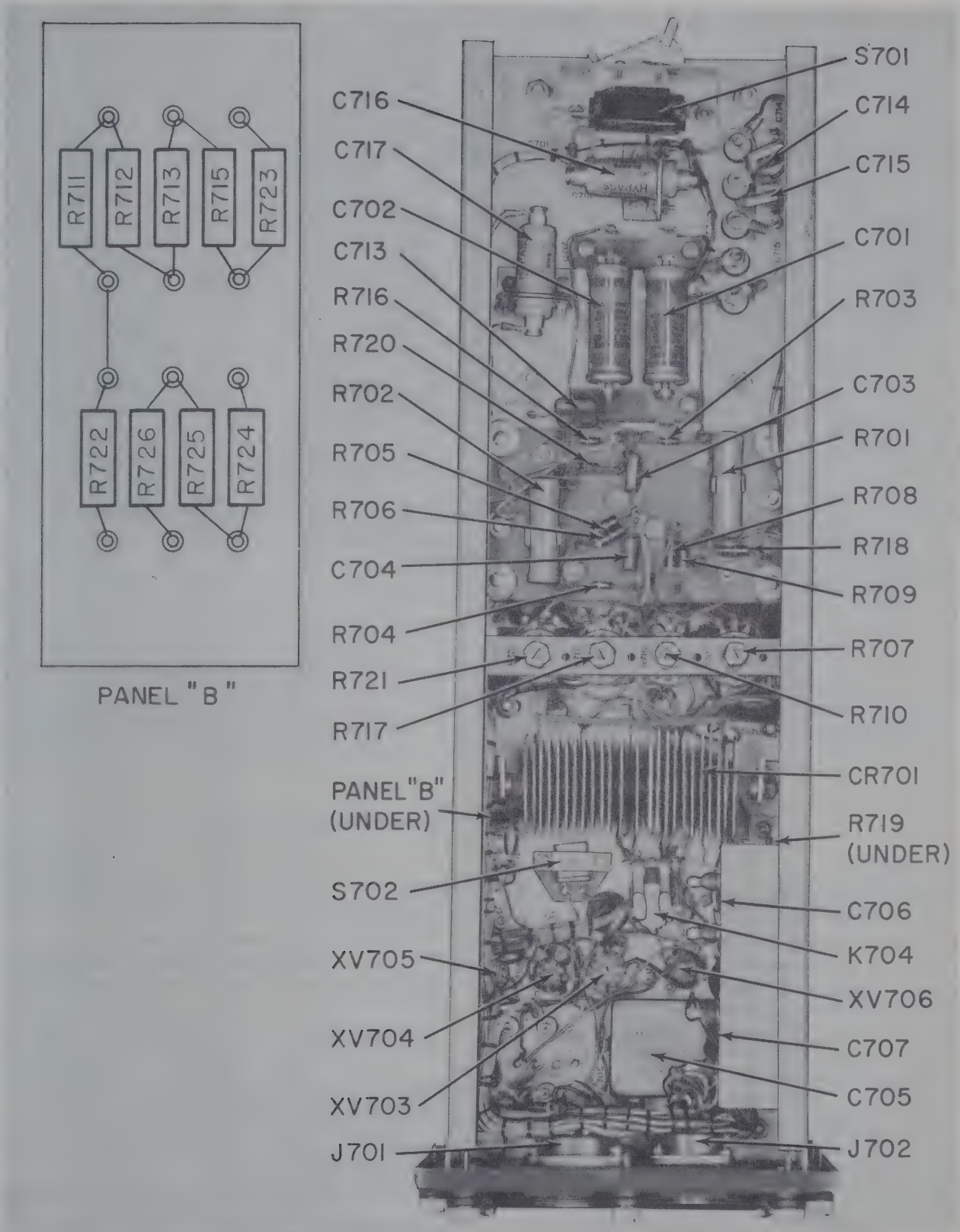

Figure 7—82. Servo Amplifier Component Locations (Bottom Side)

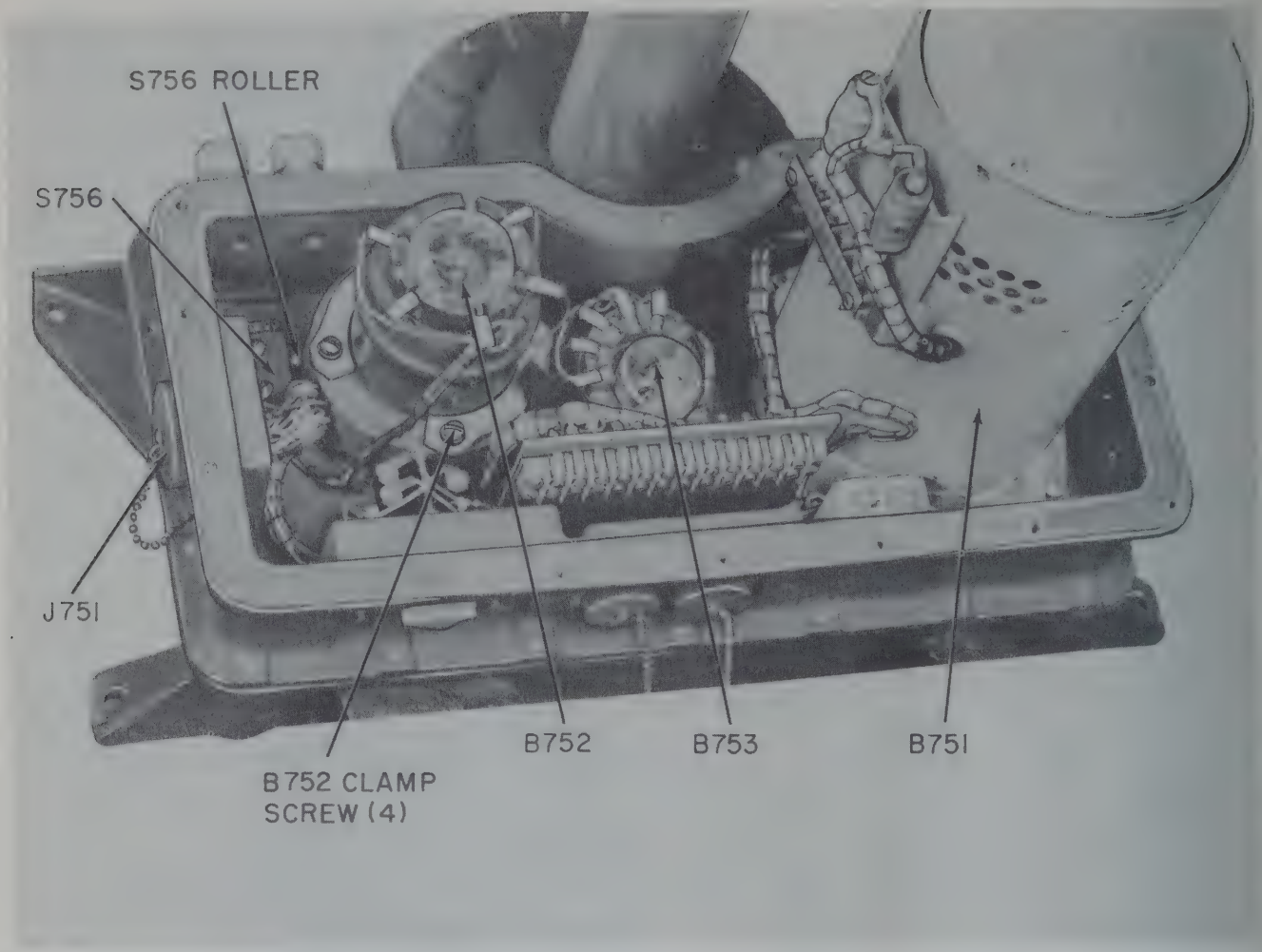

Figure 7—83. Antenna Drive Motor Assembly Component Locations

extensive or frequent adjustment is necessary, check for a defective component.

Always mark the position of a control before adjustment so that the control can be returned to its original setting if necessary. When making adjustments, keep close watch of the thyratron plates, V701 and V702, which are normally colorless for any degree of antenna rotation. The plates must not remain red for more than one second. Be sure that the theory of the servo amplifier operation is understood before making an adjustment. (See paragraph 9.*b*., Section 2.)

Besides the adjustments of the servo amplifier, the only other adjustments are those of the antenna base synchro system. These are straightforward, being essentionally those common to many radar systems.

(2) THYRATRON BIAS ADJUSTMENT R721. *(See figure 7—82.)*

This control adjusts the initial bias for the thyratrons, V701 and V702. Adjustment is usually necessary if V701, V702, V703, or V705 is replaced, or if associated components are replaced.

To adjust R721, proceed as follows:

(*a*) Warm up the equipment for at least 15 minutes with the ANTENNA ROTATE control (indicator unit) set at zero.

(*b*) Slowly turn ANTENNA ROTATE control (indicator unit) until relay (K702) just de-energizes.

(*c*) Turn R721 clockwise so as to cause a glow in V701 and V702.

(*d*) Turn R721 counterclockwise to a position where the glow of V701 and V702 just extinguishes.

(*e*) Lock R721.

(3) VOLTAGE AND CURRENT FEEDBACK ADJUSTMENTS R707 AND R710. *(See figure 7—82.)*

As these two adjustments both affect the action of the control tube, V703A, they should always be adjusted together.

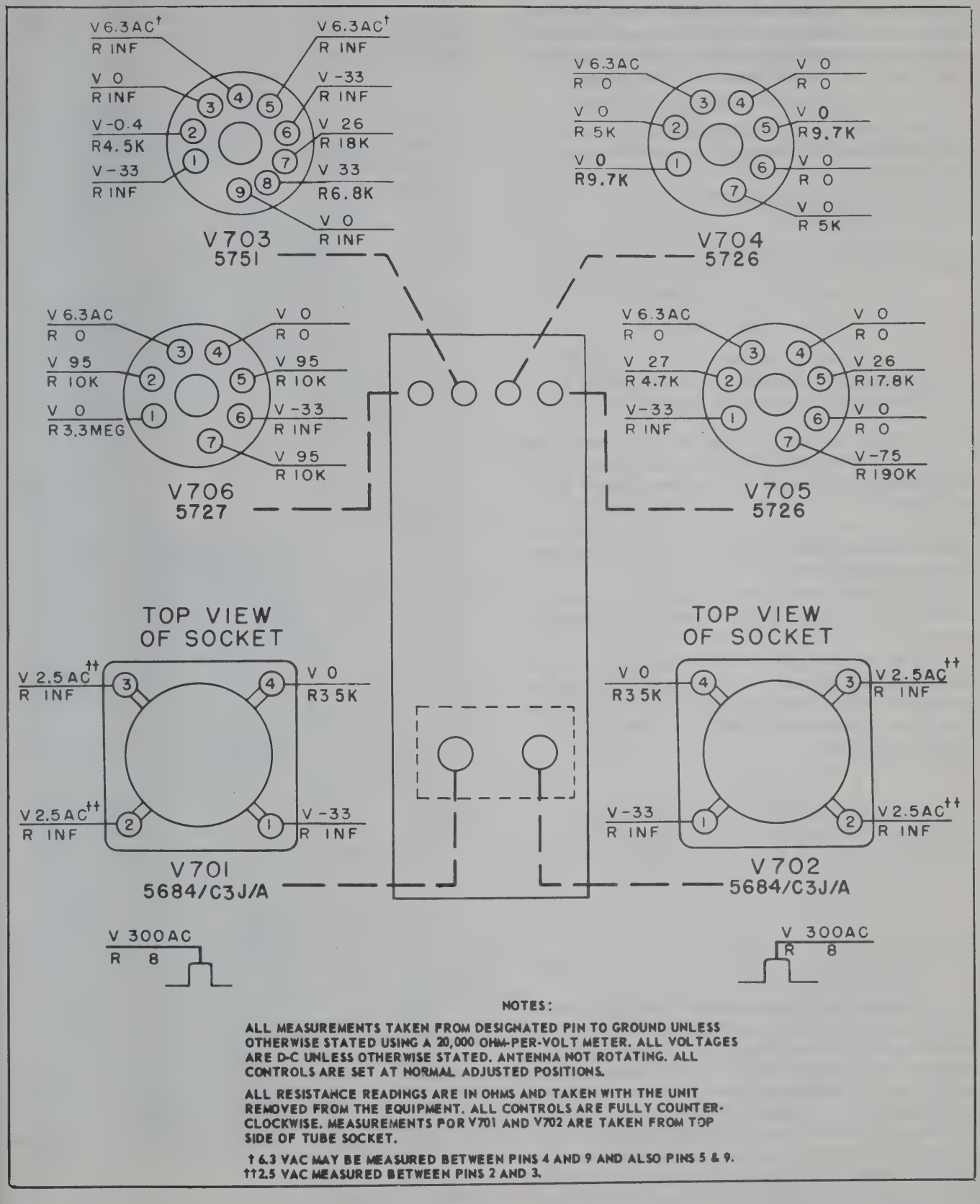

NOTES:

ALL MEASUREMENTS TAKEN FROM DESIGNATED PIN TO GROUND UNLESS OTHERWISE STATED USING A 20,000 OHM-PER-VOLT METER. ALL VOLTAGES ARE D-C UNLESS OTHERWISE STATED. ANTENNA NOT ROTATING. ALL CONTROLS ARE SET AT NORMAL ADJUSTED POSITIONS.

ALL RESISTANCE READINGS ARE IN OHMS AND TAKEN WITH THE UNIT REMOVED FROM THE EQUIPMENT. ALL CONTROLS ARE FULLY COUNTER-CLOCKWISE. MEASUREMENTS FOR V701 AND V702 ARE TAKEN FROM TOP SIDE OF TUBE SOCKET.

† 6.3 VAC MAY BE MEASURED BETWEEN PINS 4 AND 9 AND ALSO PINS 5 & 9.
†† 2.5 VAC MEASURED BETWEEN PINS 2 AND 3.

Figure 7—84. Servo Amplifier Voltage and Resistance Measurements

Need for adjustment is usually due to component replacement or possibly to component aging. Symptoms which indicate that adjustment may be required are: uneven rotation (especially at slow speeds) and variations in antenna speed with changes in wind-loading.

To adjust R707 and R710, proceed as follows:

(*a*) Warm up the equipment for at least 15 minutes with the ANTENNA ROTATE control (indicator unit) set at zero.

(*b*) Unlock and turn R707 and R710 to their full-clockwise positions.

(*c*) Set the ANTENNA ROTATE control for maximum speed (15 rpm either cw or ccw rotation).

(*d*) Adjust R707 for an antenna speed of 15 rpm.

Note

Antenna speed can be determined by counting rpm. Usually a count for 20 or 30 seconds is sufficient for the degree of accuracy involved.

(*e*) Turn the ANTENNA ROTATE control for 1 rpm and observe the glow of the thyratrons for possible oscillation indicated by the glow flickering at a slow rate.

(*f*) If oscillation is detected, turn R710 counterclockwise about 1/8 turn so as to reduce, but not completely stop, oscillation.

(*g*) Turn ANTENNA ROTATE control again to 15 rpm and adjust R707 for a count of 15 rpm of the antenna.

(*h*) Repeat steps (*e*), (*f*), and (*g*) until the maximum clockwise positions of R707 and R710 are obtained with no oscillation at 1 rpm and with the antenna rotating at 15 rpm when the ANTENNA ROTATE control is set for 15 rpm.

Note

If, after adjusting R710, during the process it is impossible to obtain 15 rpm antenna rotation by adjusting R707, adjust R2619 in the indicator as given in paragraph 6.*e.*(18).

(*i*) Be sure to lock controls before securing the servo amplifier.

(4) OVERLOAD ADJUSTMENT R717. *(See figure 7—82.)*

By adjusting the cathode bias to V706, R717 determines the point at which the voltage (produced by feedback current) applied to the grid of V706 produces conduction. The conduction of V706, in turn, effects a reduction in antenna motor armature voltage. This feedback voltage can be checked at TP702 and should be a maximum of 60 to 70 volts for normal operation. This voltage is indicative of a current of 1.9 to 2.1 amperes in the armature of antenna drive motor B751. R717 should be adjusted so that this voltage is limited at 80 for an overloaded condition.

Adjustment is usually necessary if V706 or associated components are replaced. The need for adjustment is usually indicated by a premature failure of the type-5684/C3J/A thyratrons (V701 and V702) or by the antenna stalling when loaded by heavy winds.

CAUTION

While making adjustments, do not allow the thyratrons, V701 and V702, to become red for more than one minute, or damage to these tubes will result.

To adjust R717, proceed as follows:

(*a*) Stop the antenna and pull out the servo amplifier chassis.

(*b*) Connect Multimeter ME-48/U (set on the 250-volt d-c scale) to TP702 (+) and ground (−).

(*c*) Lash the antenna to the top of tower with rope so that it will not rotate. (See Section 6, paragraph 3.)

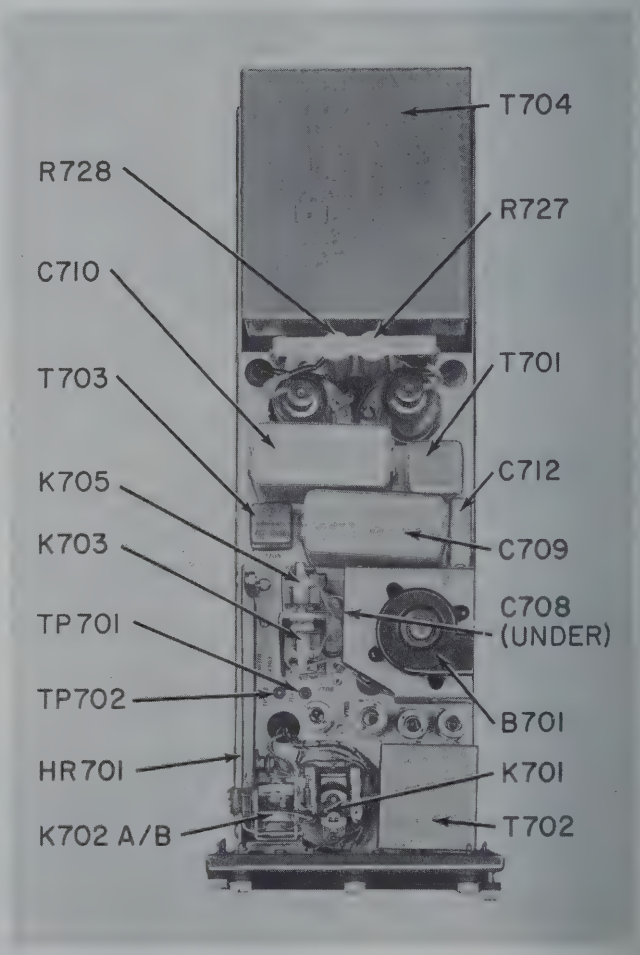

Figure 7—85. Servo Amplifier Component Locations (Top Side)

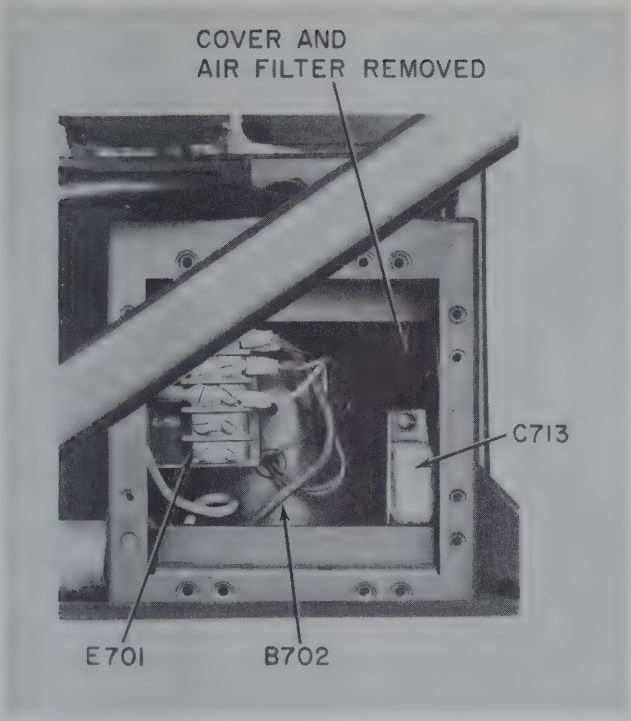

Figure 7—86. Servo Amplifier Case Component Locations

CAUTION

Do not lash rope to the RF coax fittings. Remove such fittings if necessary.

(*d*) Energize the equipment and allow a 10-15-minute warm-up.

(*e*) Unlock and set R717 fully clockwise.

(*f*) Slowly advance the ANTENNA ROTATE control (indicator unit) until the multimeter reads 80 volts.

(*g*) Wait 5 to 10 seconds to permit the integrating circuit to reach maximum voltage.

(*h*) Slowly turn R717 counterclockwise in small increments while observing the multimeter (watch for a sudden decrease in reading).

(*i*) After the reading decreases, turn the ANTENNA ROTATE control for zero antenna rpm.

(*j*) Wait 4 or 5 seconds and then slowly advance the ANTENNA ROTATE control in the same direction as before until the multimeter reads 70.

(*k*) Wait 5 to 10 seconds and then slowly advance the ANTENNA ROTATE control in increments which produce a 2-volt change in the multimeter reading.

(*l*) If the adjustment of R717 is correct, the sudden drop in the multimeter will occur when within ±2 volts of 80. (Readjust as required.)

(*m*) Lock R717 and shut down the equipment.

(*n*) Return the equipment to its normal operating condition.

c. DRIVE ASSEMBLY ADJUSTMENTS. *(See figure 7—83.)*

(1) GENERAL.

Adjustments of this assembly involve the synchros, B752 and B753, and the 1-speed cam and microswitch, S756. The requirements are that B752 be at electrical zero when the 1-speed cam engages S756, and that B753 be adjusted so that the RPPI sweep position is the same as the indicator sweep position.

The only reasons for making adjustments as corrective maintenance are as follows:

Synchro or microswitch replaced

Adjustment changed because of loosened synchro or microswitch

Adjustments disturbed because of other corrective maintenance

If trouble is encountered in the synchro system, check first for loosened parts or adjustments. Then check synchro voltages, circuit continuity, grounds, and the operation and contacts of K704 (servo amplifier). Also check the indicator synchro for mechanical or electrical defects.

(2) B752 AND 1-SPEED CAM. *(See figure 7—83.)*

As the synchro system is aligned at the indicator for agreement between the antenna and PPI sweep positions, the rotor of B752 may have any random position in relation to the antenna position.

To adjust B752 and the 1-speed cam, proceed as follows:

(*a*) Remove the cover of the antenna drive motor subassembly (see figure 7—87).

(*b*) Rotate and stop the antenna so that the point of the cam is resting on the roller of the microswitch.

(*c*) Loosen the four body clamp screws of B752.

(*d*) Carefully rotate and position the body of B752 so that the a-c voltages measured across the B752 terminals are as follows:

S1 to S3 — 0 volts
R1 to S2 — 37 volts (approx.)

Note

The B752 terminals are exposed on its top side. Use the 20,000-ohms-per-volt multimeter. First adjust the voltage for S1 and S3. (The highest voltage to be encountered is 193, approx. Use the lowest voltage scale to obtain an accurate zero position.) If the R1 and S2 voltage is 193 approx. when the S1 and S3 voltage is zero, the synchro body is 180° out of position. Rotate the body of B752 180° and rezero.

(*e*) When proper measurements are obtained, carefully secure the body clamp of B752 and replace the subassembly cover.

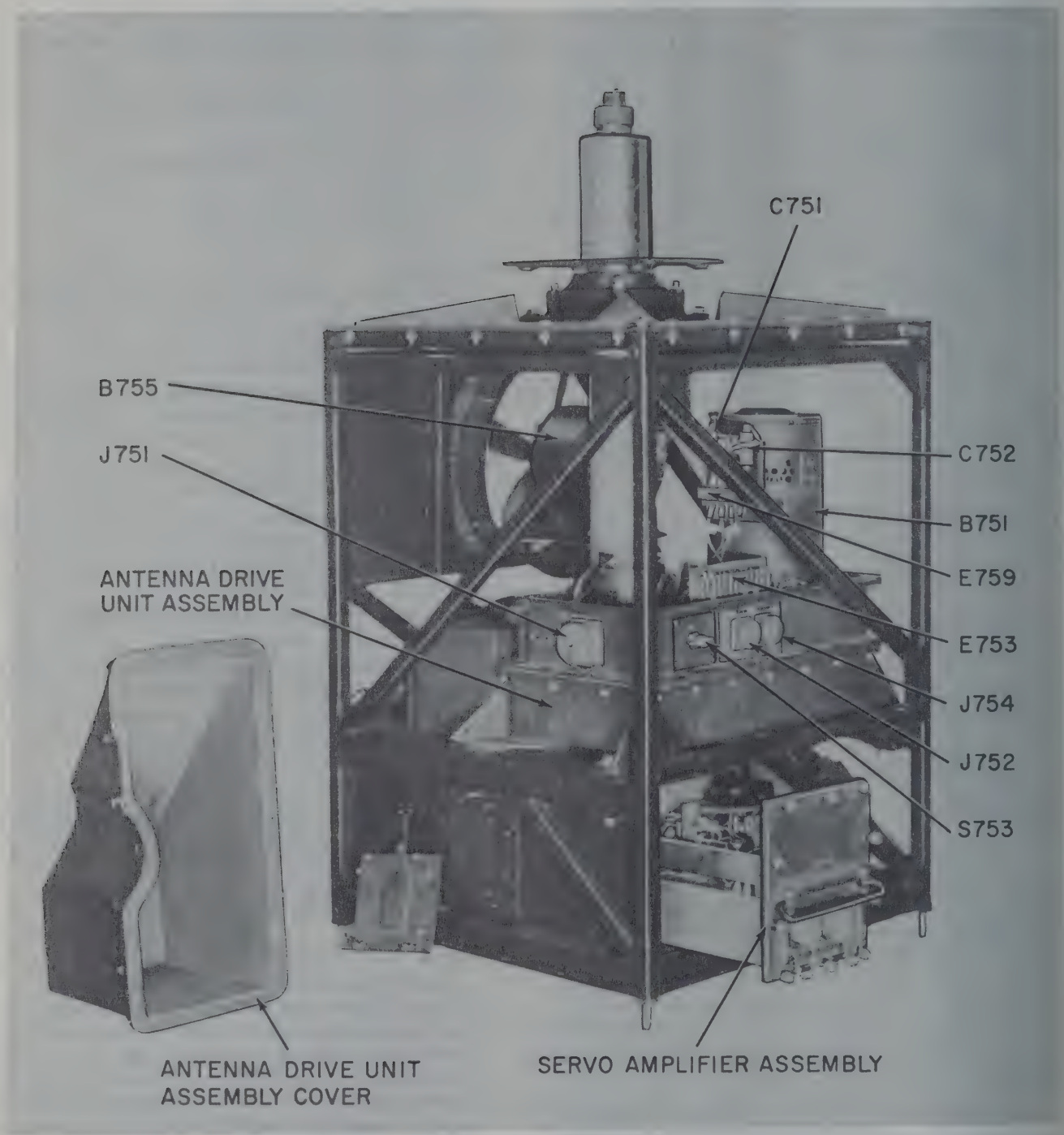

Figure 7—87. Antenna Base Component Locations

(3) RPPI SYNCHRO B753. *(See figure 7–83.)*

It is assumed that the AN/TPS-1G PPI sweep has been aligned, as given in Section 4, paragraph 3.*c.*, and that the RPPI sweep rotates in the same direction and at the same speed as the AN/TPS-1G Antenna.

To adjust B753, proceed as follows:

(*a*) Position the Antenna so that the AN/TPS-1G Indicator PPI sweep is exactly at 0°.

(*b*) Remove the cover of the drive motor subassembly (see figure 7–87).

(*c*) Loosen the four body clamp screws of B753.

(*d*) Carefully rotate the B753 body so that the position of the RPPI sweep is at 0°.

(*e*) Tighten the B753 body clamp and replace the drive motor subassembly cover.

d. DRIVE ASSEMBLY REPAIR OR OVERHAUL.

Figure 7–89 shows details of the RF752 rotary joint for checking and maintenance of electrical contacts. Figure 7–90 shows an exploded view of the antenna drive motor subassembly for general repair and overhaul.

In the procedure which follows, the order of disassembly is such that the rotary joint is disconnected and removed among the first items. After this, the parts are removed in a sequence which is the reverse of the original assembly order. Thus, the procedure can be used to dismantle the assembled parts to the point at which maintenance may be required.

Note

No special tools are required which would not normally be found in a technician's tool box or supplied with the equipment.

The procedure for disassembling the drive motor assembly is as follows (see figure 7–90):

(1) Disconnect all cables to the gear-box assembly.

(2) Remove the four bolts in the top of the spindle

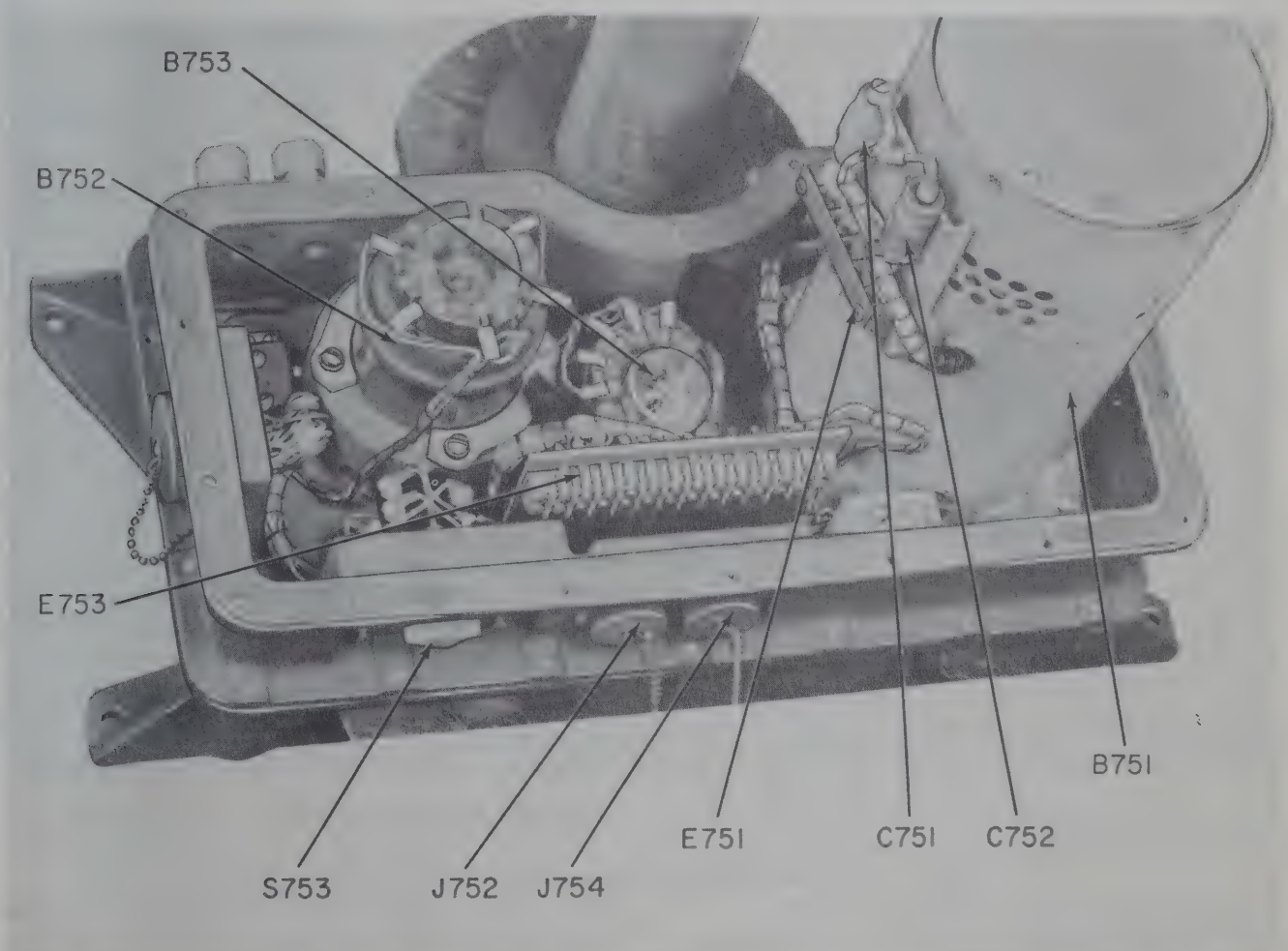

Figure 7–88. Antenna Base Component Locations

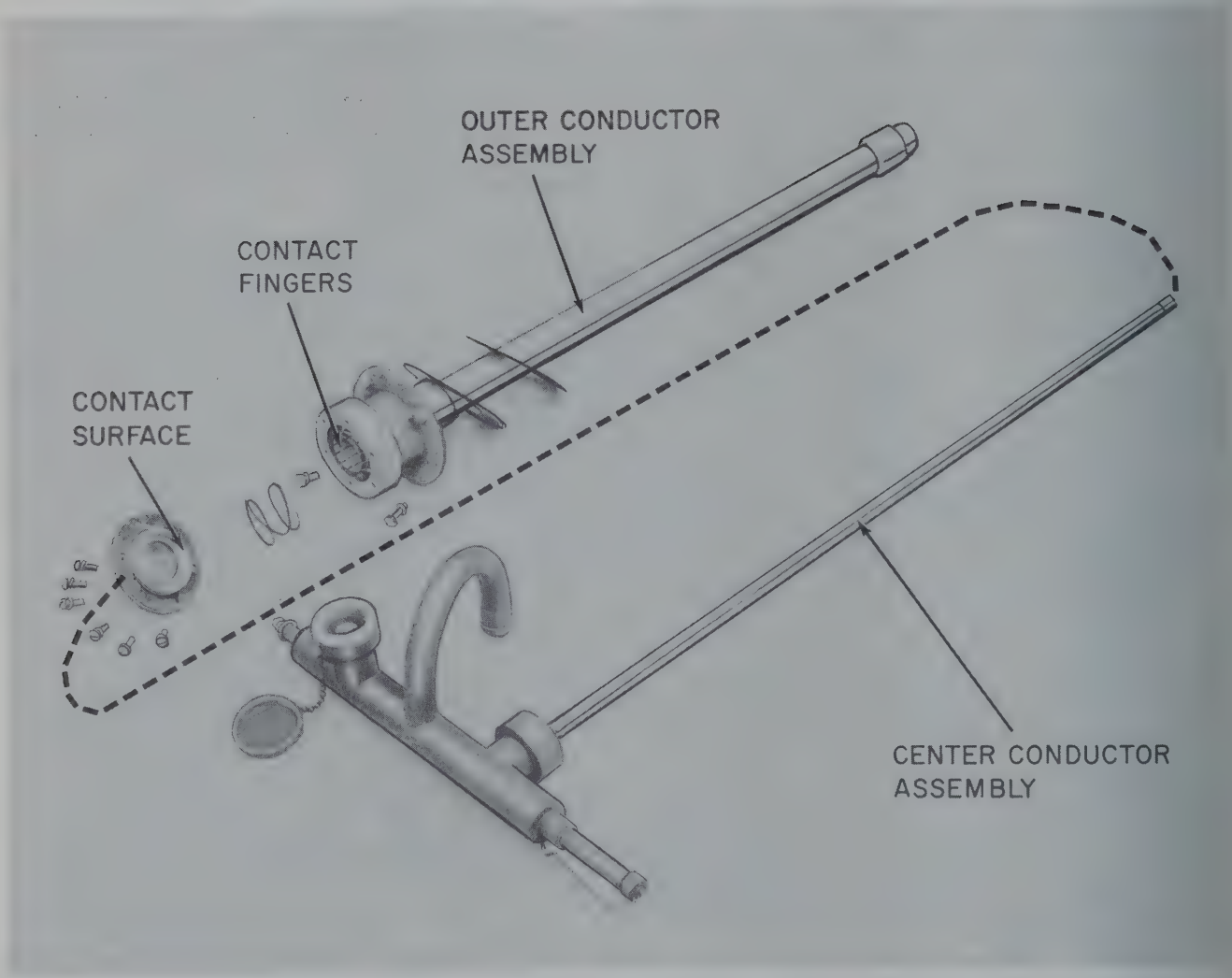

Figure 7—89. Rotary Joint Details

and remove the spindle mounting plate, item 3.

(3) Remove the bolts around the edge of the top plate, item 11, of the antenna base, and remove the four bolts at the center of the plate. Remove the top plate.

(4) Remove the blower motor.

(5) Unscrew the knurled fitting, item 19, which attaches RF751 to the base of the gear-box assembly and carefully withdraw the center conductor, item 18, of the rotary joint.

(6) Remove the four mounting bolts in the feet of the gear-box assembly, and lift the assembly out of the antenna base.

(7) On the underside of the gear-box assembly, remove the four bolts which hold the outer conductor, item 14, of the rotary joint, and carefully withdraw the outer conductor.

(8) Gain access to the contact fingers of the outer conductor by removing the six screws and the end plate, item 17, of the outer conductor.

(9) Remove the gear-box cover, item 20.

(10) Remove leads from the terminal board, item 25. Remove the four bolts from the base of the drive-motor, item 22, and withdraw the motor.

(11) Remove the leads from the synchro transmitter, item 30, remove the ring clamp, item 29, and withdraw the transmitter.

(12) Remove the leads from the synchro transmitter, item 41, remove the ring clamp, item 40, and withdraw the transmitter.

(13) To separate the intermediate housing, item 75, from the base, item 53, remove all bolts fastening the two castings. Insert the bolts (just removed) into tapped holes X, Y and Z and use as jacks to separate castings. Give the bolts several turns in a clockwise direction until the two castings separate slightly. Using a dull tool as a lever, pry the two castings apart still further, then give the bolts several more turns. Repeat this procedure until the bearing, item 73, is free from the intermediate housing.

(14) To remove the spindle assembly, item 81: remove the housing, item 88, gar-lock seal, item 89, packing, item 87, nut, item 86, and washer, item 85. Invert the base and support at both ends in some fashion that allows spindle to hang freely between supports. Place block of wood against bottom end of spindle (now inverted) and tap gently until the spindle is free of the bearing, item 84. Be careful not to let the spindle strike the floor.

11. SYNCHRO SYSTEM ALIGNMENT (Depot).

a. ANTENNA.

(1) Remove all connections to antenna synchro generator B752 and connect a test synchro motor (31TR4) to the synchro generator B752 by connecting R1 to R1, R2 to R2, S1 to S1, S2 to S2, and S3 to S3. The synchro motor (31TR4) is to have a dial mounted on its shaft with a scale 0—360° and located so that a fixed pointer will indicate shaft position in degrees.

(2) Apply 115 volts, 400 cycles to R1—R2.

(3) Rotate the antenna clockwise and record the angles at which the switch S756 opens and then closes.

(4) Rotate the antenna counterclockwise and record the angles at which switch S756 opens and then closes.

(5) Step (3) and step (4) will define two arcs, a portion of each of which will overlap with the other. The arc of each direction of rotation should be 210° plus or minus 24°. If the arcs are outside these limits, S756 should be repositioned until the arcs are within these limits. When the arcs are correct, rotate the antenna until the pointer on the test synchro motor (31TR4) is at the center of the overlap region.

(6) Disconnect the test synchro motor (31TR4) from the synchro generator B752. On the test synchro motor (31TR4), connect S1, S3, and R2 together. Connect R1 and S2 together. Apply 115 volts, 400 cycles to R1-R2 through a 0—10 ampere a-c meter. This voltage should be applied only long enough to read the pointer position of the test synchro (31TR4). (Disconnect power immediately if current remains over 6 amperes as read on the 0—10 ampere a-c meter, and rotate the synchro motor shaft (31TR4) 180° before reconnecting the power.)

(7) Reconnect the test synchro (31TR4) to the antenna synchro B752 as before (see step (1) above) and apply 115 volts, 400 cycles to R1-R2. Loosen the clamps on antenna synchro B752, and turn the body of antenna synchro B752 until the test synchro (31TR4) pointer is at the position determined in step (6) above (electrical zero).

(8) Tighten the clamps on antenna synchro B752, remove the leads connecting it to the test synchro (31TR4), and reconnect B752 to the antenna cabling system provided for B752. The antenna synchro is now correctly aligned.

b. INDICATOR.

(1) Remove all connections to indicator synchro motor B602 and connect a test synchro generator (31TX4) to synchro motor B602 by connecting R1 to R1, R2 to R2, S1 to S1, S2 to S2, and S3 to S3. The synchro generator (31TX4) is to have a dial-scale-pointer assembly identical to that used for the motor (31TR4) under step *a.*(1) above.

(2) Apply 115 volts, 400 cycles to R1-R2.

(3) Rotate the test synchro generator (31TX4) clockwise and record the angles at which the switch S612 closes and then opens.

(4) Rotate the test synchro generator (31TX4) counterclockwise and record the angles at which switch S612 closes and then opens.

(5) Step (3) and step (4) define two arcs, a portion of each of which overlaps with the other. Rotate the test synchro generator (31TX4) until the pointer is at the center of the overlap region. These arcs should never exceed 180°. A good operating arc is about 144° ± 15°.

(6) Disconnect the test synchro generator (31TX4) from indicator-unit synchro motor B602. Remove the clamp and synchro motor B602 completely, being careful not to change the position of the gear train. *This is important.* Connect (on B602) S1, S3, and R2 together. Connect R1 and S2 together. Apply 115 volts 400 cycles through a 0—10 ampere a-c meter to R1-R2. (Disconnect immediately if current remains over 6 amperes, and rotate the shaft of B602 180° before reapplying power.)

(7) With the power on as in step (6) above, reengage the synchro motor B602 without disturbing the gear train, apply and tighten the case clamp.

(8) Disconnect power and all test leads from the indicator-unit synchro motor B602, and reconnect normal indicator synchro leads. This completes the alignment procedure.

12. IFF MAINTENANCE.

a. TROUBLE-SHOOTING.

When trouble-shooting, it is assumed that there are no apparent faults in the IFF equipment itself.

(1) ANTENNA.

Arcing in the IFF system (including the RF feed) usually results in poor triggering of IFF responsers. Hence, either no IFF replies will be received or the IFF replies will be unsteady. It is also likely that the IFF coding will be indefinite.

If poor IFF reception is noted and arcing is suspected, first make certain that the condition is not the fault of a particular responser by checking the replies of at least two responsers.

Next, check the IFF antenna system aurally for arcing, with the AN/TPS-1G shut down and with the IFF equipment operating from its own triggering source.

If arcing is observed, make certain it is not caused by a loose cable fitting or by moisture in a fitting. Burned cable fittings should be carefully cleaned with a knife blade. Do not use abrasives or solvents, as these materials usually leave a residue which is difficult to remove completely.

The antenna system cannot be checked by resistance measurements, due to the use of quarter-wave stub supports for the inner coaxial conductor.

(2) SYNC CIRCUIT.

A defect in the IFF sync circuit can be readily checked as follows:

(*a*) Check the scopes of the azimuth and range indicator for proper sweep triggering.

(*b*) If the triggers for both scopes are missing or erratic, check the trigger source as outlined in table 7—6.

(*c*) If the scope triggering is normal, check R449 (see figure 3—21).

(*d*) If R449 is not defective, check the cable and the cable fitting attached to IFF SYNC jack J418 on the power supply unit.

(3) VIDEO CIRCUIT.

When IFF replies are present at the IFF equipment but are absent or poorly displayed on the PPI scope, trouble is indicated in the IFF video circuit of the AN/TPS-1G equipment. To make such an indication more positive, the radar signals must be normal. The following checks are then suggested:

(*a*) Make certain that the IFF VIDEO gain control, located beneath the CALIBRATION CONTROLS cover on the indicator panel, has not been inadvertently turned fully counterclockwise (see Section 3, paragraph 6.*d.*)

(*b*) Replace V601. (For location, see figure 5—7.)

(*c*) Check the voltage and resistance measurements of V601 (see figure 7—34).

(*d*) Check the video circuit from J417 on the power supply panel to the ungrounded side of IFF VIDEO gain control R610.

(*e*) Check R610 for an open circuit.

(*f*) Check the video cable from the IFF equipment to J417 on the power supply unit.

b. ADJUSTMENTS.

There are only two adjustments of Radio Set AN/TPS-1G required for IFF operation. One is the adjustment of IFF VIDEO gain control R610 (see Section 3, paragraph 6.*d.*) Readjustment of R610 may be required after a long period of operation, due to the aging of V601. If adjustment becomes necessary repeatedly over a short period (200 hours or less), V601 should be replaced and/or the V601 circuit checked.

The other adjustment is the selection of either a 12.4 or 37 microsecond IFF pre-trigger (see Section 3, paragraph 6.*d.*).

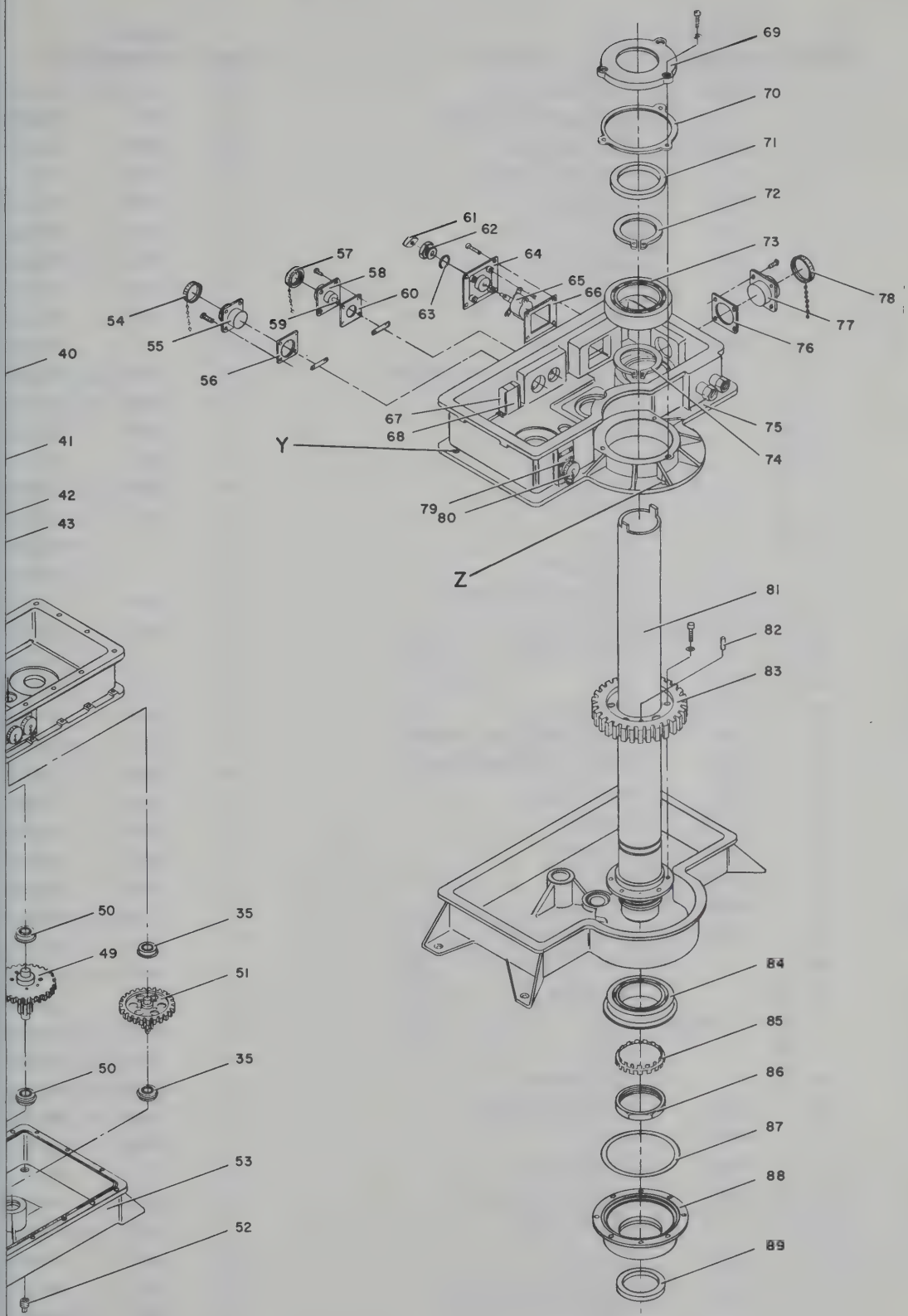

Figure 7—90. Exploded View of Drive Motor Subassembly

NUMBER	SYMBOL DESIGNATION	DESCRIPTION
1	01703	Cap Assembly
2	*	Chain Assembly (382-1020G)
3	0780	Sleeve, Mounting
4	*	Washer (1592-1080P1)
5	0787	Cap, Housing
6	H728	Seal, Oil
7	0785	Bearing, Ball
8	0784	Seal, Oil
9	A718	Housing
10	H716	Fitting, Grease
11	*	Plate Assembly, Top (1592-1086G)
12		Shim
13		Gasket
14		Housing
	p/o RF752	
15		Spring
16		Gasket
17		Coupling, RF
18	RF751	Rotary Joint Inner Conductor
19	p/o RF751	Nut, Coupling
20	*	Cover (CS-1724)
21	MP714	Gasket
22	B751	Motor, Drive
23	C751	Capacitor, Fixed, Paper Dielectric
24	C752	Capacitor, Fixed, Paper Dielectric
25	E751	Terminal Board
26	MP719	Gear, Spur
27	MP756	Key, Machine
28	MP727	Collar, Shaft
29	MP708	Clamp, Ring
30	B753	Synchro Transmitter
31		Hub
32		Plate, Driver
	p/o MP704	
33		Pin, Driver
34		Finger Assembly
35	MP750	Bearing, Ball, Angular
36	MP743	Shaft
37	S756	Switch, Sensitive
38	E760	Insulator, Angle Bracket
39	*	Plate (MS-13343)
40	MP710	Clamp, Ring
41	B752	Synchro, 31TX4P2 or 31TX4A (315-1040)
42	MP720	Gear, Spur
43	MP752	Clamp, "C"

NUMBER	SYMBOL DESIGNATION	DESCRIPTION
44	*	Bracket Assembly (A-19447)
45	E752	Terminal Board
46	MP723	Gear, Spur
47	MP728	Hub
48	MP726	Clamp, "C"
49	MP742	Gear Assembly
50	MP734	Bearing, Ball, Angular
51	MP733	Gear Assembly
52	MP706	Plug, Pipe
53	*	Base (CS-1726)
54	0739	Cover, Electrical Connector
55	J754	Connector, Receptacle, Electrical
56	MP713	Gasket
57	0739	Cap
58	J752A	Shell, Electrical Connector
59	J752	Jack, Telephone
60	*	Gasket (GA-1796)
61	*	Knob (p/o S753)
62	H739	Packing Nut
63	MP711	Gasket
64	*	Patch Plate
65	S753	Switch, Rotary
66	MP711	Gasket
67	MP724	Retainer, Capacitor
68	C753	Capacitor, Fixed, Paper Dielectric
69	MP709	Collar, Shaft
70	MP715	Gasket
71	MP737	Seal, Plain
72	MP748	Ring, Retaining
73	MP731	Bearing, Ball, Angular
74	MP725	Ring, Retaining
75	*	Housing, Intermediate (A-19443)
76	MP712	Gasket
77	J751	Connector, Receptacle, Electrical
78	0743	Cover, Electrical Connector
79	J702	Connector, Receptacle, Electrical
80	0739	Cover, Electrical Connector
81	MP705	Spindle Assembly
82	*	Pin
83	MP722	Gear, Spur
84	MP732	Bearing, Ball, Angular
85	MP751	Washer, Lock
86	MP744	Nut
87	MP736	Packing, Preformed
88	A701	Housing, Gear Box
89	MP735	Seal, Plain

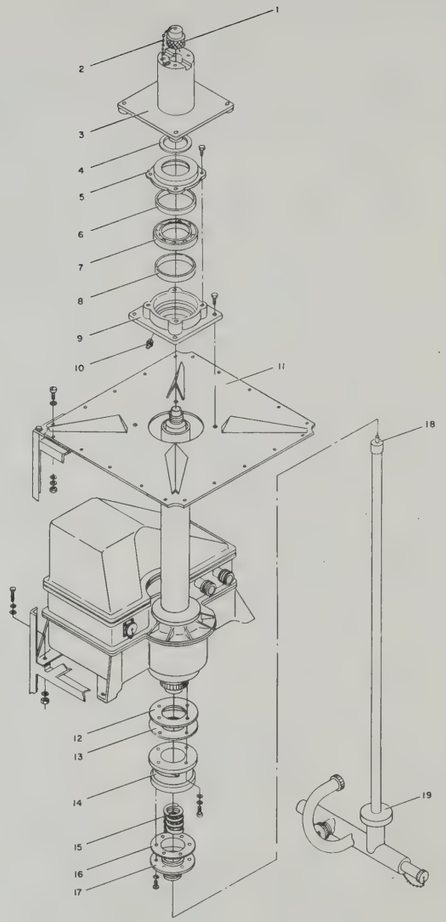

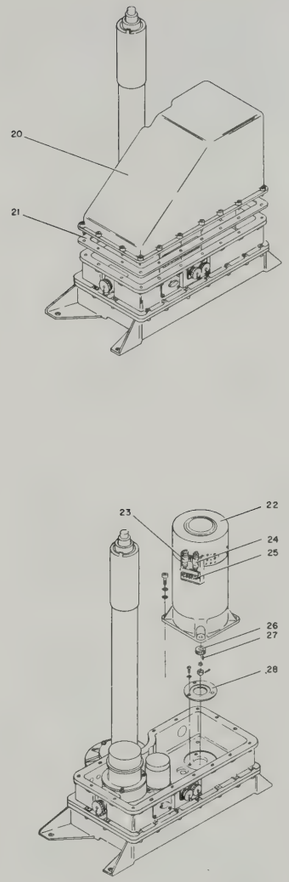

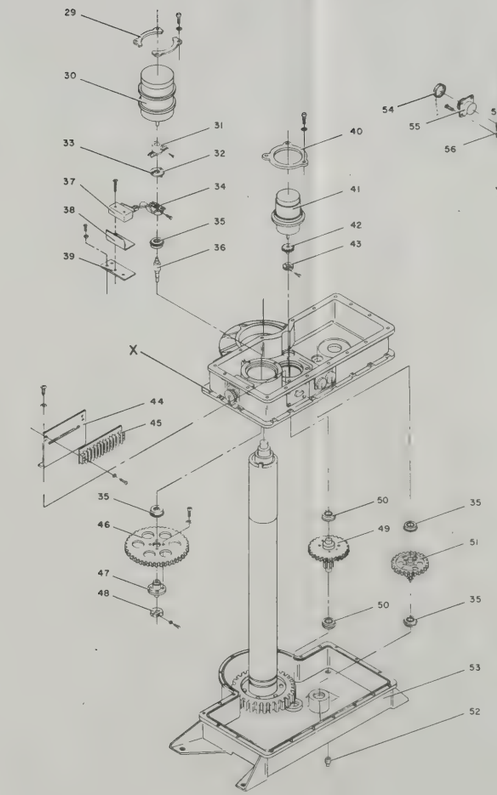

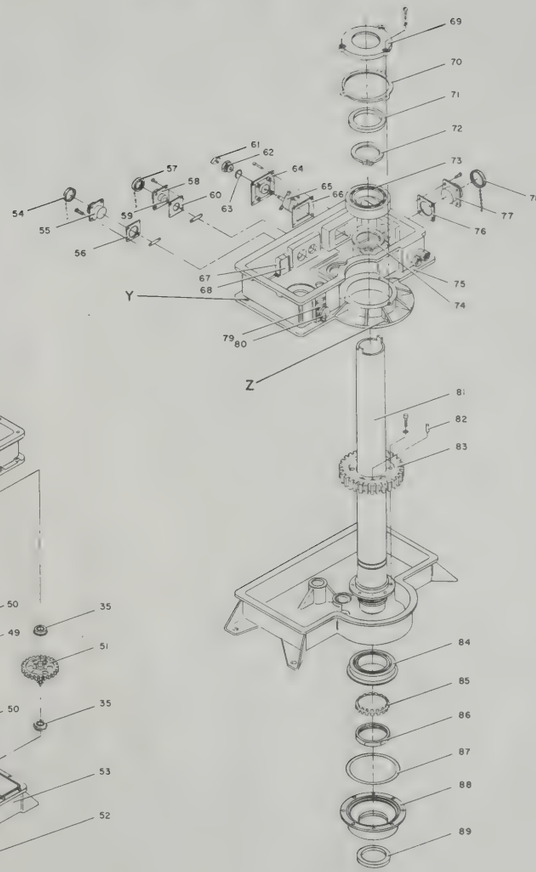

Figure 7-90. Exploded View of Drive Motor Subassembly

SECTION 8
PARTS LISTS

1. INTRODUCTION.

Reference designations (sometimes referred to as circuit symbols, reference symbols, etc.) have been assigned to each significant electrical and mechanical part of the equipment for which a replacement may be required or to which a reference is made in the drawings and text of the associated instruction book. The letters of a reference designation indicate the kind of part such as resistor (R), electron tube (V), fuse (F), etc. Parts of major units are assigned numbers in blocks of 100 and are shown in Tables 8–1 and 8–3. In some instances separate series of numbers may be assigned to parts of one major unit where there are more than one hundred parts, or for specific circuit identification purposes. In such cases they are not necessarily of a consecutive numerical series. Sockets associated with a particular plug-in device, such as an electron tube or a fuse, are identified by a reference designation of the plug-in device. For example, the socket for tube V402 is designated XV402.

2. LIST OF MAJOR UNITS.

Table 8–1 lists the major units and includes the following columns:

Column 1 headed "Reference Designation" lists the group of reference designations that apply to the major unit. They are listed in numerical order.

Column 2 headed "Quantity" lists the quantity of units per set.

Column 3 headed "Name of Major Unit" lists the standard item name assigned by the Bureau. It is listed in normal sequence, not in reverse. For example: Radar Modulator not Modulator, Radar.

Column 4 headed "Designation", lists the assigned Bureau designation. For example: RT-212A/TPS-1D.

Column 5 headed "Colloquial Name" lists the Bureau approved colloquial name.

Column 6 headed "Page" indicates the page number (of the Maintenance Parts List Table) where the listing of the major unit's parts begin.

3. LIST OF MAJOR UNITS BY COLLOQUIAL NAME.

Table 8–2 is a list of major units by colloquial name and includes the following columns.

Column 1 headed "Colloquial Name" lists the Bureau approved colloquial name, in alphabetical order.

Column 2 headed "Nomenclature" lists the standard item name followed by its designation. For example: Radar Receiver-Transmitter RT-212A/TPS-1D.

Column 3 headed "Page" indicates the page number (of the Maintenance Parts List Table) where the listing of the major unit's parts begin.

4. MAINTENANCE PARTS LIST.

Table 8–3 lists the major unit with the associated maintenance parts.

Column 1 lists the reference series of the major unit followed by the reference designations of the various parts in alphabetical and numerical sequence.

Column 2, NOTES. – Uses letter code designations listed below, to refer to "support information" and other information required by the Bureau.

A. Fabricate locally from bulk material under FSN.

B. For replacement use FSN.

C. Low failure item – if required requisition from ESO referencing NavShips 900-180A.

D. Assemble from component parts.

E. For reference only.

F. Shop manufacture.

Column 3 includes the name and description of the various items. Information classified higher than the parts list has been omitted. Complete information is provided for all key parts (a part that differs from any part previously listed in the table) and sub-key parts (a part that is identical to key part, but appears for the first time for a given major unit). The name and description is omitted for other parts. However, reference is made to the key part or sub-key part for the data.

Column 4 indicates how the part is used and provides its functional location in the equipment.

5. STOCK NUMBER IDENTIFICATION.

Table 8–4 lists the key designations and stock numbers of replaceable parts.

Column 1, Reference Designation – Lists the key designations of all parts for which stock numbers are required under the terms of the contract.

Column 2, Stock Numbers – This column is divided into four sub-columns headed: FEDERAL, STANDARD NAVY, SIGNAL CORPS, and AIR FORCE.

6. STOCK NUMBER CROSS REFERENCE.

Table 8–5 gives stock numbers for the various items.

7. LIST OF MANUFACTURERS.

Table 8–6 lists manufacturers of parts used in the equipment. The prefix letters are those assigned by the Bureau of Ships to identify the manufacturers, on identification plates (name plates) and on small parts.

TABLE 8–1. LIST OF MAJOR UNITS

REFERENCE DESIGNATION	QUANTITY	MAJOR UNIT	DESIGNATION	COLLOQUIAL NAME	PAGE
1-99 Series		Miscellaneous Parts and Interconnecting Cables			8–3
101-199 Series	1	Radar Modulator	MD-144A/TPS-1D	Modulator	8–20
101-199 Series	1	Tuned Cavity	TS-172B/UP	Echo Box	(See NavShips 92920)
201-299 501-599 Series	1	Radar Receiver-Transmitter	RT-212A/TPS-1D	Receiver Transmitter	8–49
301-399 1301-1399 2301-2399 3301-3399 Series	1	Signal Comparator	CM-36A/TPS-1D	Signal Comparator	8–91
401-499 Series	1	Power Supply	PP-674A/TPS-1D	Power Supply	8–137
601-699 1601-1699 2601-2699 Series	1	Azimuth, Range Indicator	IP-141A/TPS-1D	Indicator	8–169
701-799 1701-1799 Series	1	Antenna Base	AB-498/TPS-1G	Antenna Base	8–221
801-899 Series	1	Antenna	AS-673/TPS-1E	Antenna	8–247
2401-2499 Series	1	Variable Power Transformer	TF-238/U	System Variac	8–253
4301-4399 Series	1	Signal Comparator Test Set	TS-1002/TPS-1G	Test Meter	8–255

TABLE 8–2. LIST OF MAJOR UNITS BY COLLOQUIAL NAME

COLLOQUIAL NAME	NOMENCLATURE	PAGE
Antenna	Antenna AS-673/TPS-1E	8–247
Antenna Base	Antenna Base AB-498/TPS-1G	8–221
Echo Box	Tuned Cavity TS-172B/UP	(See NavShips 92920)
Indicator	Azimuth, Range Indicator IP-141A/TPS-1D	8–169
Modulator	Radar Modulator MD-144A/TPS-1D	8–20
Power Supply	Power Supply PP-674A/TPS-1D	8–137
Receiver-Transmitter	Radar Receiver-Transmitter RT-212A/TPS-1D	8–49
Signal Comparator	Signal Comparator CM-36A/TPS-1D	8–91
System Variac	Variable Power Transformer TF-238/U	8–253
Test Meter	Signal Comparator, Test Set TS-1002/TPS-1G	8–255

TABLE 8-3. MAINTENANCE PARTS LIST

REF. DESIG.	NOTES	NAME AND DESCRIPTION	LOCATING FUNCTION
1-99 Series		Miscellaneous Parts and Interconnecting Cables.	
A1 thru A10		Not used.	
A11	C	PLATE BASE, TOWER SUPPORT: to support tower mount; stainless steel, passivated finish, USMC green; sq shape, over-all dim. 6 in. lg by 6 in. w by 0.188 in. thk; four 9/16 in. dia holes equally spaced on 4 in. dia circle; six 0.221 in. dia holes equally spaced on 2 in. dia circle; Hazeltine Elec (mfr and contr) part 1620-1039P1.	Mounting for O26
A12	C	BASE, MAST: for supporting tower; aluminum, anodized, USMC green; two 1-13/32 in. dia holes countersunk 82 deg by 1-1/2 in. dia on 26-1/2 in. mtg centers, incl two 5/8 in. dia through holes countersunk 82 deg by 7/8 in. dia spaced 22 in. c to c; Hazeltine Elec (mfr and contr) part 1620-1032G1.	Tower mounting bracket for O26
BT1		BATTERY DRY: 1.5 v; 2-3/8 in. lg by 1-5/16 in. dia; Spec MIL-B-18B, type BA-30; Hazeltine Elec (mfr and contr) part 321-1016P1.	Battery for O43
E1 thru E12		Not used.	
E13		ADAPTER, ELECTRON TUBE SOCKET: for testing octal base tubes; arc resistant plastic; over-all dim. 1-15/16 in. lg by 1-1/2 in. dia; Alden Products Co (mfr) part 988STTO; Hazeltine Elec (contr) part 282-1040P1.	For testing octal base tubes
E14		ADAPTER, ELECTRON TUBE SOCKET: for testing 7 pin miniature tubes; arc resistant plastic; over-all dim. 1-13/32 in. lg by 1 in. dia; Alden Products Co (mfr) part 97STMIN; Hazeltine Elec (contr) part 282-1041P1.	For testing tubes
E15		ADAPTER, ELECTRON TUBE SOCKET: for testing 9 pin miniature tubes; arc resistant plastic; over-all dim. 1-1/2 in. lg by 1.140 in. dia; Alden Products Co (mfr) part 999STMIN; Hazeltine Elec (contr) part 282-1042P1.	For testing tubes
E16		ADAPTER, CABLE TO CONNECTOR: 1.570 in. cable opening dia; couples to connector by inside thd, 2 in.-18 thd; metallic, resistant to corrosion; over-all dim. 1-1/16 in. lg by 2-1/8 in. dia; AN type, AN3055-36-24; Hazeltine Elec (mfr and contr) part 276-1106P53.	For W8
E17		ADAPTER, CABLE TO CONNECTOR: 1.060 in. cable opening dia; couples to connector by inside thd, 1-7/16 in.-18 thd; metallic, resistant to corrosion; over-all dim. 7/8 in. lg by 1-9/16 in. dia; AN type, AN3055-28-16; Hazeltine Elec (mfr and contr) part 276-1106P47.	For W7
E18		ADAPTER, CABLE TO CONNECTOR: 1.315 in. cable opening dia; couples to connector by inside thd, 1-3/4 in.-18 thd; metallic, resistant to corrosion, over-all dim. 15/16 in. lg by 1-7/8 in. dia; AN type, AN3055-32-20; Hazeltine Elec (mfr and contr) part 276-1106P50.	For W1

TABLE 8-3. MAINTENANCE PARTS LIST — Cont'd.

REF. DESIG.	NOTES	NAME AND DESCRIPTION	LOCATING FUNCTION
E19		Same as E16.	For W8
E20		Same as E17.	For W7
E21		Same as E17.	For W12
E22		Same as E17.	For W12
E23		Same as E17.	For W10
E24		Same as E17.	For W10
E25		Same as E17.	For W10A
E26		Same as E17.	For W10A
E27		Same as E18.	For W1
E28		Same as E18.	For W11
E29		Same as E18.	For W11
E30	E	Same as E18; for reference only.	For W11A
E31	E	Same as E18; for reference only.	For W11A
E32		Same as E18.	For W15
E33		Same as E18.	For W16
E34	B	ADAPTER, CONNECTOR: 2 contacts; 2 connector mating end; 1 male contact, coaxila plain type, 52 ohms; 1 female contact, coaxial plain type, 52 ohms; low loss plastic dielectric; straight shape; over-all dim. 1-5/8 in. max lg by 3/4 in. dia; copper base alloy, resistant to corrosion, precious metal plated; locking type; 5/8 in.-24 NEF-2 thd coupling nut; bayonet latch type other end; AN type UG-201/U; Industrial Products Co (mfr) part 1400; Hazeltine Elec (contr) part 276-1262P1.	Coaxial termination
E35		ADAPTER, CONNECTOR: 2 contacts; 2 connector mating ends; 2 female contacts, coaxial plain type, 52 ohms; low loss plastic material; straight shape; over-all dim. 1-3/4 in. lg by 21/32 in. dia; w/inclosing shell, copper base alloy, resistant to corrosion, precious metal plated; locking type 5/8 in.-24 NEF-2 thd on shell for mating w/coupling nut on both ends; Spec MIL-C-71A, AN type UG-29B/U; Diamond Instrument Co (mfr) part 979-1; Hazeltine Elec (contr) part 276-1312P1.	Coaxial termination
E36	B	ADAPTER, CONNECTOR: 2 contacts; 2 connector mating end; 1 male contact, coaxial plain type, 52 ohms; 1 female contact, coaxial plain type, 52 ohms; low loss plastic dielectric; straight shape; over-all dim. 1-27/32 in. max lg by 5/8 in. dia; w/inclosing shell, copper base alloy, resistant to corrosion, precious metal plated; locking type; 5/8 in.-24 NEF-2 thd on shell for mating w/coupling nut; bayonet latch type on other end; AN type UG-349/U; Diamond Instrument Co (mfr) part 1035-1; Hazeltine Elec (contr) part 276-1311P1.	Coaxial termination

TABLE 8-3. MAINTENANCE PARTS LIST — Cont'd.

REF. DESIG.	NOTES	NAME AND DESCRIPTION	LOCATING FUNCTION
E37 thru E39		Not used.	
E40		Same as E18.	For W20
E41		Same as E18.	For W20
E42 and E43		Not used.	
E44	C	ROD, GROUND: steel, 30 in. lg by 5/8 in. dia; cone point; Hazeltine Elec (mfr and contr) part 1594-1017P1.	Equipment grounding
E45		Not used.	
E46	C	LEAD, ELECTRICAL: no. 8 AWG, stranded, copper; approx 72-1/2 in. lg over-all; one terminal lug on ea end; Hazeltine Elec (mfr and contr) part 1594-1018G1.	Used with grounding rod
E47	C	LEAD, ELECTRICAL: copper, braided; 7 in. lg over-all; one terminal fitting on ea end, Patton-MacGuyer Co, solder terminal, part 2050; wire tinned; Hazeltine Elec (mfr and contr) part 1594-1016G1.	Inter-unit ground
E48		Not used.	
E49	C	TERMINAL, LUG: rd tongue; 0.407 in. dia for wire accommodated; over-all dim. 1-3/4 in. lg by 3/4 in. w by 1/2 in. h; Hazeltine Elec (mfr and contr) part 227-1079P7.	For W15
E50		Same as E49.	For W15
E51		Same as E49.	For W16
E52		Same as E49.	For W16
H1 thru H10		Not used.	
H11	C	NUT, PLAIN, WING: stainless steel; 1/4 in.-20 NC-2; 9/16 in. h over-all; 1-1/8 in. wing spread; American Air Filter Co (mfr) "wing nut" size 1/4 in.; Hazeltine Elec (contr) part 203-1050P5.	Secures cover to O39
H12	C	BOLT, SHOULDER: non-magnetic corrosion resisting steel, Spec MIL-S-853; passivated finish; head data, hexagon washer; dim. data 0.242 in. max h of head by 0.500 in. max w across flats; 7/16 in. dia of washer by 1/64 in. thk of washer; shoulder data 0.314 in. max dia by 1-15/16 in. lg; 1/4 in.-20 NC-2 thd, 15/16 in. lg; 2-1/4 in. lg over-all; Hazeltine Elec (mfr and contr) part 1594-1069P1.	For RF854
H13		ADAPTER, CABLE TO CONNECTOR: 1-1/4 in. cable opening dia; couples to connector by inside thd, 1-3/4 in.-18 thd; metallic, resistant to corrosion; over-all dim. 1-3/32 in. lg by 2-1/32 in dia; AN type, AN3057-20A; Hazeltine Elec (mfr and contr) part 1594-1051P1.	For W15 and W16
H14		Not used.	

TABLE 8-3. MAINTENANCE PARTS LIST — Cont'd.

REF. DESIG.	NOTES	NAME AND DESCRIPTION	LOCATING FUNCTION
H15		ADAPTER, CABLE TO CONNECTOR: 15/16 in. min cable opening dia; couples to connector by inside thd, 1-7/16 in. -18 thd; metallic, resistant to corrosion; over-all dim. 1-5/16 in. max lg by 1-7/8 in. max dia; AN type, AN3057-16; Hazeltine Elec (mfr and contr) part 214-1018P6.	For W7, W10 and W12
H16		ADAPTER, CABLE TO CONNECTOR: 1-1/4 in. min cable opening dia; couples to connector by inside thd, 1-3/4 in. -18 thd; metallic, resistant to corrosion; over-all dim. 1-9/16 in. max lg by 2-5/16 in. max dia; AN type, AN3057-20; Hazeltine Elec (mfr and contr) part 214-1018P7.	For W1, W11 and W11A
H17		Not used.	
H18	C	STRAP, RETAINING: 2 holes; bronze; 1.64 in. nom cable size; one 0.316 in. dia hole 1-3/4 in. lg and one 10-24 tapped hole; nom dia. data, 0.820 in. h from base to inside of arch by 1.64 in. inside dia of arch by 2-7/8 in. distance between mtg holes; Hazeltine Elec (mfr and contr) part 1594-1038P1.	For RF854
H19	C	STUD, LOCK PIN FASTENER: wing type; for miscellaneous parts case; steel, cadmium plated; head 0.875 in. across wing by 0.375 in. w by 0.350 in. lg from mtg surface to locking position; locking bayonet type mtg; Spec MIL-F-5591; Dzus Fastener Co (mfr) part AW3-1/2T12; Hazeltine Elec (contr) part 373-1034P10.	For O39
H20	C	STUD, LOCK PIN FASTENER: for chassis panels; carbon steel, cadmium plated; 1.062 in. lg by 0.562 in. w by 0.385 in. h over-all; 2 mtg holes 0.193 in. dia on 0.750 in. mtg centers; Dzus Fastener Co (mfr) part RF3-1/2; Hazeltine Elec (contr) part 373-1010P3.	For O39
H21	C	EYELET, TURNLOCK FASTENER: hard aluminum; rd, 0.218 in. id by 0.375 in. od by 0.025 in. material thk; Spec ANF8-b; Dzus Fastener Co (mfr) GH3-1/2; Hazeltine Elec (contr) part 373-1011P1.	For O39
H22	C	TOOL KIT, ELECTRICIAN'S: equipment installation and repair kit; c/o 1 universal chuck type handle part 3801, 1 ream awl part 3802, 1 screwdriver w/1/8 in. blade part 3803, 1 screwdriver w/3/16 in. blade part 3804, 1 screwdriver w/1/4 in. blade part 3805, 1 spintite socket wrench size 3/16 in. part 3806, 1 spintite socket wrench size 1/4 in. part 3808, 1 spintite socket wrench size 5/16 in. part 3810, 1 spintite socket wrench size 11/32 in. part 3811, 1 spintite socket wrench size 3/8 in. part 3812, 1 spintite socket wrench size 7/16 in. part 3814, 1 spintite socket wrench size 1/2 in. part 3816, 1 spintite socket wrench size 5/8 in. w/wood handle part 3420, 1 pr 5 in. cutting pliers part 4601, 1 pr 6 in. lg nose pliers, 1 plastic roll folding type, 1 plastic neutralizing and alignment tool, 1 Allen wrench for no. 6 cap screw, 1 Allen wrench for no. 8 cap screw, 1 Allen wrench for 1/4 cap screw, 1 Allen wrench for 3/8 cap screw; Stevens Walden Inc (mfr) type T-52 modified; Hazeltine Elec (contr) part 318-1005G2.	Equipment installation and repair tools
H23		WRENCH, PIPE: single head; material and finish per Fed Spec GGG-W-651b; for pipe or tubing size 1/8 in. to 2 in. dia; straight type handle; 12 in. lg over-all; Fed Spec GGG-W-651b, type V; Reed Mfg Co (mfr) part 6625; Hazeltine Elec (contr) part 318-1015P1.	Installation accessory
H24		Not used.	

TABLE 8-3. MAINTENANCE PARTS LIST — Cont'd.

REF. DESIG.	NOTES	NAME AND DESCRIPTION	LOCATING FUNCTION
H25	C	PLIERS, SLIP JOINT: installation accessory; steel, nickel finish; 8 in. lg over-all; Utica Tool Works (mfr) type 8; Hazeltine Elec (contr) part 318-1014P1.	Installation accessory
H26	C	HATCHET, HALF: 1 lb 5 oz wt of head; 3-5/8 in. w cutting edge; 13-1/2 in. lg of handle; Fed Spec GGG-H-131a, type C; Fayette R Plumb Co (mfr) part 2962; Hazeltine Elec (contr) part 218-1017P1.	Installation accessory
H27	C	KNIFE, POCKET: electricians folding type; cutlery steel blades; 3-3/4 in. lg closed; 1 blade 2-3/4 min lg, 1 blade w/screwdriver tip 2-3/8 in. min lg; approx 3/4 in. w by 5/8 in. thk wood handle; automatic locking; incl chain clevis; Sig type TL-29; Hazeltine Elec (mfr and contr) part 218-1019P1.	Installation accessory
H28		SCREWDRIVER, FLAT TIP: 3/16 in. w by 3/64 in. thk tip, straight sides; 3/16 in. sq shape; 6 in. lg blade, steel; plastic handle; 9 in. over-all lg; AN type TL-360/U; Stevens Walden (mfr) part C306; Hazeltine Elec (contr) part 318-1016P4.	Installation accessory
H29		SOLDERING IRON ELECTRIC: pyramid shape tip; thd type fastening; 1/4 in. dia tip; 115 v ac, 125 w, 400 cycles w/6 ft cord; Bead Chain Mfg Co (mfr) part 86R-G2; Hazeltine Elec (contr) part 318-1020G2.	Installation accessory
H30	C	TIP, ELECTRIC SOLDERING IRON: straight tip; copper; over-all dim. 2-3/8 in. lg by 5/8 in. dia; pyramid shape point; Bead Chain Mfg Co (mfr) part 86R-T-P2; Hazeltine Elec (contr) part 218-1020P2.	Installation accessory
H31	F	PIN, STRAIGHT, HEADED: mtg base retaining pin; 11 in. lg approx; Hazeltine Elec (mfr and contr) part 1620-5004G1; (incl H49, MP9 and MP11).	Mounting base retaining pin
H32	C	NUT, PLAIN, HEXAGON: brass; cadmium plated, USMC green; semi-finished, flat surface; 1-3/8 in.-12 NF-2 thd size; 1-3/4 in. w across flats; 1/4 in. thk; 6-32 NC-2 hole drilled in one corner; Hazeltine Elec (mfr and contr) part 1620-1035P1.	For O26
H33	C	PIN, STRAIGHT, THREADED: for tower mtg base; stainless steel, passivated finish; rd post type; over-all dim. 4-7/8 in. lg by 1 in. dia, w/1 in.-5 Acme thd, ea end undercut to 0.750 in. dia, two 0.386 in. dia holes spaced 3-1/4 in. c to c; spherical knob 0.750 in. dia one end; Hazeltine Elec (mfr and contr) part 1620-1037P1.	Adjusting post for O26
H34	C	WRENCH, SOCKET: corrosion resistant steel; 7/16 in. size; for 12 and 1/4 in. nut size; unbreakable plastic straight rd handle; 3-1/4 in. min lg, 3-3/4 in. max lg; Stevens Walden Inc (mfr) part 4414; Hazeltine Elec (contr) part 318-1024P6.	Installation accessory
H35		ADAPTER, CABLE TO CONNECTOR: 1-3/8 in. min cable opening dia; couples to connector by inside thd, 2 in.-18 thd; metallic, resistant to corrosion; over-all dim. 1-5/8 in. max lg by 2-3/4 in. max dia; AN type, AN3057-24; Hazeltine Elec (mfr and contr) part 214-1018P9.	For W8
H36		STUD, SNAP FASTENER: button for dot fastener; brass, dull nickel plated; 39/64 in. dia by 5/16 in. lg over-all; pressure mounted; head 1/8 in. thk shank 5/32 in. dia by 3/16 in. lg; United Carr Fastener Corp (mfr) part 670; Hazeltine Elec (contr) part 373-1046P1.	For O34

TABLE 8-3. MAINTENANCE PARTS LIST — Cont'd.

REF. DESIG.	NOTES	NAME AND DESCRIPTION	LOCATING FUNCTION
H37	C	SOCKET, SNAP FASTENER: brass, dull nickel plated; rd; 9/16 in. dia by 5/32 in. thk w/center hole 11/64 in. dia; pressure mounted; United Carr Fastener Corp (mfr) part C548; Hazeltine Elec (contr) part 373-1036P1.	For O34
H38		GROMMET, METALLIC: black on brass; 1.06 in. lg by 0.83 in. w by 0.31 in. h over-all; w/oval center hole 0.583 in. max lg by 0.348 in. max w; oval shape w/2 mtg prongs; incl washer 1.01 in. lg by 0.77 in. w by 0.015 in. thk; United Carr Fastener Corp (mfr) part 400 w/ washer part 400A; Hazeltine Elec (contr) part 1697-1011G1.	For O34
H39	C	STUD, SNAP FASTENER: for dot fastener; black on brass; irregular shape; 3/4 in. lg by 1/2 in. w by 1-1/32 in. h over-all; w/2 fastening prongs 5/16 in. lg spaced 1/2 in. apart; incl washer 13/16 in. lg by 9/16 in. w by 1/64 in. thk; United Carr Fastener Corp (mfr) part B410 w/washer part 410A; Hazeltine Elec (contr) part 1697-1012G1.	For O34
H40	C	WRENCH, OPEN END, FIXED: double open end for installation; steel, chrome plated, heads ground and polished; 1/2 in. and 9/16 in. openings, 6-1/4 in. approx lg, 15/64 in. approx head thk; head offset 15 deg; straight handle; Stevens Walden, Inc (mfr) part 1725B; Hazeltine Elec (contr) part 318-1026P8.	Installation accessory
H41	C	WRENCH, OPEN END, FIXED: double open end for installation; steel, chrome plated, heads ground and polished; 3/4 in. and 13/16 in. openings by 9 in. approx lg by 11/32 in. approx head thk; head offset 15 deg; straight handle; J.H. Williams & Co (mfr) part 1731; Hazeltine Elec (contr) part 318-1026P18.	Installation accessory
H42		INSULATION TAPE, ELECTRICAL: cotton impregnated, black, friction rubber finish, adhesive; 1000 v min dielectric strength; roll; dim. 3/4 in. w by 82-1/2 ft lg by 0.015 in. nom thk; Fed Spec HH-T-101A; Hazeltine Elec (mfr and contr) part 253-1008P1.	Installation accessory
H43		SOLDER, LEAD-TIN ALLOY: wire form; soft; 60% tin, 40% lead; rosin cored; 1/16 in. dia; one lb spool; Fed Spec QQ-S-571B, Composition SN60; Hazeltine Elec (mfr and contr) part 316-1002P4.	Installation accessory
H44		SOLDER, LEAD-TIN ALLOY: wire form; soft; 60% tin, 40% lead; rosin cored; 3/16 in. dia, one lb spool; Fed Spec QQ-S-571B, Composition SN60; Hazeltine Elec (mfr and contr) part 316-1002P5.	Installation accessory
H45	C	STRAP, RETAINING: 3 snap type fasteners at ea end; olive drab cotton webbing; 36 in. lg by 2 in. w; Hazeltine Elec (mfr and contr) part 1594-1044G3.	For shelter
H46	C	STRAP, RETAINING: 3 snap type fasteners at ea end; olive drab cotton webbing; 30 in. lg by 2 in. w; Hazeltine Elec (mfr and contr) part 1594-1044G2.	For shelter
H47	C	LEVER: for magnetron retaining ring; annealed stainless steel, passivated finish; cylindrical shape; over-all dim. 6 in. lg by 5/8 in. dia; 1 end undercut to 0.245 in. max dia by 3/8 in. lg; 45 deg chamfer both ends; Hazeltine Elec (mfr and contr) part 1594-1049P1.	For V502
H48	C	HOOK: tower assembly tool; corrosion resisting steel, USMC green; irregular shape, over-all dim. 7-1/8 in. lg by 1 in. w by 3 in. deep by 1/4 in. thk; Hazeltine Elec (mfr and contr) part 1594-1065P1.	For tower assembly

TABLE 8-3. MAINTENANCE PARTS LIST — Cont'd.

REF. DESIG.	NOTES	NAME AND DESCRIPTION	LOCATING FUNCTION
H49	C	PIN, STRAIGHT, HEADED: stainless steel, MIL Spec, MIL-S-853A, class 7, type A; 75,000 psi min tensile strength; passivated finish; head data, bevel, 0.281 in. dia of head, 3/16 in. h of head; shank data, 0.281 in. nom dia by 2 in. nom grip lg by 3/32 in. radius for both undercuts by 2-11/16 in. nom lg under head, 0.157 in. dia hole spaced 3/16 in. from end; Hazeltine Elec (mfr and contr) part 1620-1040P1.	For H31
MP1	C	MIRROR, VIEWFINDER: used as tuning aid; polished brass; c/o 1 brass chromium plated block, 4 rivets; octagonal shape; 7 in. lg by 5 in. w by 3/8 in. h; 4 mtg holes 8-32 NC-2 thd spaced on 1-1/2 in. by 1-1/4 in. centers; Hazeltine Elec (mfr and contr) part/dwg A-19064.	Tuning aid
MP2	C	CLAMP MIRROR: secures tune-up viewing mirror; stainless steel, type 302; passivate finish; 5-7/8 in. lg by 5-9/16 in. w by 2 in. h over-all; irregular shape; Hazeltine Elec (mfr and contr) part/dwg CP-1395.	Clamp for tune-up mirror
MP3	C	PLATE MOUNTING, MIRROR CLAMP: brass; cadmium plated; rectangular shape; 2-3/8 in. lg by 1-1/4 in. w by 5/16 in. h by 0.045 in. material thk; four 0.196 in. dia mtg holes on 1-1/2 in. by 7/8 in. mtg centers; Hazeltine Elec (mfr and contr) part/dwg MS-13036.	Secures MP2
MP4	C	CLIP, SPRING TENSION: holds mirror clamp; 0.025 in. thk; phosphor bronze, spring temper, cadmium plated; 1-7/16 in. lg by 9/32 in. w; Hazeltine Elec (mfr and contr) part/dwg SP-1604.	For tuning mirror
MP5	C	CLIP, SPRING TENSION: holds mirror clamp; 0.025 in. thk; phosphor bronze, spring temper, cadmium plated; 15/16 in. lg by 9/32 in. w; Hazeltine Elec (mfr and contr) part/dwg SP-1602.	For tuning mirror
MP6		Not used.	
MP7	C	BAG, PLASTIC: polyvinyl chloride; single compartment; USMC green; 9-1/2 in. lg by 7 in. w by 3-1/2 in. deep; open top, slit at one end 2 in. lg, tied w/nylon cord, tips are wound w/cotton twine, 3/8 in. min lg; all joints are sealed; Hazeltine Elec (mfr and contr) part/dwg BA-1073.	For tuning mirror
MP8	C	ADAPTER, CABLE CLAMP TO CONNECTOR: aluminum, black anodized finish; 1/2 in. lg over-all; 1-3/4-18 external thd, 1-7/16-18 internal thd; Hazeltine Elec (mfr and contr) part 1594-1011P1.	For W15, W16 and W20
MP9	F	RING, RETAINING: stainless steel, AISI 302 annealed; 1.119 in. id by 1-3/8 in. od by 0.128 in. dia of material; Hazeltine Elec (mfr and contr) part 1620-1008P1.	For H31
MP10	F	RING, RETAINING: brass, Navy Spec 47B2 condition HH, cadmium plated; 5/8 in. id by 7/8 in. od by 1/8 in. dia of material; Hazeltine Elec (mfr and contr) part 1620-1034P1.	For O26
MP11	C	CHAIN, WELDLESS: stainless steel; 10 links approx 6 in. lg; Hazeltine Elec (mfr and contr) part 382-1005P1.	For H31
MP12	C	COVER, ELECTRICAL CONNECTOR: non-metallic; over-all dim. 2 in. lg by 2-1/4 in. dia; 2-1/4 in.-16 NC-2 external thd for mtg; Hazeltine Elec (mfr and contr) part 1594-1085G1.	Protective cover

TABLE 8-3. MAINTENANCE PARTS LIST — Cont'd.

REF. DESIG.	NOTES	NAME AND DESCRIPTION	LOCATING FUNCTION
MP13	C	COVER, ELECTRICAL CONNECTOR: non-metallic; over-all dim. 1/4 in. lg by 1-15/16 in. dia; 1-15/16 in.-16 NC-2 external thd for mtg; Hazeltine Elec (mfr and contr) part 1594-1085G2.	Protective cover
MP14	C	SHACKLE: steel galvanized; c/o 1 shackle, 1 rd pin, 1 cotter pin; chain type; 5/16 in. dia of shackle stock by 1/2 in. w between eyes by 1 in. inside lg by 3/8 in. dia pin w/hole for cotter pin; Hazeltine Elec (mfr and contr) part 382-1015P1.	Used to attach O27 to O31
MP15	C	FASTENER, CHAIN: fastener for chain link; c/o 1 lever, 1 keeperlink, 1 rivet, 1 body; all parts steel, zinc plated; dim. 5-1/8 in. max lg by 2-5/16 in. max w; American Chain and Cable Inc (mfr) type 675; Hazeltine Elec (contr) part 1592-1160G1.	Used with O27
MP16	C	ADAPTER, CABLE CLAMP TO CONNECTOR: used w/cable connector; aluminum, black anodized finish; rd shape, 1/2 in. lg by 1-7/16 in. od by 1-3/16 in. id; 1-3/16 in.-18 inside thd, 1-7/16 in.-18 outside thd; Hazeltine Elec (mfr and contr) part 1594-1011P2.	For W12
MP17 and MP18		Not used.	
MP19	C	ADAPTER, CABLE TO CONNECTOR: max cable opening dia 11/32 in.; couples to connector by inside thd; 3/4 in.-20 thd; metallic; 1-19/32 in. lg by 29/32 in. dia over-all dim. of clamp, the rubber bushing extends 1/2 in. min from end of clamp; Spec MIL-C-5015; Amphenol (mfr) part 9767-14-6; Hazeltine Elec (contr) part/dwg CP1409.	For P310 and P422
O1 thru O16		Not used.	
O17	C	RING, RETAINING: aluminum, Navy Spec 47A10e, Condition T, 40,000 psi min yield strength; dim. 5/16 in. lg by 5/16 in. w by 1/16 in. deep; octagon shape, 4 alternating sides curved up at right angles to face of ring; center hole 3/16 in. dia; Hazeltine Elec (mfr and contr) part 1620-1033P1.	For H31
O18	C	BUSHING, MACHINE THREAD: brass; cadmium plated; 1-3/8 in. NF-2 male thd, 1-1/2 in. lg; 1 in.-5 Acme female thd, 1/2 in. lg; hex shape wrenching facility, 1-5/8 in. w across flats, 3/16 in. thk by 2-1/4 in. over-all lg; Hazeltine Elec (mfr and contr) part 1620-1038P1.	Bushing for H32
O19 and O20		Not used.	
O21	C	CHAIR, FOLDING: equipment accessory; bonderized steel, USMC green; w/o arms; over-all dim. approx 30-1/2 in. h by 20-1/4 in. deep by 18-1/8 in. w; folded, 36 in. lg by 18-1/8 in. w by 3 in. thk; koroseal stops; ITE Circuit Breaker Co (mfr) part 495036-401; Hazeltine Elec (contr) per manufacturer's part 495036-401.	Equipment accessory
O22	C	VISOR, CATHODE RAY TUBE: plastic; attachment end inside dim. 10-1/4 in. lg by 5-1/16 in. dia, viewing end inside dim. 3 in. lg by 3-5/8 in. dia, 13-1/4 in. lg over-all; Hazeltine Elec (mfr and contr) part/dwg MP-1698.	Viewing hood

TABLE 8-3. MAINTENANCE PARTS LIST — Cont'd.

REF. DESIG.	NOTES	NAME AND DESCRIPTION	LOCATING FUNCTION
O23	C	VISOR, CATHODE RAY TUBE: plastic; attachment end inside dim. 10-1/4 in. lg by 11 in. dia; viewing end inside dim. 3 in. lg by 3-5/8 in. dia by 13-1/4 in. lg over-all; Hazeltine Elec (mfr and contr) part/ dwg MP-1697.	Viewing hood
O24	C	SEWING KIT: for canvas repair; c/o 6 sailmakers needles size 14, 1/500 yard spool olive drab cotton thd no. 12 machine glazed finish type IB3, 4 cord; khaki cloth bag approx 6 in. lg by 5 in. w w/draw string; George Hoyt Co (mfr) type 2108; Hazeltine Elec (contr) part 1594-1037P1.	Canvas repair
O25	C	ROPE, MANILA: installation accessory; manila twisted 3 strands; 5/8 in. dia; treated to retard deterioration due to mildew and rot and treated w/mineral oil lubricating compound; 4400 lb min strength; 7.50 min ft per lb; 25 ft lg ±3 in. w/ends dressed to resist fraying in a manner such as whipping w/twine; Spec 21R7, type M; Hazeltine Elec (mfr and contr) part 268-1006P2.	Installation accessory
O26	C	MOUNTING: Army-Navy mounting MT-960/TPS-1D; base for support and leveling of radio set tower structure; aluminum, painted USMC green w/2 ea passivated stainless steel base plates and adjustable screw posts; approx 34-1/4 in. lg by 6 in. w by 5 in. h over-all; 4 mtg holes in ea base plate 9/16 in. dia on 4 in. dia circle; front end marked "FRONT"; incl countersunk holes 5/8 in. dia on 22 in. mtg centers, ea w/locking pin; 2 mounts used in parallel; positions are interchangeable; BuShips Spec no. CS-1241A, SHIPS-R81, MIL-R-15895(SHIPS); Hazeltine Elec (mfr and contr) part 1620-5004G1.	Tower mounting base
O27	C	GUY: galvanized; 21 ft 11/32 in. ±1 in. lg excluding guy hook; 1/4 in. dia 7 by 7 preformed wire; 25/32 in. dia mtg hole in guy hook; Hazeltine Elec (mfr and contr) part 1592-1168G1.	Equipment support
O28		ANCHOR, GUY: screw blade type; carbon steel dim. 40 in. lg by 4 in. dia; rod incl, thimble eye type upper end, cone pointed type lower end, 0.35 in. to 0.45 in. dia, 2 in. thimble eye; Hubbard & Co (mfr) part 7524-A modified, 40 in. lg; Hazeltine Elec (contr) part 1592-1159P1.	Guy anchor
O29	C	PROTECTOR, RAIN, SHELTER: tent section; olive drab duct canvas no. 12 per Navy Spec 24-C-20; rectangular; 112 in. lg by 76 in. w over-all; mounted by 8 tie ropes ea 18 in. lg; resistant to fire, mildew and water; Hazeltine Elec (mfr and contr) part 1697-1009G1.	For O34
O30	C	LINK CHAIN: clevis repair set; c/o 2 American Chain and Cable part no. 5 Clevis Repair Links and 1 part no. 316R Rivet; low carbon steel, zinc plated; tensile strength 450 lb, wt per foot 6 lbs; ea link 0.644 in. lg by 5/16 in. w by 0.367 in. thk over-all, rivet 0.105 in. dia by 5/16 in. lg head 13/64 in. dia by 5/64 in. thick; American Chain & Cable Co. (mfr) type 5; Hazeltine Elec (contr) part 382-1016G1.	Clevis repair set
O31	C	CHAIN, WELDLESS: 0.281 in. dia stock; steel; 5 ft lg; American Chain and Cable Co (mfr) type 9/32 in. side chain, 5 ft lg; Hazeltine Elec (contr) part 382-1012P1.	For O27
O32	C	TURNBUCKLE ASSEMBLY: used w/guy assembly; steel galvanized finish; c/o 1 turnbuckle, 1 hook, 1 eye type; all parts 1/2 in.-13 NC-2 thd; approx 13-3/16 in. lg by 1/2 in. dia; 6 in. take-up; 3700 lb tensile strength; Wilcox Crittendon & Co (mfr) type 301; Hazeltine Elec (contr) part 1592-1155P1.	For O27

TABLE 8-3. MAINTENANCE PARTS LIST — Cont'd.

REF. DESIG.	NOTES	NAME AND DESCRIPTION	LOCATING FUNCTION
O33	F	STAKE, WOOD: for equipment shelter; wood; 16 in. lg by 1-1/2 in. w by 1-1/16 in. thk over-all; Spec MIL-P-2383, type II, Grade 1, Stock 24-P-49, dwg CJ-915; Hazeltine Elec (mfr and contr) part 1697-1006P1.	To secure O34
O34		SHELTER: Army-Navy Shelter S-68/TPS-1D; canvas personnel and equipment shelter; no. 12 canvas, dark green; c/o 1 tent bag, 1 shelter fly, 1 ground cloth, 1 patch, 360 ft manila rope, in 20 ft lengths, 27 tent stakes, 2 rods 19.5 in. ea, and 2 rods 21 in. ea; obelisk shape, approx 182-3/4 in. h by 120 in. sq base; top of tent mounts to antenna base sides of tent and staked to ground, the pyramid shaped fly covers the tent roof, guy ropes attach to anchoring stakes; when packed, less shield, shelter is 44•in. h by 34 in. w by 22 in. deep, the canvas shelter rises from a 10 ft flooring to its attachment on the Antenna Base, a screened metallic entrance hatch can be installed at tent entrance for ventilation; canvas is fire, water and mildew resistant; Hazeltine Elec (mfr and contr) part 1697-1001G1.	Housing for equipment
O35	C	CLOTH, COTTON, DUCK: olive drab duck canvas no. 4 per Navy Spec 24-C-20; 124 in. lg by 124 in. w over-all; ground cloth for shelter; resistant to fire, mildew and water; Hazeltine Elec (mfr and contr) part 1697-1003G1.	Ground cloth for O34
O36	C	TENT SECTION: for shelter roof; c/o front side, top and rear panels; olive drab duck canvas no. 12 per Navy Spec 24-C-20; pyramid shape; 144 in. lg by 144 in. w by 60 in. h over-all; mounted by 9 manila guy ropes ea 20 ft lg; Hazeltine Elec (mfr and contr) part 1697-1002G1.	Roof for O34
O37	C	CLOTH, COTTON, DUCK: patch for shelter; olive drab duck no. 4 per Navy Spec 24-C-20; 33 in. lg by 33 in. w; fire, mildew and water proof; Hazeltine Elec (mfr and contr) part 1697-1008P1.	Patch for O34
O38	C	BAG TENT: for shelter; olive drab duck canvas no. 4 per Navy Spec 24-C-20; 27 in. dia by 48 in. lg over-all; tie rope fastening; no supporting framework; 2 grip straps; resistant to fire, mildew and water; marked "SHELTER S-68/TPS-1D, NObsr-43457, NObsr-49254, NObsr-52404, NObsr-57464, NObsr-63471 and NObsr-64764"; and w/manufacturers designating letters and serial numbers; Hazeltine Elec (mfr and contr) part 1697-1010G1.	Container for O34
O39	C	CASE: Army-Navy Case CY-1060/TPS-1D; transports miscellaneous and interconnection material for installation of equipment, reserve parts, and tools; steel, USMC green finish; empty; approx 25-1/4 in. lg by 25-1/4 in. w by 31-1/4 in. h over-all; 1 main bottom compartment, and 2 small compartments on inside of top removable cover; 4 flush, folding type handles located 2 on ea side; fastened by 12 wing type screw bolts; water-proof when closed, incl pressure relief valve; BuShips Spec CS-1241A and SHIPS R-81; Hazeltine Elec (mfr and contr) part 1594-5005G1.	Miscellaneous parts case
O40	C	CLIP, RETAINING: stainless steel wire, spring temper; AISI type 302; approx 260,000 psi min tensile strength; 0.051 in. dia; Hazeltine Elec (mfr and contr) part 1620-1041P1.	Retains H31
O41	C	FLANGE, PIN, SWIVEL RETAINING: for holding adjusting post pin; bronze, USMC green; cylindrical, over-all dim. 3/4 in. lg by 2-1/2 in. od by 0.781 in. id; six 0.221 in. mtg holes equally spaced on 2 in. dia circle; Hazeltine Elec (mfr and contr) part 1620-1036P1.	Mounting for H33

TABLE 8-3. MAINTENANCE PARTS LIST — Cont'd.

REF. DESIG.	NOTES	NAME AND DESCRIPTION	LOCATING FUNCTION
O42		Not used.	
O43		FLASHLIGHT: battery operated, two BA30 batteries; 1.5 v, 2-3/8 in. lg by 1-5/16 in. dia; right angle tubular plastic case; colorless plastic lens; blackout filter; slide switch; 1 lamp, 2.5 v, 0.3 amp, G-3-1/2 bulb; miniature screw base; lamp incl; fixed focus; over-all dim. approx 8 in. lg; Army Spec 17-197, type TL-122-D; Hazeltine Elec (mfr and contr) part 318-1022P1.	Equipment accessory
O44	C	VALVE, SAFETY RELIEF: equalizes internal pressure of container to within 2.5 psi of external atmospheric pressure range of 4.2 to 15 psi; aluminum body, painted USMC green; mounts by 3/4 in. -16 NF-2 by 19/32 in. lg thd bushing; body 2-3/4 in. dia by 9/16 in. h; incl seal, plain washer, lockwasher and hex nut for mtg; A. Schraders Son (mfr) part 4594A; Hazeltine Elec (contr) part 381-1012P1.	Air pressure relief valve for O39 and O48
O45	C	BUSHING, RUBBER: type SC-500-B-FF rubber compound per Spec MIL-R-3065; for water-proof cable clamps; 1-1/16 in. id, tapered to 7/8 in. id, 1-23/32 in. flange od, 1-3/16 in. body od; 2-1/16 in. lg over-all; for cable sizes 1-1/16 in. to 1-3/16 in. inclusive; Amphenol (mfr) type 9779-241 issue F; Hazeltine Elec (contr) part 204-1016P9.	For W8
O46		BUSHING, RUBBER: type SC-500-B-FF rubber compound per Spec MIL-R-3065; for water-proof cable clamps; 25/32 in. id tapered to 21/32 in. id, 1-7/32 in. flange od; 29/32 in. body od, 2 in. lg over-all, for cable sizes 25/32 in. to 29/32 in. incl; Amphenol (mfr) type 9779-161; Hazeltine Elec (contr) part 204-1016P13.	For W7, W10, W10A and W12
O47		BUSHING, RUBBER: type SC-500-B-FF rubber compound per Spec MIL-R-3065; for water-proof cable clamps; 31/32 in. id, tapered to 25/32 in. id, 1-15/32 in. flange od, 1-3/32 in. body od, 2 in. lg over-all; for cable sizes 7/8 in. to 1-1/32 in. incl, Amphenol (mfr) type 9779-201 issue F; Hazeltine Elec (contr) part 204-1016P8.	For W1, W11, W15 and W16
O48	C	CASE: Army-Navy Case, accessories CY-1297/TPS-1D; transports miscellaneous and interconnection material for use w/radar equipment; steel, USMC green finish; empty; approx 25-1/4 in. lg by 25-1/4 in. w by 31-1/4 in. h over-all; 1 main bottom compartment; 4 flush, folding type handles located 2 on ea side; fastened by 12 wing type thumb screw bolts, water-proof when closed; incl pressure relief valve; BuShips Spec CS-1241A, SHIPS-R-81, MIL-R-15895(SHIPS); Hazeltine Elec (mfr and contr) part 1594-5005G2.	Miscellaneous parts case
O49	C	GUY: equipment support; c/o 1 ea Hazeltine part 1592-1168G1 Guy Wire Assembly, 382-1015P1 Chain Shackle, 382-1012P1 chain 5 ft lg; 1592-1160G1 chain fastener, 1592-1155P1 turnbuckle approx 27 ft lg excluding turnbuckle and chain fastener; mounts by terminations; Hazeltine Elec (mfr and contr) part 1594-5019G1.	Equipment support
O50	C	ROPE, MANILA: twisted 3 strands; 3/8 in. dia; treated to retard deterioration due to mildew and rot also treated w/blended mineral oil lubricating compound; 1350 lb min breaking strength; 24.4 min ft per lb; Spec MIL-R-16060; Hazeltine Elec (mfr and contr) part 268-1003P1.	Equipment accessory
O51	C	ROD ANCHOR: retaining rod; aluminum, anodized; cylindrical; 1/2 in. dia by 19-1/2 in. lg over-all; 15 deg bevel 3/8 in. lg ea end; Hazeltine Elec (mfr and contr) part 1697-1004P1.	Equipment accessory

TABLE 8-3. MAINTENANCE PARTS LIST — Cont'd.

REF. DESIG.	NOTES	NAME AND DESCRIPTION	LOCATING FUNCTION
O52	C	ROD ANCHOR: secures top of tent to antenna base; aluminum, anodized; cylindrical; 1/2 in. dia by 21 in. lg over-all; 15 deg bevel 3/8 in. lg ea end; Hazeltine Elec (mfr and contr) part 1697-1004P2.	Secures top of tent to antenna base
O53	C	ROD: for leveling tower; steel, cadmium plated; cylindrical shape; over-all dim. 8 in. lg by 5/16 in. dia; Hazeltine Elec (mfr and contr) part 1594-1045P1.	For leveling tower
O54	C	ADAPTER, TEST SET: c/o 1 ea Hazeltine parts 1594-1055P1 and 1594-1005P2 conductors and 1594-1063G1 adapter, unassembled; cloth bag, 12 in. lg by 5 in. w; marked "1594-1066G1" "Contains Adapter Set-Female For Use With TEST SETS TS-235/UR or TS-130/UR"; Hazeltine Elec (mfr and contr) part 1594-1066G1.	For use with test sets
P1 and P2		Not used.	
P3	B	CONNECTOR, PLUG ELECTRICAL: one rd female contact; straight type; 1-7/8 in. lg by 13/16 in. dia over-all dim; 50 ohms nom impedance, constant impedance; cylindrical brass body, 0.440 in. dia cable opening; mounts by 5/8-24 NEF-2 internal thread coupling on one end, threaded gland nut other end; Spec MIL-C-71A; AN type UG-21B/U; Industrial Prod Co (mfr) part 4300; Hazeltine Elec (contr) part 276-1031P1.	Termination for W17
W1	D	CABLE ASSEMBLY, POWER, ELECTRICAL: cable data, MIL Spec MIL-C-915A, type MHFF-19; 19 conductors, stranded, 16 AWG; synthetic resin insulated, felted asbestos or glass fiber yarn treated, binder, impervious sheath of thermoplastic type; 600 v rms working; 9 ft 3 in. lg over-all; 1 plug AN3106C-32-13S ea end 1 cable clamp, AN3057-20 ea end, 1 Amphenol part, cable bushing, 9779-201 ea end, 1 adapter, AN3055-32-20 ea end; AN Cable Assembly, type CX-2002/U (9 ft 3 in.); Hazeltine Elec (mfr and contr) part 1594-5010G1; (incl E18, E27, H16, O47, P151, P406 and W33).	From modulator P151 to power supply P406
W2	D	CABLE ASSEMBLY, RADIO FREQUENCY: coaxial; 48 ohms nom impedance; copper wire, stranded, 16 AWG; low loss plastic dielectric; double braid shielding; synthetic resin jacket; MIL-C-17B, type RG-88B/U; approx 12 ft 5-9/16 in. lg over-all, 12 ft 4 in. lg excluding terminations; 0.475 in. dia over-all cross section of cable; 1 plug, UG-182A/U ea end; Hazeltine Elec (mfr and contr) part 1594-5013G2; (incl P155, P505 and W35).	From modulator P155 to receiver-transmitter
W3	D	CABLE ASSEMBLY, RADIO EMERGENCY: coaxial; 70 ohms nom impedance; copper covered steel wire, 21 AWG; low loss plastic dielectric; double braid shielding; synthetic resin jacket; JAN-C-17A, type RG-6/U; approx 6 ft 21/32 in. lg over-all, 6 ft lg excluding terminations; 0.332 in. dia over-all cross section of cable; 1 plug, UG-18B/U ea end; AN Cable Assembly, type CG-247A/U (6 ft 1 in.); Hazeltine Elec (mfr and contr) part 1594-5012G1; (incl P152, P302 and W31).	From modulator P152 to signal comparator P302
W4	D	CABLE ASSEMBLY, SPECIAL PURPOSE: cable data, total 45 conductors, 3 conductors, stranded, 22 AWG, plastic insulation, 6 conductors, stranded, 20 AWG, rubber insulation, 36 conductors, stranded, 18 AWG, rubber insulation, 6 conductors covered by separate shield, rubber jacket, Boston Insulated Wire & Cable Co, no. 587B modified; dim. data 6 ft 9 in. lg over-all, 6 ft 8 in. lg excluding terminations; 1-15/64 in. dia over-all cross section of cable; 1 Cannon Electric part, connector plug, AK-G52-23CH-1-1/4 ea end; AN Cable Assembly, CX-1999/U (6 ft 9 in.); Hazeltine Elec (mfr and contr) part 1594-5017G1; (incl P407, P601 and W36).	From indicator P601 to power supply P407

TABLE 8-3. MAINTENANCE PARTS LIST — Cont'd.

REF. DESIG.	NOTES	NAME AND DESCRIPTION	LOCATING FUNCTION
W4A	D	CABLE ASSEMBLY, SPECIAL PURPOSE: cable data, total 45 conductors, 3 conductors, stranded, 22 AWG, plastic insulation, 6 conductors, stranded, 20 AWG, rubber insulation, 36 conductors, stranded, 18 AWG, rubber insulation, 6 conductors covered by separate shield, rubber jacket, Boston Insulated Wire & Cable Co., no. 587B modified; dim. data 51 ft 3 in. lg over-all, 51 ft lg excluding terminations; 1-15/64 in. dia over-all cross section of cable; 1 Cannon Electric part, connector plug, AK-G52-23CH-1-1/4 ea end; AN Cable Assembly, CX-1999/U (51 ft 3 in.); Hazeltine Elec (mfr and contr) part 1594-5017G2; (incl P407, P601 and W36).	From indicator P601 to power supply P407
W5	D	CABLE ASSEMBLY, RADIO FREQUENCY: coaxial; 50 ohm nom impedance; silvered copper wire, solid 16 AWG; low loss plastic dielectric; double braid shielding, synthetic resin jacket, MIL-C-17B, type RG-5B/U; approx 5 ft 8-21/32 in. lg over-all, 5 ft 8 in. lg excluding terminations; 0.332 in. dia over-all cross section of cable; 1 plug, UG-18B/U ea end; Hazeltine Elec (mfr and contr) part 1594-5012G2; (incl P306, P507 and W28).	From signal comparator P306 to receiver-transmitter P507
W6	D	CABLE ASSEMBLY, RADIO FREQUENCY: coaxial; 50 ohms nom impedance; silvered copper wire, solid 16 AWG; low loss plastic dielectric; double braid shielding; synthetic resin jacket; JAN-C-17A, type RG-5B/U; 5 ft 8-21/32 in. lg over-all, 5 ft 8 in. lg excluding terminations; 0.332 in. dia over-all cross section of cable; 1 plug, UG-18B/U ea end; Hazeltine Elec (mfr and contr) part 1594-5012G3; (incl P304, P503 and W28).	From signal comparator P304 to receiver-transmitter P503
W7	D	CABLE ASSEMBLY, POWER, ELECTRICAL: cable data, MIL Spec MIL-C-915A, type MHFF-14; 14 conductors, stranded, 16 AWG; synthetic resin insulated, felted asbestos or glass fiber, rayon or glass fiber yarn treated, binder impervious sheath of thermoplastic type; 600 v rms, working; 3 ft 7 in. lg over-all; 1 plug, AN3106C-28-11S ea end, 1 cable clamp, AN3057-16 ea end, 1 Amphenol part, cable bushing, 9779-161 ea end, 1 adapter, AN3055-28-16 ea end; AN Cable Assembly, type CX-2001/U (3 ft 7 in.); Hazeltine Elec (mfr and contr) part 1594-5009G1; (incl E17, E20, H15, O46, P301, P401 and W32).	From signal comparator P301 to power supply P401
W8		CABLE ASSEMBLY, POWER, ELECTRICAL: 24 conductors, stranded 16 AWG wire, ea conductor 26 strands no. 30 AWG copper wire; 600 v working; material in sequence from insulated material out, synthetic resin, felted asbestos or glass fiber wall, treated rayon or glass fiber braid, binder, and impervious thermoplastic sheath; 1.120 in. dia over-all; approx 8 ft 2 in. lg excluding terminations; terminated both ends 1 plug AN3106C-28-125, 1 cable clamp AN3057-24, 1 adapter AN3055-36-24, 1 adapter Hazeltine Elec part 1594-1052P1, 1 bushing Amphenol part 9779-24, used ea end; AN Cable Assembly, type CX-2000/U (7' 9"); Hazeltine Elec (mfr and contr) part 1594-5008G1; (incl E16, E19, H35, O45, P408 and W34).	From power supply P408 to receiver-transmitter P508
W9	D	CABLE ASSEMBLY, RADIO FREQUENCY: coaxial; 70 ohms nom impedance; copper covered steel wire, solid, 21 AWG; low loss plastic dielectric; double braid shielding; synthetic resin jacket; JAN-C-17A, type RG-6/U; approx 5 ft 21/32 in. lg over-all, 5 ft lg excluding terminations; 0.332 in. dia over-all cross section of cable; 1 plug, UG-18B/U ea end; AN Cable Assembly, type CG-247B (5 ft 1 in.); Hazeltine Elec (mfr and contr) part 1594-5012G4; (incl P416, P506 and W31).	From power supply P416 to receiver-transmitter P506

TABLE 8-3. MAINTENANCE PARTS LIST — Cont'd.

REF. DESIG.	NOTES	NAME AND DESCRIPTION	LOCATING FUNCTION
W10	D	CABLE ASSEMBLY, POWER, ELECTRICAL: cable data, MIL Spec MIL-C-915A, type MHFF-14; 14 conductors, stranded, 16 AWG; synthetic resin insulated, felted asbestos or glass fiber, rayon or glass fiber yarn treated, binder; impervious sheath of thermoplastic type; 600 v rms working; 7 ft 2 in. lg over-all; 1 plug, AN3106C-28-9S ea end, 1 cable clamp, AN3057-16 ea end, 1 adapter AN3055-28-16 ea end, 1 Amphenol part, cable bushing 9779-161 ea end; AN Cable Assembly, type CX-1996/U (7 ft 2 in.); Hazeltine Elec (mfr and contr) part 1594-5015G1; (incl E17, E20, H15, O46, P402, P701 and W32).	From power supply P402 to antenna base P701
W10A	D	CABLE ASSEMBLY, POWER, ELECTRICAL: Navy type MHFF-14; 14 conductors no. 16 AWG; stranded copper wire; material in sequence from insulated material out, synthetic resin insulated conductors, asbestos, inner braid of treated rayon or glass fiber binder, impervious sheath; 600 v max working; 150 ft 3 in. lg over-all; c/o 1 plug AN3106C-28-9S, 1 cable clamp AN3057-16 ea end; AN Cable Assembly, type CX-1996/U (150 ft 3 in.); Hazeltine Elec (contr) part 1594-5015G2; (incl E17, E20, H15, O46, P402, P701 and W32).	For remote operations from power supply P402 to antenna base P701
W11	D	CABLE ASSEMBLY, POWER, ELECTRICAL: cable data, MIL Spec MIL-C-915A, type MHFF-19; 19 conductors, stranded, 16 AWG, synthetic resin insulated, felted asbestos or glass fiber, rayon or glass fiber yarn treated, binder, impervious sheath of thermoplastic type; 600 v rms working; 9 ft 7 in. lg over-all; 1 plug, AN3106C-32-8S ea end, 1 cable clamp, AN305-20 ea end, 1 adapter AN3055-32-20 ea end, 1 Amphenol part, cable bushing 9779-201 ea end; AN Cable Assembly, type CX-1998/U (9 ft 7 in.); Hazeltine Elec (mfr and contr) part 1594-5016G1; (incl E28, E29, H16, O47, P403, P751 and W33).	From power supply P403 to antenna base P751
W11A	D	CABLE ASSEMBLY, POWER, ELECTRICAL: Navy type MHFF-19; 19 conductors, stranded 16 AWG wire; material in sequence from insulated material out; synthetic resin, felted asbestos or glass fiber, rayon or glass fiber treated, binder, impervious sheath of thermoplastic type; 600 v rms working; 150 ft 4 in. lg over-all; terminated both ends; one plug AN3106C-32-8S; one cable clamp AN3057-20, one bushing Amphenol bushing part 9779-201, used ea end; AN Cable Assembly, type CX-1998/U (150 ft. 4 in.); Spec MIL-C-915; Hazeltine Elec (mfr and contr) part/dwg 1594-5016G2; (incl E30, E31, H16, O47, P403, P751 and W33; for reference only).	P403 to P751 for remote operation
W12	D	CABLE ASSEMBLY, POWER, ELECTRICAL: cable data, MIL Spec MIL-C-915A, type MHFF-14; 14 conductors, stranded, 16 AWG; synthetic resin insulated, felted asbestos or glass fiber, rayon or glass fiber yarn treated, binder, impervious sheath of thermoplastic type; 600 v rms working; 5 ft 2 in. lg over-all; 1 plug AN3108C-22-14S ea end, 1 cable clamp AN3057-16 ea end, 1 Adapter AN3055-28-16 ea end, 1 Amphenol part, cable bushing, 9779-161 ea end, 1 Hazeltine part, Adapter, 1594-1011P2 ea end; AN Cable Assembly, type CX-2003/U (5 ft 2 in.); Hazeltine Elec (mfr and contr) part 1594-5011G1; (incl E21, E22, E48, H15, MP16, O46, P702, P753 and W32).	From gear box P702 to servo P753
W13	D	CABLE ASSEMBLY, RADIO FREQUENCY: coaxial; 70 ohms nom impedance; copper covered steel wire, solid 21 AWG; low loss plastic dielectric; double braid shielding; synthetic resin jacket; JAN-C-17A, type RG-6/U; approx 4 ft 21/32 in. lg over-all, 4 ft lg excluding terminations; 0.332 in. dia over-all cross section of cable; 1 plug UG-18B/U ea end; AN Cable Assembly, type CG-247B/U (4 ft 1 in.); Hazeltine Elec (mfr and contr) part 1594-5012G5; (incl P305, P413 and W31).	From signal comparator P305 to power supply P413

TABLE 8-3. MAINTENANCE PARTS LIST — Cont'd.

REF. DESIG.	NOTES	NAME AND DESCRIPTION	LOCATING FUNCTION
W14	D	CABLE ASSEMBLY, RADIO FREQUENCY: coaxial; 70 ohms nom impedance; copper covered steel wire, solid 21 AWG; low loss plastic dielectric; double braid shielding; synthetic resin jacket; JAN-C-17A, type RG-6/U; approx 4 ft 21/32 in. lg over-all, 4 ft lg excluding terminations; 0.332 in. dia over-all cross section of cable; 1 plug, UG-18B/U ea end; AN Cable Assembly, type CG-247B/U (4 ft 1 in.); Hazeltine Elec (mfr and contr) part 1594-5012G6; (incl P303, P415 and W31).	From signal comparator P303 to power supply P414
W15	D	CABLE ASSEMBLY, POWER, ELECTRICAL: MIL Spec MIL-C-915A, type DCOP-30; 2 conductors, stranded, 6 AWG; synthetic rubber or resin insulated; polychloroprene, black neoprene sheath; 600 v rms working; 50 ft 1 in. lg over-all; one end, 1 plug AN3106C-24-9S, 1 clamp AN3057-20A, 1 adapter AN3055-32-20, 1 Hazeltine part, adapter 1594-1011P1, 1 Amphenol part cable bushing, 9779-201, other end branched, two 6 in. lg w/terminal lugs; AN Cable Assembly, type CX-1997/U (50 ft 1 in.); Hazeltine Elec (mfr and contr) part 1594-5014G1; (incl E33, E49, E50, H13, MP8, O47, P404 and W30).	System power unit
W16	D	CABLE ASSEMBLY, POWER, ELECTRICAL: cable data, MIL Spec MIL-C-915A, type DCOP-30; 2 conductors, stranded, 6 AWG; synthetic rubber or resin insulated; polychloroprene, black neoprene sheath; 600 v rms working; 50 ft 1 in. lg over-all; one end, 1 plug AN3106C-24-9S, 1 cable clamp AN3057-20A, 1 Adapter AN3055-32-20, 1 Hazeltine part, adapter, 1594-1011P1, 1 Amphenol part, cable bushing, 9779-201, other end branched, two 6 in. lg w/terminal lugs; AN Cable Assembly, type CX-1997/U (50 ft 1 in.); Hazeltine Elec (mfr and contr) part 1594-5014G2; (incl E33, E51, E52, H13, MP8, O47, P406 and W30).	Heater power input
W17	E	CABLE ASSEMBLY, RADIO FREQUENCY: coaxial; 51 ohms nom impedance; 30 mmf/ft; 4000 v rms; inner conductor 7 strands no. 21 AWG silver-coated copper wire, outer conductor double braid no. 34 AWG silver-coated copper wire, 0.355 in. max od; stabilized polyethylene dielectric; 0.280 in. nom od; gray, non-contaminating synthetic resin, heat resistant jacket; 0.420 in. nom od; MIL-C-17B, type RG-9A/U; 1 plug UG-21B/U ea end; Spec JAN-C-17A; (incl P3, P501 and W29; for reference only).	Part of Tuned Cavity TS-172B/UP
W18		Not used.	
W19	D	CABLE ASSEMBLY, POWER, ELECTRICAL: Navy type TCOP-2, 3 no. 22 AWG conductors, stranded copper, ea conductor 16 strands no. 30 AWG wire; material in sequence from insulated material out, synthetic resin or rubber separator, plain colored insulation, inner cotton braid, filler, cotton braid, binder, polychloroprene or impervious sheath; 300 v max working; 4 ft lg over-all; terminated both ends; one plug AN3106A-14S-1, one cable clamp Amphenol part 9767-14-6, used ea end; Spec MIL-C-915; AN Cable Assembly CX-3986/U (4 ft 0 in.); Hazeltine Elec (mfr and contr) part/dwg CA-2290; (incl MP19, P310, P422 and W45).	MTI range-gate control
W20	D	CABLE ASSEMBLY, POWER ELECTRICAL: Navy type DCOP-30; 2 no. 12 AWG conductors; stranded copper, 304 strands no. 30 AWG wire; material in sequence from insulator out, separator, synthetic resin or rubber, braid or tape, fillers, binder, polychloroprene or impervious sheath; 600 v max working; 20 ft 2 in. lg over-all; terminated both ends; one plug AN3106C-24-9S, one adapter AN3055-32-20, one cable clamp AN3057-20A, and one adapter Hazeltine Elec part 1594-1011P1 one end; other end terminated by one plug AN3106C-24-9P, one adapter AN3055-32-20, one cable clamp AN3057-20A and one adapter Hazeltine Elec part 1594-1011P1; Spec MIL-C-915; AN Cable Assembly CX-3987/U (20 ft 2 in.); Hazeltine Elec (mfr and contr) part/dwg CA-2319; (incl E40, E41, H13, MP8, P2401, P2405 and W30).	System power input

TABLE 8-3. MAINTENANCE PARTS LIST — Cont'd.

REF. DESIG.	NOTES	NAME AND DESCRIPTION	LOCATING FUNCTION
W21 thru W27		Not used.	
W28		CABLE, RADIO FREQUENCY: Army-Navy Cable RG-5B/U; coaxial; 50 ohms nom impedance, 28.5 mmf/ft; 3000 v rms; inner conductor no. 16 AWG solid silver coated copper wire; outer conductor double braid, no. 34 AWG silver coated copper wire, 0.264 in. max od; stabilized polyethylene dielectric; 0.181 in. nominal od; black synthetic jacket, 0.332 in. nom od; Hazeltine Elec (contr) part 273-1013P3; (p/o W5, W6 and W509).	Bulk for spares
W29		CABLE, RADIO FREQUENCY: Army-Navy Cable RG-9A/U; coaxial; 51 ohms nom impedance, 30 mmf/ft; 4000 v rms; inner conductor 7 strands no. 21 AWG silver coated copper wire; outer conductor double braid, no. 34 AWG silver coated wire, 0.355 in. max od; stabilized polyethylene dielectric, 0.280 in. nom od; gray, non-contaminating synthetic resin, heat resistant jacket, 0.420 in. nom od; Spec MIL-C-17B; Hazeltine Elec (contr) part 273-1015P2; (p/o W17).	Bulk for spares
W30		CABLE, POWER ELECTRICAL: Navy type DCOP-30; 2 no. 12 AWG conductors; stranded copper, 304 strands no. 30 AWG wire; material in sequence from insulator out, separator, synthetic resin or rubber, braid or tape, fillers, binder, polychloroprene or impervious sheath; 600 v max working; Spec MIL-C-915; Hazeltine Elec (contr) part 273-1028P7; (p/o W15, W16 and W20).	Bulk for spares
W31		CABLE, RADIO FREQUENCY: Army-Navy Cable RG-6/U; coaxial; 76 ohms impedance, 20 mmf/ft; 2700 v rms; inner conductor no. 21 AWG plain copper weld wire; outer conductor double braid, inner braid no. 34 AWG silver coated copper wire, out braid no. 34 AWG plain copper wire, 0.264 in. max od; stabilized polyethylene dielectric; 0.185 in. nom od; gray, non-contaminating synthetic resin heat resistant jacket, 0.332 in. nom od; Spec JAN-C-17A; Hazeltine Elec (contr) part 273-1044P1; (p/o W3, W9, W13 and W14).	Bulk for spares
W32		CABLE, POWER ELECTRICAL: Navy type MHFF-14; 14 conductor no. 16 AWG stranded copper wire; material in sequence from insulated material out, synthetic resin insulated conductors, asbestos, inner braid of treated rayon or glass fiber binder, impervious sheath; 600 v rms max, working; Spec MIL-C-915; Hazeltine Elec (contr) part 273-1073P5; (p/o W7, W10, W10A and W12).	Bulk for spares
W33		CABLE, POWER ELECTRICAL: 19 conductors, stranded 16 AWG wire; material in sequence from insulated material out, synthetic resin, felted asbestos or glass fiber, rayon or glass fiber treated, binder, impervious sheath of thermoplastic type; 600 v rms working; Spec MIL-C-915; MIL type MHFF-19; Hazeltine Elec (contr) part 273-1073P6; (p/o W1, W11 and W11A).	Bulk for spares
W34		CABLE, POWER ELECTRICAL: Navy type MHFF-24; 24 conductors no. 16 AWG stranded copper wire; 600 v rms max working voltage; material in sequence from insulated material out, synthetic resin insulated conductors, asbestos inner braid or rayon or glass fiber, binder, and impervious thermoplastic sheath; 1.120 in. max dia over-all; resistant to heat and flame; Spec MIL-C-915(SHIPS); Hazeltine Elec (contr) part 273-1073P7; (p/o W8).	Bulk for spares

TABLE 8-3. MAINTENANCE PARTS LIST — Cont'd.

REF. DESIG.	NOTES	NAME AND DESCRIPTION	LOCATING FUNCTION
W35		CABLE, RADIO FREQUENCY: Army-Navy Cable RG-88B/U; coaxial, 50 ohms nom impedance, 50 mmf/ft; 8000 v peak max, operating voltage; inner conductor no. 14 AWG, 19 strands tinned copper wire; outer conductor 4 braids, ea no. 34 AWG tinned copper wire, 0.440 in. max dia; composite synthetic rubber dielectric c/o 1 layer of conducting compound 0.090 in. dia, 1 layer of insulated compound 0.248 in. dia, and 1 layer of red insulated compound 0.288 in. dia; black low temp non-contaminating synthetic resin jacket, 0.490 in. max od; Spec MIL-C-17B; Hazeltine Elec (contr) part 273-1110P3; (p/o W2).	Bulk for spares
W36		CABLE, SPECIAL PURPOSE, ELECTRICAL: 3 coaxial conductors; ea inner conductor no. 22 AWG stranded tinned copper wire; ea outer conductor tinned copper shield, 6 conductors no. 20 AWG and 36 conductors no. 18 AWG stranded, tinned copper wire; ea coaxial conductor nylon braid insulated, 6 conductors ea neoprene insulated w/rubber tape barrier, tinned copper shield and nylon braid insulated, 36 conductors neoprene insulated, all color coded; 500 v working no. 20 and no. 16 conductors are formed into 6 groups, ea group nylon braid insulated, fiber glass filler, nylon binder braid and 1/8 in. thk neoprene jacket over-all; rd, 1-7/32 in. dia over-all; coaxial conductor rated 75 ohms characteristic impedance; Boston Insulated Wire & Cable (mfr) part 587B (modified); Hazeltine Elec (contr) part 1594-1001P1; (p/o W4 and W4A).	Interconnecting cable
W37		CABLE ASSEMBLY, RADIO FREQUENCY: Army-Navy Cable RG-19/U; 7 ft 9 in. lg over-all; both ends identically processed for special terminations w/jacket and shield cut back 1-1/2 in. dielectric cut back 0.500 in. and re-worked to depth of 2.219 in., axial hole no. 8-32 NC-2 thd by 1/2 in. deep tapped in center conductor; Hazeltine Elec (mfr and contr) part 1594-1059P1.	Cable for RF854
W38 thru W44		Not used.	
W45		CABLE, POWER, ELECTRICAL: 3 conductors, no. 16 AWG, copper 26 strands, no. 30 AWG; synthetic resin or synthetic rubber; materials in sequence from insulated conductor out, synthetic resin or synthetic rubber, rubber; 2000 v dielectric test; rd cross section; 0.450 in. dia over-all; Spec MIL-C-915, type TCOP-3; Hazeltine Elec (mfr and contr) part 273-1067P2; (p/o W19).	Bulk for spares

TABLE 8-3. MAINTENANCE PARTS LIST — Cont'd.

REF. DESIG.	NOTES	NAME AND DESCRIPTION	LOCATING FUNCTION
101-199 Series	E	MODULATOR, RADAR: Army-Navy Modulator, Radar MD-144A/TPS-1D; Hazeltine Elec (mfr and contr) part/dwg A-18924; Navy Spec MIL-R-0015895D(SHIPS) and Amendment 2.	
A101	F	BRACKET, ANGLE: 1/4 hard aluminum, alodine finish; irregular "L" shape; 4-1/8 in. lg by 2-1/2 in. w by 1-11/16 in. h over-all; Hazeltine Elec (mfr and contr) part 1587-1087G1.	Mounting for I153 and XI153
A102		MOUNT, RESILIENT: square mtg; 50-144 lb load rating; 3 in. lg by 3 in. w by 1/2 in. h over-all; synthetic rubber cushion, compression cup type; 2-7/8 in. dia by 3/4 in. thk; steel center sleeve w/3/8 in.-16 center hole; 4 mtg holes 0.266 in. dia on 2-1/2 in. by 2-1/2 in. mtg centers; Barry Corp (mfr) type 7235-F; Hazeltine Elec (contr) part 344-1009P6.	Inner case shock mounts
A103	F	BRACKET, ANGLE: half hard yellow brass, cadmium plated; "L" shape; 4-11/32 in. lg by 1 in. w by 1-1/8 in. h over-all; Hazeltine Elec (mfr and contr) part/dwg 1587-1020P1.	Mounting for R151
A104	F	BRACKET, ANGLE: cold rolled steel, cadmium plated; "L" shape; 1-5/16 in. lg by 9/16 in. w by 0.606 in. h over-all; Hazeltine Elec (mfr and contr) part/dwg 217-1022P1.	Mounting for R152
A105		Not used.	
A106	A	PLATE, MOUNTING ELECTRON TUBE SOCKET: nylon base thermo setting plastic; natural color; rectangular shape; 10-3/16 in. lg by 3-3/4 in. w by 1/16 in. thk over-all; Hazeltine Elec (mfr and contr) part 1587-1030P1.	For XV153, XV154 and XV155
A107	A	PLATE, MOUNTING, ELECTRON TUBE SOCKET: nylon base thermo setting plastic; natural color; rectangular shape; 7-1/4 in. lg by 3-3/4 in. w by 1/4 in. thk; incl eight 0.221 in. dia, one 21/32 in. dia and one 27/32 in. dia holes; Hazeltine Elec (mfr and contr) part 1587-1029P1.	Mounts XV151 and XV152
A108	F	RETAINER, CAPACITOR: "U" shape; aluminum alloy 52S-H32, QQ-A-318b, condition 1/4 hard; gray enamel finish; approx 10-1/4 in. lg by 6-1/2 in. w by 9-7/8 in. h over-all; eight 1/4 in. dia mtg holes, four on ea side, spaced 3 in. c to c; Hazeltine Elec (mfr and contr) part A-19071.	Mounting for Z161
A109	F	RETAINER, CAPACITOR: 1/4 hard aluminum, alodine finish; "U" shape; 5-1/16 in. lg by 4-11/16 in. w by 7-5/16 in. h over-all; Hazeltine Elec (mfr and contr) part 1587-1055G1.	Mounting for C153
A110	F	RETAINER, CAPACITOR: 1/4 hard aluminum, alodine finish; cross shape; 3-15/16 in. lg by 2-7/8 in. w by 15/16 in. h over-all; two 0.169 in. dia mtg holes spaced 2-1/2 in. c to c; Hazeltine Elec (mfr and contr) part 1587-1028G1.	For C158
A111	F	BRACKET, MOUNTING, REACTOR: half hard yellow brass, cadmium plated; irregular "Z" shape, 2 in. lg by 1 in. w by 1-3/4 in. h over-all; Hazeltine Elec (mfr and contr) part 1587-1066P1.	Mounting for L152
A112	F	BRACKET, MOUNTING, SWITCH: aluminum N spec 47A11, condition 1/4 hard; "U" shaped; 1-9/16 in. lg by 3/8 in. w by 5/16 in. h over-all; two 0.169 in. dia mtg holes spaced 1-3/16 in. c to c; 1 hole 5/32 in. dia located in center; Hazeltine Elec (mfr and contr) part 1592-1079P1.	Bracket for S152 and S155

TABLE 8-3. MAINTENANCE PARTS LIST — Cont'd.

REF. DESIG.	NOTES	NAME AND DESCRIPTION	LOCATING FUNCTION
A113	F	BRACKET, ANGLE: 1/4 hard aluminum, alodine finish; irregular "L" shape; 2.896 in. lg by 2-1/2 in. w by 0.458 in. h over-all; Hazeltine Elec (mfr and contr) part 1587-1086G1.	Mounting for I151 and XI151 •
A114	F	BRACKET, ANGLE: half hard yellow brass, cadmium plated; rectangular shape; 2-9/16 in. lg by 1 in. w by 0.014 in. thk over-all; Hazeltine Elec (mfr and contr) part/dwg 1587-1020P2.	Mounting for O103 and O115
A115		Not used.	
A116	E	COVER, ELECTRICAL EQUIPMENT CABINET: aluminum, anodized, USMC green; rectangular shape; approx 28-1/2 in. lg by 24 in. w by 1-1/4 in. deep over-all; 26 mtg holes tapped 1/4 in.-20, 2 mtg holes 0.386 in. dia symmetrically spaced around edges; Hazeltine Elec (mfr and contr) part 1620-1011G1.	Cover for outer case
A117		Not used.	
A118	E	CABINET, ELECTRICAL EQUIPMENT: aluminum; 24-1/4 in. lg by 24 in. w by 32 in. h over-all; incl several channels and lg tubes of aluminum soldered to sides; incl four flush folding type handles located 2 ea side and pressure relief valve; Hazeltine Elec (mfr and contr) part A-18869G3.	Unit outer case
A119	E	COVER, FILTER, AIR CONDITIONING: aluminum, painted USMC green; sq shape; 11-1/2 in. lg by 11-1/2 in. w by 1-9/16 in. deep; eight mtg inserts w/countersunk no. 10-24 NC-2 holes equally spaced around edges; Hazeltine Elec (mfr and contr) part 1587-1048G1.	Filter cover
A120	C	BRACKET, VARIAC: aluminum; alodine finish; irregular shape; 6-5/16 in. lg by 6-1/8 in. h; mounted by 3 threaded inserts, two on 3-1/4 in. centers 1/4 in. from edge, one hole 1 in. from edge, centrally located between outer inserts; Hazeltine Elec (mfr and contr) part/dwg A-18822.	Mounts variac
A121	F	BRACKET, ANGLE: 1/4 hard aluminum, alodine finish; rectangular shape; 5-21/32 in. lg by 3-3/16 in. w by 2 in. h over-all; Hazeltine Elec (mfr and contr) part/dwg 1587-1021G1.	Mounts C158
A122	C	SUPPORT, ARM, LATCH: cold rolled steel, cadmium plated; irregular shape; 5-1/16 in. lg by 1-5/8 in. w by 3/4 in. h over-all; Hazeltine Elec (mfr and contr) part 1587-1083P1.	Part of chassis latch assembly
A123	C	BRACKET, HANDLE: cold rolled steel, cadmium plated; channel shape; 4-11/32 in. lg by 1-1/32 in. w by 11/16 in. h over-all; Hazeltine Elec (mfr and contr) part 1587-1084P1.	Mounts A122
A124	C	BRACKET, STOP, SWITCH: cold rolled steel, cadmium plated; irregular "L" shape; 5-7/16 in. lg by 2 in. w by 1-11/16 in. h over-all; Hazeltine Elec (mfr and contr) part 1587-1090G1.	Stop for S153
A125	F	BRACKET, ANGLE: cold rolled steel, cadmium plated; "L" shape; 4-11/16 in. lg by 1-13/16 in. w by 4-3/4 in. h over-all; marked "S151" and "S153"; Hazeltine Elec (mfr and contr) part 1587-1091P1.	Mounts S153
B101 thru B150		Not used.	

TABLE 8-3. MAINTENANCE PARTS LIST — Cont'd.

REF. DESIG.	NOTES	NAME AND DESCRIPTION	LOCATING FUNCTION
B151		FAN, CENTRIFUGAL: single unit operating on a common shaft; prime mover supplied w/unit; electric motor, 1/15 hp, 105 v to 125 v ac, 400 cycles; single phase; 7400 to 7500 rpm; Joy Mfg Co (mfr) model AVE47-32D732; Hazeltine Elec (contr) part 315-1026P1.	Cooling motor
C101		CAPACITOR, FIXED, PAPER DIELECTRIC: 600 v dc working, 100,000 to 100,000 μμf, +20 -10%, 120,000 μμf to 90,000 μμf capacitor range; metal case; uninsulated; hermetically sealed; case 1 in. deep by 3/4 in. h by 1-13/16 in. w; Spec MIL-C-25A, MIL type CP53B4EF104V; Hazeltine Elec (contr) part 235-1002P9.	Decoupling capacitor for V101
C101A	E	Part of C101; for reference only.	Decoupling capacitor for V101
C101B	E	Part of C101; for reference only.	Decoupling capacitor for V101
C102	B	CAPACITOR, FIXED, MICA DIELECTRIC: 500 v dc working, 2700 μμf, ±10%; plastic case, case 51/64 in. w by 51/64 in. h by 1/4 in. deep; Spec MIL-C-5A, MIL type CM30B272K; Hazeltine Elec (contr) part CM30B272K.	Coupling capacitor for V101
C103		Same as C102.	Coupling capacitor for V101
C104	B	CAPACITOR, FIXED, MICA DIELECTRIC: 500 v dc working; 270 μμf, ±10%; plastic case, case 47/64 in. w by 7/16 in. h by 3/16 in. deep; Spec MIL-C-5A, MIL type CM20B271K; Hazeltine Elec (contr) part 235-1005P65.	Coupling capacitor for V101
C105		CAPACITOR, FIXED, PAPER DIELECTRIC: 600 v dc working; 50,000 to 50,000 μμf, +20 -10%, 45,000 μμf to 60,000 μμf capacity range; metal case; uninsulated; hermetically sealed; case 1 in. deep by 3/4 in. h by 1-13/16 in. w; Spec MIL-C-25A, MIL type CP53B4EF503V; Hazeltine Elec (contr) part 235-1002P3.	Consists of C105A and C105B
C105A	E	Part of C105; for reference only.	Cathode bypass for V102
C105B	E	Part of C105; for reference only.	Cathode bypass for V102
C106		Not used.	
C107		CAPACITOR, FIXED, PAPER DIELECTRIC: 600 v dc working; 100,000 μμf, ±10%, 90,000 μμf to 110,000 μμf capacity range; uninsulated; hermetically sealed; metal case 1 in. deep by 3/4 in. h by 1-13/16 in. w; Spec MIL-C-25A; MIL type CP53B1EF104K; Hazeltine Elec (contr) part 235-1002P7.	Cathode RF bypass for V103
C108		Not used.	
C109	B	CAPACITOR, FIXED, PAPER DIELECTRIC: 600 v dc working; 50,000 μμf, ±20%, 40,000 μμf to 60,000 μμf capacity range; metal case; insulated; hermetically sealed; case 1/2 in. dia by 1-5/16 in. lg; Spec MIL-C-25A, MIL type CP26A1EF503M; Hazeltine Elec (contr) part 235-1123P3.	Cathode coupling for V105A

TABLE 8-3. MAINTENANCE PARTS LIST — Cont'd.

REF. DESIG.	NOTES	NAME AND DESCRIPTION	LOCATING FUNCTION
C110	B	CAPACITOR, FIXED, PAPER DIELECTRIC: 600 v dc working; 10,000 μμf, ±20%, 8000 μμf to 12,000 μμf capacity range; metal case; insulated; hermetically sealed, case 1/2 in. dia by 1-5/16 in. lg; Spec MIL-C-25A, MIL type CP26A1EF103M; Hazeltine Elec (contr) part 235-1123P1.	DC blocking for V106A cathode
C111	B	CAPACITOR, FIXED, MICA DIELECTRIC: 500 v dc working; 470 μμf, ±10%; case 47/64 in. w by 7/16 in. h by 3/16 in. deep; Spec MIL-C-5A; MIL type CM20B471K; Hazeltine Elec (contr) part 235-1005P80.	Grid leak for V105B
C112		Same as C110.	Cathode bypass for V105B
C113 thru C152		Not used.	
C153		CAPACITOR, FIXED, PAPER DIELECTRIC: 6000 v dc working; 1.0 μf, +20 -10%, 1.2 μf to 900,000 μμf capacity range; metal case; uninsulated; hermetically sealed; case 3-3/4 in. deep by 7-1/2 in. h by 4-9/16 in. w, 2 in. terminal centers, terminals 2-3/4 in. h; Spec MIL-C-25A; MIL type CP70D1FP105V; Hazeltine Elec (contr) part 235-1064P1.	High voltage filter for V152
C154 and C155		Not used.	
C156	B	CAPACITOR, FIXED, PAPER DIELECTRIC: 600 v dc working; 2.0 μf, +20 -10%, 2.40 μf to 1.80 μf capacity range; metal case; uninsulated; hermetically sealed; 2 in. deep by 1-1/8 in. h by 2 in. w; Spec MIL-C-25A, MIL type CP53B1EF205V; Hazeltine Elec (contr) part 235-1002P29.	Filtering capacitor for K151
C157		Same as C156.	Filtering capacitor for K151
C158		CAPACITOR, FIXED, PAPER DIELECTRIC: 300 v ac working; 400 cycles; 1.5 μf, +10 -5%, 1.65 μf to 1.425 μf capacity range; metal case; uninsulated; hermetically sealed; case 1-1/16 in. deep by 3-7/8 in. h by 1-13/16 in. w; Sprague Elec (mfr) part P-15679; Hazeltine Elec (contr) part 235-1067P1.	Phase shift for B151
C159		CAPACITOR, FIXED, CERAMIC DIELECTRIC: 500 v dc working; 1000 μμf, ±20%; variable temperature coefficient; insulated; body 5/8 in. lg by 5/16 in. w across flats, height of terminals from case 3/16 in.; mounting device 11/32 in. lg, no. 12-28 mounting device thread; Erie Resistor (mfr) type 357; Hazeltine Elec (contr) part 235-1261P1.	AC line filter
C160		Same as C159.	AC line filter
C161		Same as C159	AC line filter
C162		Same as C159.	AC line filter
C163		Same as C159.	AC line filter
C164		Same as C159.	AC line filter

TABLE 8-3. MAINTENANCE PARTS LIST — Cont'd.

REF. DESIG.	NOTES	NAME AND DESCRIPTION	LOCATING FUNCTION
C165		Same as C159.	AC line filter
C166		Same as C159.	AC line filter
C167		Same as C159.	DC line filter
C168		Same as C159.	DC line filter
C169		Same as C159.	DC line filter
C170		Same as C159.	AC line filter
C171		Same as C159.	AC line filter
E101	B	TERMINAL BOARD: phenolic board; incl 8 double screw type terminals; barrier type; 4-1/4 in. lg by 1-1/8 in. w by 1/2 in. h, excluding terminals; Hazeltine Elec (mfr and contr) part 247-1015G71.	General purpose
E102		Same as E101.	General purpose
E103		CONTACT, ELECTRICAL: 2 fine silver points, 11/32 in. dia by 3/16 in. h; approx 1-5/8 in. lg by 1 in. w by 1 in. h over-all; 30 amp, 110 v ac; Hazeltine Elec (mfr and contr) part 1587-1019G1.	For shorting switch S151
E104	B	INSULATOR, STANDOFF: steatite, grade L-3 or better, white; no voltage rating; 2-1/2 in. lg by 1 in. sq; 2 no. 8-32 by 3/8 in. deep tapped holes each end; Spec JAN-I-8, JAN type NS3W1420; Hazeltine Elec (contr) part 222-1002P5.	Insulated mounting for L152, R151, R156 and R157
E105		INSULATOR, STANDOFF: steatite, grade L-3 or better; white; no voltage rating; 1 in. lg by 1/2 in. dia; 1 no. 8-32 by 3/8 in. deep tapped hole ea end; Spec JAN-I-8, JAN type NS3W0208; Hazeltine Elec (contr) part 222-1001P10.	Cable clamp mounting
E106	B	INSULATOR, STANDOFF: steatite, grade L-3 or better; white; no voltage rating; 2-1/2 in. lg by 3/4 in. dia; 1 no. 10-32 by 3/8 in. deep tapped hole ea end; Spec JAN-I-8, JAN type NS3W0320; Hazeltine Elec (contr) part 222-1001P20.	High voltage insulator
E107	B	INSULATOR, STANDOFF: steatite, grade L-3 or better; white; no voltage rating; 2 in. lg by 3/4 in. dia; 1 no. 10-32 by 3/8 in. deep tapped hole ea end; Spec JAN-I-8, JAN type NS3W0316; Hazeltine Elec (contr) part 222-1001P19.	Insulated mounting for A106
E108	A	INSULATOR, PLATE: plastic; no voltage rating; 1-1/2 in. lg by 1 in. w by 1/32 in. thk; 1 mtg hole 7/16 in. dia located 1/2 in. from one end on center line; Hazeltine Elec (mfr and contr) part 221-1002P2.	Insulated mounting for R110, R167 and R168
E109	B	INSULATOR, STANDOFF: steatite, grade L-3 or better, white; no voltage rating; 1-1/2 in. lg by 1/2 in. dia; 1 no. 8-32 by 3/8 in. deep tapped hole ea end; Spec JAN-I-8, JAN type NS3W0212; Hazeltine Elec (contr) part 222-1001P12.	Cable clamp mounting
E110		KNOB: set screw type; 1.027 in. lg by 0.911 in. max od; black tenite, matte finish; white arrow marking; N dwg RE10F651A, Fed Spec QQ-A-351; Raytheon (mfr) catalog 90-2-2G; Hazeltine Elec (contr) part 231-1057G17.	For R167

TABLE 8-3. MAINTENANCE PARTS LIST — Cont'd.

REF. DESIG.	NOTES	NAME AND DESCRIPTION	LOCATING FUNCTION
E111	F	TERMINAL STRIP, GROUNDING: angle type; half hard yellow brass; cadmium plated; c/o ground lug and bus bar soldered together; 5-1/16 in. lg by 1-3/8 in. w by 3/4 in. h over-all; Hazeltine Elec (mfr and contr) part 1587-1069G1.	To ground chassis
E112	B	INSULATOR, STANDOFF: steatite, grade L-3 or better, white; no voltage rating; 2 in. lg by 1 in. sq; 2 no. 8-32 by 3/8 in. deep tapped holes ea end; Spec JAN-I-8, JAN type NS3W1416; Hazeltine Elec (contr) part 222-1002P4.	Spacer for mounting R169
E113		INSULATOR, PLATE: glass bonded mica, JAN-I-10, grade L-4; 10 rms volts per mil average voltage rating; 1-1/2 in. lg by 7/8 in. w by 1/8 in. thk; Hazeltine Elec (mfr and contr) part 1587-1035P1.	Cable clamp mounting
E114	A	INSULATOR, PLATE: plastic; no voltage rating; 1-13/16 in. lg by 7/8 in. w by 1/32 in. thk; Hazeltine Elec (mfr and contr) part 221-1007P3.	For E151
E115	C	TERMINAL BOARD: nylon base phenolic board; incl 6 stud terminals; 2-5/8 in. lg by 7/8 in. w by 1/8 in. thk, excluding terminals; Hazeltine Elec (mfr and contr) part 1587-1038G1.	Component connection
E116	A	INSULATOR, PLATE: nylon base phenolic; natural color; 4-1/4 in. lg by 1-3/8 in. w by 1/32 in. thk; four 11/64 in. dia mtg holes on 7/16 in. by 3-15/16 in. mtg centers; eight 1/4 in. dia holes spaced 7/16 in. apart; Hazeltine Elec (mfr and contr) part 221-1008P29.	Backing plate for E101 and E102
E117	A	INSULATOR, PLATE: nylon base phenolic, natural color; 2-15/16 in. lg by 1-3/8 in. w by 1/32 in. thk; four 11/64 in. dia mtg holes on 7/16 in. by 2-5/8 in. mtg centers; five 1/4 in. dia holes spaced 7/16 in. apart; Hazeltine Elec (mfr and contr) part 221-1008P26.	Backing plate for E152
E118	C	SHIELD, ELECTRON TUBE: accommodates 2 RTMA tube envelopes; vertical joint; straight cylinder shape w/bracket; aluminum alloy; 6-5/16 in. lg by 3-11/16 in. dia over-all; Hazeltine Elec (mfr and contr) part A-18823.	For V156
E119	B	TERMINAL BOARD: mica filled moulded phenolic board; incl 2 screw type terminals; barrier type; 1-5/8 in. lg by 1-1/8 in. w by 1/2 in. h, excluding terminals; H.B. Jones (mfr) part 141-Y-D; Hazeltine Elec (contr) part TS-1541-2.	IFF pre-trigger terminal strip
E120	B	INSULATOR, STANDOFF: steatite, grade L-3 or better; white; no voltage rating; 5/8 in. lg by 1/2 in. dia; 1 no. 8-32 by 3/16 in. deep tapped hole ea end; Spec JAN-I-8, JAN type NS3W0205; Hazeltine Elec (contr) part 222-1001P8.	Cable clamp mounting
E121 and E122		Not used.	
E123	C	TERMINAL STRIP, GROUNDING: beryllium copper alloy; 0.005 in. thk; bright alloy plated; rectangular shape, 9-31/32 in. lg by 1 in. w by 1/8 in. h over-all; same as Hazeltine Elec part 1587-1132P1 except opposite hand; Hazeltine Elec (mfr and contr) part 1587-1132P2.	Chassis ground strip
E124	C	TERMINAL STRIP, GROUNDING: beryllium copper alloy 0.005 in. thk; bright alloy plated; rectangular shape, 9-31/32 in. lg by 1 in. w by 1/8 in. h over-all; same as Hazeltine Elec part 1587-1132P2 except opposite hand; Hazeltine Elec (mfr and contr) part 1587-1132P1.	Chassis ground strip

TABLE 8-3. MAINTENANCE PARTS LIST — Cont'd.

REF. DESIG.	NOTES	NAME AND DESCRIPTION	LOCATING FUNCTION
E125	C	TERMINAL STRIP, GROUNDING: stainless steel, passivate finish; rectangular shape, 20 in. lg by 1 in. w by 0.005 in. thk, bent up full lg to 3/16 in. h; Hazeltine Elec (mfr and contr) part 1587-1119P1.	Chassis ground strip
E126	C	PIN, STRAIGHT, HEADED: stainless steel, passivate finish; head 3/8 in. dia by 1/32 in. lg; shank 0.188 in. dia by 0.145 in. lg and 0.125 in. dia by 0.144 in. lg; 0.320 in. lg over-all; hole 0.062 in. dia by 3/32 in. deep in end; Hazeltine Elec (mfr and contr) part 1593-1003P1.	Mounting stud for A116
E127	C	TERMINAL STRIP, GROUNDING: beryllium copper alloy 0.005 in. thk; bright alloy plated; rectangular shape, 11-9/32 in. lg by 1-5/16 in. w by 1/8 in. h over-all; same as Hazeltine Elec part 1587-1131P2 except opposite hand; Hazeltine Elec (mfr and contr) part 1587-1131P1.	Chassis ground strip
E128	C	TERMINAL STRIP, GROUNDING: beryllium copper alloy 0.005 in. thk; bright alloy plated; rectangular shape, 11-9/32 in. lg by 1-5/16 in. w by 1/8 in. h over-all; same as Hazeltine Elec part 1587-1131P1 except opposite hand; Hazeltine Elec (mfr and contr) part 1587-1131P2.	Chassis ground strip
E129		TERMINAL, STUD: 27/32 in. lg by 1/4 in. w over-all; hexagonal cross-sectional shape, 1/4 in. across hex flats; Hazeltine Elec (mfr and contr) part 227-1050P4.	Component connection
E130 thru E150		Not used.	
E151		TERMINAL, BOARD: phenolic; 3 double screw type terminals incl; 1-3/4 in. lg by 7/8 in. w by 13/32 in. h excluding terminals; four 0.160 in. dia mtg holes on 1-1/2 in. by 5/16 in. mtg centers; Hazeltine Elec (mfr and contr) part 247-1014G45.	General purpose
E152		TERMINAL BOARD: phenolic board; incl 5 double screw type terminals; barrier type; 2-15/16 in. lg by 1-1/8 in. w by 1/2 in. h, excluding terminals; Hazeltine Elec (mfr and contr) part 247-1015G68.	General purpose
E153	C	INSULATOR, SPACER: nylon, Polymer Corp type FM1001; natural color; 1-1/4 in. lg by 1/2 in. dia over-all, one no. 8-32 by 1/2 in. deep tapped hole ea end; Hazeltine Elec (mfr and contr) part 1587-1129P1.	Spacer for cable guide
E154		SHIELD, ELECTRON TUBE: accommodates RTMA tube envelope style T-5-1/2; vertical joint, straight cylinder shape w/flared end, open top; brass or copper; 1-3/8 in. lg by 0.930 in. dia over-all; mounts on shock shield base; Spec JAN-S-28A, JAN type TS102U01; Hazeltine Elec (contr) part 308-1001P1.	For V106
E155		SHIELD, ELECTRON TUBE: accommodates RTMA tube envelope style T-6-1/2, vertical joint, straight cylinder shape w/flared end, open top; brass or copper; 1-15/16 in. lg by 1.065 in. dia over-all; mounts on shock shield base; Spec JAN-S-28A, JAN type TS103U02; Hazeltine Elec (contr) part 308-1002P2.	For V105
H101 and H102		Not used.	

TABLE 8-3. MAINTENANCE PARTS LIST — Cont'd.

REF. DESIG.	NOTES	NAME AND DESCRIPTION	LOCATING FUNCTION
H103		SCREW, EXTERNALLY RELIEVED BODY: stainless steel; passivate finish; flat head; slot drive; head dim., 3/16 in. h by 1/2 in. dia; externally relieved body, 0.185 in. first dia from head, 0.845 in. largest bearing surface of head to end of first shoulder or undercut, 1-3/8 in. lg; 1/4-20 NC-2 thd by 1/2 in. lg; Hazeltine Elec (mfr and contr) part 209-1008P1.	For A116
H104		CLAMP, LOOP: nylon; 0.173 in. dia hole for screw; 0.375 in. w by 0.045 in. material thk over-all dim.; designed to hold material 0.44 in. dia w/clamp flanges closed to 0.125 in. apart; Burndy Engineering Co (mfr) type HP-7N; Hazeltine Elec (contr) part CP-1295-7.	Cable clamp
H105		SCREW, EXTERNALLY RELIEVED BODY: stainless steel; passivate finish; binding head; 0.114 in. h by 0.399 in. w; externally relieved body, 0.135 in. first dia from head, 5/8 in. largest bearing surface of head to end of first shoulder or undercut, 15/16 in. lg; no. 10-24 NC-2 by 5/16 in. lg threaded portion; Hazeltine Elec (mfr and contr) part 1587-1016P1.	Attaches B151 filter
H106		WASHER, SHOULDERED: brass; 0.022 in. thk by 0.437 in. od by 0.173 in. id over-all; 0.258 in. od by 0.156 in. h; Ward Leonard Elec Co (mfr) type 902; Hazeltine Elec (contr) part 236-1081P1.	Part of mounting for R152
H107		CLAMP, LOOP: nylon; 3/4 in. lg by 3/8 in. h over-all; designed to hold material 0.250 in. max dia; Burndy Engineering Co (mfr) type HP-4N; Hazeltine Elec (contr) part CP-1295-4.	Cable clamp
H108		SCREW, EXTERNALLY RELIEVED BODY: stainless steel; passivate finish; hex head; slot drive, 0.194 in. max h, 7/16 in. w across flats; dim., externally relieved body, 1/4 in. first dia from head, 3/16 in. second dia from head, 0.032 in. largest bearing surface of head to end of first shoulder or undercut, 17/32 in. largest bearing surface of head to end of second shoulder or undercut, 7/8 in. lg over-all; 0.250 (1/4) in. nom od, 1/4-20 thd by 5/16 in. lg; Hazeltine Elec (mfr and contr) part 209-1015P1.	Attaches trigger chassis assembly
H109		RETAINER, ELECTRON TUBE: stainless steel; passivate finish; 1-1/2 in. from end of open clip to center of strap; 27/32 in. from center of bracket mtg hole to center of strap; bracket located 115 deg from clip hinge; designed for intermediate shell octal base tubes; Birtcher (mfr) part 926B-16; Hazeltine Elec (contr) part 308-1004P2.	For V101 and V102
H110		Not used.	
H111		RETAINER, ELECTRON TUBE: nickel silver w/beryllium copper band; dull nickel plated; 1-29/32 in. lg by 1-1/2 in. w by 11/16 in. h by 1-7/32 in. id when closed; retains 1-7/32 in. dia tube case; Hazeltine Elec (mfr and contr) part 308-1006P1.	For V103
H112		GROMMET, RUBBER: svnthetic rubber, MIL-G-3036; 7/8 in. od of flange, 5/8 in. od of groove, 1/8 in. thk of flange, 3/8 in. dia of hole, 5/16 in. over-all height, 1/16 in. w of groove; Spec MIL-G-3036, part AN931-6-10; Hazeltine Elec (contr) part 359-1001P4.	Protection for insulated wires
H113		GROMMET, RUBBER: synthetic rubber per Spec MIL-G-3036; 1-5/16 in. dia of flange, 1 in. dia of groove, 5/32 in. thk flange, 11/16 in. dia of hole, 7/16 in. over-all h, 1/8 in. w of groove; AN part no. AN931A11-16; Hazeltine Elec (contr) part 359-1001P19.	Protection for insulated wires

TABLE 8-3. MAINTENANCE PARTS LIST — Cont'd.

REF. DESIG.	NOTES	NAME AND DESCRIPTION	LOCATING FUNCTION
H114	C	WASHER, NONMETALLIC: rd shape; nylon; 3/4 in. od by 0.209 in. id by 0.031 in. thk; Hazeltine Elec (mfr and contr) part 236-1033P4.	For tube shelf assembly
H115		Not used.	
H116		WASHER, FINISHING: brass, cadmium plated; 7/16 in. hole dia, 3/4 in. od by 1/8 in. thk; Hazeltine Elec (mfr and contr) part 1587-1026P1.	For spacing post used with E106
H117	C	WASHER, NONMETALLIC: square shape; nylon; 2 rd shaped holes, 0.209 in. dia; 1 in. lg by 1 in. w by 0.031 in. thk; Hazeltine Elec (mfr and contr) part 236-1029P1.	For E104 and E112
H118	C	GROMMET, RUBBER: synthetic rubber, MIL-G-3036; 1-1/16 in. od of flange, 13/16 in. od of groove, 1/8 in. thk of flange, 9/16 in. dia of hole, 1/2 in. over-all height, 1/4 in. w of groove; Spec MIL-G-3036, part AN931C9-13; Hazeltine Elec (contr) part 359-1001P28.	Protection for insulated wires
H119		GROMMET, RUBBER: synthetic rubber, MIL-G-3036; 7/8 in. od of flange, 5/8 in. od of groove, 1/8 in. thk of flange, 3/8 in. dia of hole, 3/8 in. over-all height, 1/8 in. w of groove; Spec MIL-G-3036, part AN931A6-10; Hazeltine Elec (contr) part 359-1001P15.	Protection for insulated wires
H120		RETAINER, ELECTRON TUBE: corrosion-resistant steel; 2-3/16 in. id by 1-1/8 in. h; stationary bracket 47 deg counterclockwise from hinge; two 3/16 in. dia mtg holes spaced 2-11/16 in. c to c; Hazeltine Elec (mfr and contr) part 308-1011P1.	For V155, V156 and V157
H121		Not used.	
H122	C	GROMMET, RUBBER: synthetic rubber, MIL-G-3036; 7/8 in. od of flange, 5/8 in. od of groove, 1/8 in. thk of flange, 3/8 in. dia of hole, 1/2 in. over-all height, 1/4 in. w of groove; Spec MIL-G-3036, part no. AN931C6-10; Hazeltine Elec (contr) part 359-1001P26.	Protection for insulated wires
H123		SHAFT LOCK, ELECTRONIC COMPONENT: brass, bright nickel plated; rd split bushing w/hexagonal head, 1/2 in. lg by 1/2 in. w across flats over-all; bushing threaded 3/8-32 NEF-2 by 1/4 in. lg; incl hexagonal nut 7/16 in. w across flats by 7/32 in. thk, tapped 3/8-32 NEF-2; Hazeltine Elec (mfr and contr) part 231-1002G1.	For R110 and R168
H124	C	POST, SPACING: half hard yellow brass, cadmium plated; 2-5/8 in. lg over-all, top portion 5/16 in. w across flats by 0.937 in. lg w/no. 10-24 NC-2 by 5/16 in. deep tapped hole, shank 0.190 in. max dia by 1.688 in. lg w/no. 10-24 NC-2 by 0.813 in. lg threaded portion; Hazeltine Elec (mfr and contr) part 1587-1060P1.	Spacer mounting for W101
H125		Not used.	
H126	C	PIN, CLEVIS: stainless steel; passivate finish; c/o clevis pin, ring and 4-1/4 in. lg chain; 1-15/16 in. lg by 9/32 in. dia, excluding ring and chain; Hazeltine Elec (mfr and contr) part 1620-5001G1.	For A116
H127		SHAFT LOCK, ELECTRONIC COMPONENT: stainless steel, black passivate finish; rd tongue style; c/o 1 base plate, 1 wing type lock and 1 knurled thumb screw; approx 1-1/8 in. lg by 15/16 in. w by 9/16 in. h over-all; Hazeltine Elec (mfr and contr) part 231-1099G1.	Knob lock for R167

TABLE 8-3. MAINTENANCE PARTS LIST — Cont'd.

REF. DESIG.	NOTES	NAME AND DESCRIPTION	LOCATING FUNCTION
H128		BOLT, EXTERNALLY RELIEVED BODY: annealed stainless steel, N Spec 46S18, class 7, type A; passivate finish; double chamfer head; slot drive; 11/16 in. h by 9/16 in. dia; no drilled or tapped holes; dim., externally relieved body, 5/32 in. first dia from head, 17/32 in. largest bearing surface of head to end of first shoulder or undercut, 1-1/16 in. lg; 1/4-20 NC-2 thd by 15/32 in. lg; Hazeltine Elec (mfr and contr) part 1587-1095P1.	Chassis mounting screw
H129	C	HANDLE, PANEL: annealed stainless steel, passivate finish; "U" shape, 5-3/8 in. lg by 2-5/16 in. w by 3/8 in. thk; ea end threaded 5/16-18 NC-2 by 11/16 in. lg; Hazeltine Elec (mfr and contr) part 231-1038P1.	Unit handle
H130	F	PIN, LOCATING: stainless steel, passivate finish; cylindrical shape, 21/32 in. lg by 0.502 in. max dia over-all; tapped 1/4-20 NC-2 axially full lg; knurled head 0.381 in. dia by 1/8 in. thk, opposite end chamfered 30 deg; Hazeltine Elec (mfr and contr) part 1587-1053P1.	Chassis centering pin
H131	C	HANDLE, PANEL: annealed stainless steel, passivate finish; "U" shape, 5-3/8 in. lg by 2-1/8 in. w by 3/8 in. thk; ea end threaded 5/16-18 NC-2 by 7/16 in. lg; Hazeltine Elec (mfr and contr) part 231-1038P2.	Unit handle
H132	F	PIN, STRAIGHT, HEADED: stainless steel, type 304; passivate finish; rd head; 1/4 in. dia of head, 3/32 in. height of head; shank dim., 3/16 in. nominal dia, 2-1/4 in. nominal lg under head; Hazeltine Elec (mfr and contr) part 1587-1082P3.	S153 bracket stop pin
H133		CLAMP, LOOP: nylon; 5/8 in. lg by 3/8 in. h over-all; designed to hold material 0.130 in. max dia; Burndy Engineering Co (mfr) type HP-2N; Hazeltine Elec (contr) part CP-1295-2.	Chassis cable clamp
H134		WASHER, FINISHING: annealed stainless steel, passivate finish; rd shape; 3/4 in. od by 9/32 in. id by 1/8 in. h over-all; Hazeltine Elec (mfr and contr) part 362-1018P1.	For H128
H135		Not used.	
H136	C	GROMMET, RUBBER: synthetic rubber, MIL-G-3036; 2-1/8 in. od of flange, 1-3/4 in. od of groove, 3/16 in. thk of flange, 1-1/2 in. dia of hole, 5/8 in. over-all h, 1/4 in. w of groove; Spec MIL-G-3036, part AN931C24-28; Hazeltine Elec (contr) part 359-1001P33.	Protection for insulated wires
H137		CLAMP, LOOP: nylon; 13/16 in. lg by 3/8 in. h over-all; designed to hold material 0.310 in. max dia; Burndy Engineering Co (mfr) type HP-5N; Hazeltine Elec (contr) part CP-1295-5.	Cable clamp
H138		CLAMP, LOOP: nylon; 7/64 in. lg by 3/8 in. h over-all; designed to hold material 0.59 in. max dia; Burndy Engineering Co (mfr) type HP-10N; Hazeltine Elec (contr) part CP-1295-10.	Cable clamp
H139		CLAMP, LOOP: nylon; 1 in. lg by 3/8 in. h over-all; designed to hold material 0.48 in. max dia; Burndy Engineering Co (mfr) type HP-8-N; Hazeltine Elec (contr) part CP-1295-8.	Cable clamp
H140		Same as H107.	Cable clamp

TABLE 8-3. MAINTENANCE PARTS LIST — Cont'd.

REF. DESIG.	NOTES	NAME AND DESCRIPTION	LOCATING FUNCTION
H141		GROMMET, RUBBER: synthetic rubber, MIL-G-3036; 15/16 in. od of flange, 11/16 in. od of groove, 1/8 in. thk of flange, 7/16 in. dia of hole, 1/2 in. over-all height, 1/4 in. w of groove; Spec MIL-C-3036, part no. AN931C7-11; Hazeltine Elec (contr) part 359-1001P27.	Cable feed-thru
H142		CLAMP, LOOP: nylon; 23/32 in. lg by 3/8 in. h over-all; designed to hold material 3/16 in. max dia; Burndy Engineering Co (mfr) type HP-3N; Hazeltine Elec (contr) part CP-1295-3.	Cable clamp
H143		Not used.	
H144	C	HANDLE, BAIL: stainless steel, painted USMC green; "C" shape, 6 in. lg by 3-1/2 in. w by 3/8 in. thk over-all; 5-1/4 in. lg grip; Hazeltine Elec (mfr and contr) part 1620-1009P1.	For A118
H145		LATCH, FASTENER: brass, cadmium plated; approx 8-7/8 in. lg by 1-1/2 in. w by 2-3/8 in. h over-all w/arm in right angle position; Hazeltine Elec (mfr and contr) part/dwg A-19227.	For chassis catch
H146	F	PIN, SHOULDER, HEADLESS: annealed stainless steel, N Spec 46S18, class 7, type A; 3 in. over-all, 19/32 in. min dia, 5/8 in. max dia; both ends chamfered, one end 15 deg by 5/16 in. lg, other end 1/32 in. lg; both ends drilled, 5/16 in. dia hole on one end, 0.3135 in. max dia hole on other end, both holes spaced 1-1/2 in. c to c; Hazeltine Elec (mfr and contr) part 1620-1003P1.	Connecting pin for A118
H147	F	PIN, GROOVED, HEADED: stainless steel; passivate finish; flat head; 3/8 in. dia by 1/16 in. h; shank, 5/16 in. nom dia, 1-1/16 in. nom grip lg, 1/8 in. lg chamfer, 15 deg chamfer, 1-3/16 in. nom lg under head; Hazeltine Elec (mfr and contr) part 1620-1001P1.	Secures H146 to A118
H148	F	PIN, SHOULDER, HEADLESS: stainless steel, passivate finish; cylindrical shape; 3/8 in. dia by 2-1/16 in. lg over-all; shank 0.249 in. dia by 1-3/32 in. lg w/axial hole 0.185 in. dia by 3/16 in. deep in end; Hazeltine Elec (mfr and contr) part 1620-1004P1.	Locating pin for case cover
H149	C	NUT, PLAIN, HEXAGON: annealed stainless steel, N Spec 46S18, class 7, type A; passivate finish; semifinished; chamfered bearing surface; 5/16-18 NC-2; 9/16 in. w across flats, 3/16 in. over-all height; Hazeltine Elec (mfr and contr) part 203-1037P1.	For H129 and H131
H150		Not used.	
H151	F	NUT, PLAIN, PLATE: stainless steel, passivate finish; 1/4-20 NC-2 by 7/32 in. deep; two lugs 1/8 in. thk; 1-5/8 in. lg by 5/8 in. w by 7/32 in. thk over-all; 9/16 in. center of nut to center of both mtg holes; Hazeltine Elec (mfr and contr) part 1593-1004P1.	For A118
H152	C	STEEL STRAPPING, FLAT: annealed stainless steel, passivate finish; 131 deg arc shape, 0.122 in. thk; three no. 10-24 NC-2 tapped holes spaced 60 deg apart on 2.781 in. radius; Hazeltine Elec (mfr and contr) part 1588-1127P1.	For B151
H153	C	WASHER, NONMETALLIC: rd shape; nylon; rd shaped hole, no. 10 bolt size; 0.437 in. od by 0.031 in. thk; Hazeltine Elec (mfr and contr) part 236-1003P4.	For spacing post MP109

TABLE 8-3. MAINTENANCE PARTS LIST — Cont'd.

REF. DESIG.	NOTES	NAME AND DESCRIPTION	LOCATING FUNCTION
H154		STRAP NUT, ELECTRON TUBE SOCKET: 1/16 in. thk brass, cadmium plated; 1-1/16 in. lg by 7/16 in. w by 1/16 in. h over-all; two no. 4-40 NC-2 tapped mtg holes spaced 0.875 in. c to c; Cinch Mfg Corp (mfr) part 1052; Hazeltine Elec (contr) part NTS-1000M-1.	For XV106
H155		STRAPNUT, ELECTRON TUBE SOCKET: 1/16 in. thk brass, cadmium plated; 1-1/16 in. lg by 17/32 in. w by 1/16 in. h over-all; two no. 4-40 NC-2 tapped mtg holes spaced 1.125 in. c to c; Cinch Mfg Corp (mfr) part 14511; Hazeltine Elec (contr) part NTS-1000N-11.	For XV105
H156	C	WASHER, NONMETALLIC: rd shape; glass cloth-silicone rubber; rd shaped hole, 0.260 in. dia by 9/16 in. thk; Hazeltine Elec (mfr and contr) part 236-1079P1.	For R152
H157	C	WASHER, NONMETALLIC: rd shape; nylon; rd shaped hole, no. 6 screw size; 5/16 in. od by 0.031 in. thk; Hazeltine Elec (mfr and contr) part 236-1114P2.	For XV156
H158	C	WASHER, NONMETALLIC: rd shape; nylon; rd shaped hole, no. 10 screw size; 0.438 in. od by 0.031 in. thk; Hazeltine Elec (mfr and contr) part 236-1114P4.	For W101 spacing post
H159	C	PIN, STRAIGHT, HEADED: stainless steel, type 304; passivate finish; rd head; 1/4 in. dia of head, 3/32 in. height of head; shank dim., 3/16 in. nominal dia, 1/2 in. nominal lg under head; Hazeltine Elec (mfr and contr) part 1587-1082P1.	Attaches MP107
H160	C	PIN, STRAIGHT, HEADED: stainless steel, type 304; passivate finish; rd head; 1/4 in. dia of head, 3/32 in. height of head; shank dim., 3/16 in. nominal dia, 1-1/8 in. nominal lg under head; Hazeltine Elec (mfr and contr) part 1587-1082P2.	Attaches A123
H161	C	BUSHING, SLEEVE: open end type; half hard yellow brass, N Spec 47B2; nickel plated; hexagon head; 5/8 in. w across flats by 3/32 in. h; 3/8-32 NEF-2 tapped full lg; 7/16 in. dia shank; 7/32 in. nom lg; Hazeltine Elec (mfr and contr) part 1587-1089P1.	For R167
H162	C	STUD, CONTINUOUS THREAD: non-magnetic corrosion resisting steel; no. 8-32 NC-2 thd; 4 in. lg over-all; Hazeltine Elec (mfr and contr) part 234-1008P4.	Attaches R152
HR101 thru HR150		Not used.	
HR151		HEATING ELEMENT, ELECTRICAL: 115 v, 150 w; sheathed, monel sheath; 8 in. lg by 1-1/2 in. w by 3/8 in. h excluding protruding terminals; Watlow Electric (mfr) part 1209D; Hazeltine Elec (contr) part 280-1090P1.	Space heater
HR152		Same as HR151.	Space heater
I151		LAMP, GLOW: neon gas; rated 1/4 w, 67 v ac striking voltage; 1-9/16 in. max over-all height; external resistance required, 30,000 ohms for 105 to 125 v operation; Spec MIL-E-1B, MIL type JAN-991; Hazeltine Elec (contr) part 277-1005P1.	Warning lamp
I152		Same as I151.	Warning lamp

TABLE 8-3. MAINTENANCE PARTS LIST — Cont'd.

REF. DESIG.	NOTES	NAME AND DESCRIPTION	LOCATING FUNCTION
I153		Same as I151.	Warning lamp
J101 thru J150		Not used.	
J151		CONNECTOR, RECEPTACLE, ELECTRICAL: 23 contacts; 1 connector mating end; 5 male contacts, pin type; 41 amp, 1250 v dc, 900 v ac working voltage; 18 male contacts, pin type; 22 amp, 1250 v dc, 900 v ac working voltage; dielectric material per Spec MIL-C-5015B; straight shape; 1-1/2 in. lg by 2-1/4 in. w by 2-1/4 in. h excluding terminals; w/inclosing aluminum base alloy shell, resistant to corrosion; polarized; locking type; 2 in.-18 thread on shell for mating w/coupling nut; four 0.173 in. dia mtg holes on 1-3/4 in. by 1-3/4 in. mtg centers; Spec MIL-C-5015B, type AN3102C-32-13P; Hazeltine Elec (contr) part 276-1141-P1.	Power input
J152		CONNECTOR, RECEPTACLE, ELECTRICAL: 1 contact; 1 connector mating end; contact data, 1 rd coax female contact, 52 ohms, 500 v max; low loss plastic insert; straight shape; approx 1-1/16 in. lg by 1 in. sq, excluding protruding terminal; w/partially inclosing shell, brass, resistant to corrosion; nonlocking type, 5/8-24 NEF-2 thread on shell for mating w/coupling nut; four 1/8 in. dia mtg holes on flange on 23/32 in. by 23/32 in. mtg centers; Spec MIL-C-71A, N dwg RE49F559, MIL type UG-58A/U; Industrial Products (mfr) part 7225, Hazeltine Elec (contr) part 276-1030P2.	External trigger input
J153	B	CONNECTOR, RECEPTACLE, ELECTRICAL: 1 male contact; 1 connector mating end; contact data, designed for nominal voltage rating of 500 v peak; straight shape; 0.715 in. lg by 11/16 in. w by 11/16 in. h excluding protruding terminal; resistant to corrosion; any size RG cable accommodated; four no. 3-56 NF-2 tapped mtg holes on 1/2 in. mtg centers; AN type UG-290/U; Industrial Products (mfr) part 2700; Hazeltine Elec (contr) part 276-1061P1.	Thyratron trigger test
J154		Not used.	
J155		CONNECTOR, RECEPTACLE, ELECTRICAL: 1 male contact; 1 connector mating end; contact data, designed for peak voltage not exceeding 5000 v; rubber dielectric; straight shape; 3-5/8 in. lg by 1-3/8 in. sq over-all excluding protruding contact; w/inclosing shell, brass, tin plated, not resistant to corrosion; nonlocking type; four mtg holes 0.169 in. dia on 1 in. by 1 in. mtg centers located on flange; mates w/UG-182A/U connector; Industrial Products (mfr) type 5400; Hazeltine Elec (contr) part 276-1108P1.	Pulse output to transmitter
J156		Same as J153.	Trigger output
J157		Same as J152.	IFF pre-trigger connector
K101 thru K150		Not used.	
K151		RELAY, ARMATURE: nonpile-up type, spdt, normally closed, single break, ac, 115 v, 1/2 amp, noninductive; 2 windings, both non-inductive, dc, 500 ohms ±10% dc resistance ea winding, 0.011 amp, polarized wound; 1-1/2 in. lg by 1-1/2 in. w by 3-3/32 in. h over-all; Sigma Instruments (mfr) type 5RJ6 Spec 90135; Hazeltine Elec (contr) part 1587-1125P1.	Overload meter

TABLE 8-3. MAINTENANCE PARTS LIST — Cont'd.

REF. DESIG.	NOTES	NAME AND DESCRIPTION	LOCATING FUNCTION
K152		RELAY, SOLENOID: nonpile-up type, dpst, normally open, double break; contacts 29 v dc, 55 amp, 115 v ac, 400 cycles; coil, one winding, 24 v dc min, 30 v dc max, 110 ohms ±10% dc resistance of winding; 3 in. lg by 2-1/32 in. w by 2-11/16 in. h over-all; Leach Relay (mfr) type 7064-12D; Hazeltine Elec (contr) part 271-1051P1.	Radiate power relay
L101 thru L150		Not used.	
L151		REACTOR: swinging inductance type; one coil, 8.5 h ±5% inductance, 360 ma dc, 70 ohms ±15% dc resistance; 15,000 v rms test voltage; 9-11/16 in. lg by 5-13/32 in. w by 7-11/32 in. h, excluding terminals; Spec MIL-T-27, MIL type TF1A37YY; Hazeltine Elec (mfr and contr) part 292-1287G1.	Resonant charging choke
L152	F	COIL, RADIO FREQUENCY: single layer wound, 26 turns no. 14 AWG, heavy Formex insulation; 39 uh ±190 at 2.5 mc; Hazeltine Elec (mfr and contr) part 363-1113G1.	Current limiter for Z161
MP101	C	BEARING, PLAIN, FLANGED: bronze oilite; 0.376 in. max id, 0.503 in. max od, 3/8 in. lg over-all, 5/8 in. max od of flange, 1/16 in. max w of flange; self impregnated; Chrysler Corp (mfr) part F-562; Hazeltine Elec (contr) part BB-1217.	For shaft MP102
MP102	C	SHAFT, RIGID: stainless steel, passivate finish; cylindrical shape, 3-15/16 in. lg by 7/16 in. dia over-all; first dia 1/4 in. by 1-1/4 in. lg w/13/32 in. lg flat, second dia of 0.3745 in. by 1-15/16 in. lg, third dia 7/16 in. by 3/4 in. lg and flatted; Hazeltine Elec (mfr and contr) part/dwg SM-5671.	For MP103
MP103	C	GEAR, BEVEL: straight type; 14 teeth, 20 deg pressure angle, 1 in. pitch dia, 14 diametral pitch; 7/8 in. od, 7/16 in. dia bore, 47/64 in. lg over-all, 1-1/16 in. backing to pitch line; Hazeltine Elec (mfr and contr) part/dwg GR-1645.	Part of T155 bracket assembly
MP104	C	GEAR, BEVEL: straight type; 14 teeth, 20 deg pressure angle, 1 in. pitch dia, 14 diametral pitch; 7/8 in. od, 1/2 in. dia bore, 47/64 in. lg over-all, 1-1/16 in. backing to pitch line; Hazeltine Elec (mfr and contr) part/dwg GR-1645-1.	Part of T155 bracket assembly
MP105	B	KNOB: set screw type; 27/32 in. lg by 1-3/4 in. dia; black; marked w/single line; Kurz-Kasch (mfr) part S-381-64-L-B-BB; Hazeltine Elec (contr) part/dwg MP-1675.	
MP106		NUT, PACKING, HEXAGON: brass, nickel plated; semi-finished, chamfered bearing surface; 3/8-32 NEF-2 thd; 5/8 in. w across flats, 7/32 in. h over-all incl gasket and sleeve; Radio Frequency Lab (mfr) part H-1268; Hazeltine Elec (contr) part 203-1003G2.	For MP105
MP107		CLAMP, LOOP: aluminum w/rubber cushion; loop type; 25/64 in. lg from 0.221 in. dia mtg hole to center of loop by 1/2 in. w by 0.032 in. thk; designed to hold material 1/8 in. max dia; Hazeltine Elec (mfr and contr) part 214-1022P2.	Interconnecting cable clamp

TABLE 8-3. MAINTENANCE PARTS LIST — Cont'd.

REF. DESIG.	NOTES	NAME AND DESCRIPTION	LOCATING FUNCTION
MP108		COVER, ELECTRICAL CONNECTOR: 0.694 in. lg by 9/16 in. dia over-all; bayonet slot mtg for BNC female connector; N dwg RE49F331, AN type CW-123A/U; Industrial Products (mfr) part 1500; Hazeltine Elec (contr) part 218-1005P3.	Cap for J152 and J157
MP109	C	POST, SPACING: half hard yellow brass, cadmium plated; 1-1/8 in. lg over-all, top portion 5/16 in. w across flats by 0.437 in. lg w/no. 10-24 NC-2 by 5/16 in. deep tapped hole, shank 0.190 in. max dia by 0.688 in. lg w/no. 10-24 NC-2 by 0.813 in. lg threaded portion; Hazeltine Elec (mfr and contr) part 1587-1060P2.	Cable assembly spacer mounting
MP110		CLIP: phosphor bronze, nickel pl, 0.657 in. w by 23/32 in. lg by 19/32 in. h o/a; 5/8 in. max opening; 0.140 in. max dia mtg hole in base; Prestole (mfr) part 500-625; Hazeltine (mfr) part FC-1045-1.	Capacitor clip
MP111		RING, RETAINING: carbon steel, cadmium plated or brass, nickel plated; rd shape, 23/32 in. od by 0.469 in. id by 0.032 in. thk; integral tab 0.110 in. w bent 0.055 in. lg at 90 deg; Hazeltine Elec (mfr and contr) part 362-1016P1.	For S101
MP112	C	ARM, LATCH: half hard yellow brass, cadmium plated; rd rod, closed loop at one end, straight for 13/16 in. lg, bent 9 deg from horizontal plane 8-1/16 in. lg; no. 6-32 NC-2 by 5/8 in. lg thd at end opposite loop; Hazeltine Elec (mfr and contr) part 1587-1085P1.	Part of chassis latch assembly
MP113	C	STAY, LATCH: half hard yellow brass, cadmium plated; cylindrical shape w/hexagon head; 1-1/8 in. lg by 0.225 in. dia shank by 5/16 in. w across flats of head; no. 6-32 NC-2 tapped hole 7/16 in. deep in head, 0.161 in. dia hole 11/16 in. deep in shank; Hazeltine Elec (mfr and contr) part 1587-1092P1.	For chassis latch
MP114	F	SHAFT, ROLLER, CHASSIS: annealed stainless steel, passivate finish; cylindrical shank, sq at one end, chamfered opposite end; cylindrical portion 0.305 in. dia by 1-5/32 in. lg, sq end portion 1/2 in. lg by 1/2 in. w by 1/2 in. h w/0.196 in. dia radial hole; Hazeltine Elec (mfr and contr) part 1587-1093P1.	For MP105
MP115	F	SHAFT, ROLLER, CHASSIS: annealed stainless steel, passivate finish; cylindrical shank, sq at one end, chamfered opposite end; cylindrical portion 0.305 in. dia by 55/64 in. lg, sq end portion 1/2 in. lg by 1/2 in. w by 1/2 in. h w/0.196 in. dia radial hole; Hazeltine Elec (mfr and contr) part 1587-1093P2.	For MP105
MP116	F	ROLLER, CHASSIS: half hard yellow brass, nickel plated; rd shape, 1-1/8 in. od by 5/16 in. id by 7/16 in. thk over-all; Hazeltine Elec (mfr and contr) part 1587-1094P1.	Facilitates chassis movement in cabinet
MP117	C	FILTER, AIR CONDITIONING: 4 mesh galvanized steel wire screen, cadmium plated; rd shape, 6 in. dia by 1/4 in. deep; spherically formed in back; 6 slots equally spaced on periphery on 5-9/16 in. bolt circle; Hazeltine Elec (mfr and contr) part 1587-1133P1.	Screen for B151
MP118	C	TERMINAL STRIP, GROUNDING: annealed yellow brass, bright alloy plated; irregular shape, 3 in. lg by 1-7/16 in. w by 0.197 in. h over-all; Hazeltine Elec (mfr and contr) part 1587-1134P1.	Ground for J151
MP119	C	PANEL, BLANK: plastic; 3-1/8 in. lg by 1-3/16 in. w by 1/4 in. thk, excluding inserts; three 0.196 in. dia mtg holes counterbored 3/8 in. dia by 5/32 in. deep triangularly spaced; incl 2 inserts; Hazeltine Elec (mfr and contr) part 1587-1138G1.	Filter assembly center barrier panel

TABLE 8-3. MAINTENANCE PARTS LIST — Cont'd.

REF. DESIG.	NOTES	NAME AND DESCRIPTION	LOCATING FUNCTION
MP120		GASKET: sponge rubber; 8-1/2 in. lg x 1-13/16 in. w x 5/16 in. thk; three 5/16 in. dia holes 3-7/8 in. c to c 9/16 in. from edge; Hazeltine Elec (mfr and contr) part GA-1762.	
N101	C	PLATE, INSTRUCTION: aluminum; white inscription on red background; inscribed "DANGER HIGH VOLTAGE"; 3 in. lg by 1 in. w by 0.040 in. thk over-all; two 0.128 in. dia mtg holes spaced 2-3/4 in. c to c; Hazeltine Elec (mfr and contr) part 249-1037P1.	Warning label
N102	C	PLATE, INSTRUCTION: plexiglass; red inscription on clear background; inscribed "DANGER HIGH VOLTAGE"; 6 in. lg by 4-3/16 in. w by 1/8 in. thk over-all; four 0.221 in. dia mtg holes on 4-1/8 by 3/4 in. mtg centers; Hazeltine Elec (mfr and contr) part 1587-1123P1.	Warning label
N103		Not used.	
N104	C	PLATE, INSTRUCTION: aluminum; dull red inscription on red background; inscribed w/sw warning data; 2-7/8 in. lg by 2-1/4 in. w by 0.040 in. thk over-all; three 0.169 in. dia mtg holes, two holes on 1-1/4 in. by 7/8 in. mtg centers, one hole centered 1-13/16 in. from other two holes; Hazeltine Elec (mfr and contr) part 1587-1074P1.	Warning label
N105	C	PLATE, DESIGNATION: plastic; white inscription on black background; inscribed "E101, 203, 202, O1, NC, B34A, B34B, NC, O1"; 4-11/32 in. lg by 5/8 in. w by 1/16 in. thk over-all; two 11/64 in. dia mtg holes spaced 3-15/16 in. c to c; Hazeltine Elec (mfr and contr) part 1587-1032P3.	For E101
N106	C	PLATE, DESIGNATION: plastic; white inscription on black background; inscribed "E102, 4A1, 4A2, 4A3, 4A4, O1, 51A, O1, B41"; 4-11/32 in. lg by 5/8 in. w by 1/16 in. thk over-all; two 11/64 in. dia mtg holes spaced 3-15/16 in. c to c; Hazeltine Elec (mfr and contr) part 1587-1032P2.	For E102
N107		PLATE, DESIGNATION: plastic; white inscription on black background; inscribed "E152, 203, 202, O1, B43A, B43B"; 3-1/32 in. lg by 5/8 in. w by 1/16 in. thk over-all; two 11/64 in. dia mtg holes spaced 2-5/8 in. c to c; Hazeltine Elec (mfr and contr) part 1587-1045P2.	For E152
N108		PLATE, DESIGNATION: plastic; black inscription on white background; inscribed "O1, G96"; 1-23/32 in. lg by 5/8 in. w by 1/16 in. thk; two 11/64 in. dia mtg holes spaced 1-5/16 in. c to c; Hazeltine Elec part NP-2779.	For E119
O101		Not used.	
O102		STRAP, RETAINING: stainless steel, passivate finish; 25/32 in. lg by 3/8 in. w by 25/64 in. h over-all; one 0.193 in. dia hole at one end; Hazeltine Elec (mfr and contr) part 1620-1005P1.	Secures H126 to A118
O103		CLIP, ELECTRICAL: w/ejector spring; phosphor bronze, silver plated clip, stainless steel, passivate finish spring; 2-11/16 in. lg by 1-1/2 in. w by 1 in. h, excluding pin; no insulation material; Navy type 28019A; Hazeltine Elec (mfr and contr) part 343-1009G3.	For R151, R156 and R157

TABLE 8-3. MAINTENANCE PARTS LIST — Cont'd.

REF. DESIG.	NOTES	NAME AND DESCRIPTION	LOCATING FUNCTION
O104		GASKET: neoprene, Spec JAN-R-1149, class I; 2-1/4 in. lg of aperture; 2-1/4 in. w of aperture, 3/16 in. thk, 1/4 in. inside corner radius, 3/8 in. bearing surface width, 3 in. over-all width, 5/8 in. outside corner radius, 3 in. over-all lg; Hazeltine Elec (mfr and contr) part 1587-1008P1.	Part of mounting for J151
O105 and O106		Not used.	
O107		SHIM: sq shape; aluminum alloy; 2-1/4 in. lg by 2-1/4 in. w by 1/4 in. thk over-all; four 0.169 in. dia mtg holes on 1-3/4 in. by 1-3/4 in. mtg centers; one 2-1/16 in. dia cut-out in center of shim; Hazeltine Elec (mfr and contr) part 1587-1010P1.	Used between O108
O108		GASKET: aluminum screen; 2-1/16 in. dia of aperture, 0.020 in. thk, 4 bolt holes, 0.196 in. dia of bolt holes, 1-3/4 in. c to c distance between bolt holes, along the lg, 1-3/4 in. c to c distance between bolt holes along the width, 2-1/4 in. over-all width, 1/4 in. outside corner radius, 2-1/4 in. over-all lg, 1/4 in. distance from outside edge to center of first bolt hole along the sides; Hazeltine Elec (mfr and contr) part 1587-1135P1.	Part of mounting for J151
O109	F	PLATE, REINFORCING: steel; passivated; 47/64 in. lg by 5/16 in. w by 0.032 in. thk; two 0.177 in. dia mtg holes spaced 7/16 in. c to c; Hazeltine Elec (mfr and contr) part 224-1003P2.	For E101, E102 and E152
O110	C	BUSHING, PLAIN, SLEEVE: aluminum alloy; 0.221 in. max id body by 3/4 in. max od body by 1-11/32 in. max over-all lg; Hazeltine Elec (mfr and contr) part 1587-1034P1.	For E106
O111	C	GASKET: sponge rubber; 9-3/4 in. lg of aperture, 9-3/4 in. w of aperture, 1/8 in. thk; 7/8 in. bearing surface width; 8 bolt holes, 0.221 in. dia of bolt holes, 5-7/16 in. c to c distance between bolt holes along the lg, 5-7/16 in. c to c distance between bolt holes along the width, 11-1/2 in. over-all width, 11-1/2 in. over-all lg; 3/4 in. distance from outside edge to center of first bolt hole along the sides; Hazeltine Elec (mfr and contr) part 1587-1078P1.	For B151 filter
O112		Not used.	
O113	F	WASHER, FLAT: black neoprene, Spec JAN-R-1149, class I; 3/16 in. of aperture by 11/16 in. od by 1/8 in. thk; Hazeltine Elec (mfr and contr) part 1587-1096P1.	For H128
O114	C	RUBBER STRIP, CELLULAR: neoprene; rectangular shape; 23-1/16 in. lg by 1/2 in. w by 3/16 in. thk over-all; Globe Rubber Works (mfr) no. 315; Hazeltine Elec (contr) part 287-1034P2.	Front panel gasket
O115		CLIP, ELECTRICAL: phosphor bronze; cadmium plated; 1-7/16 in. lg by 1-1/8 in. w by 2-1/2 in. h over-all; N type 28018A; Hazeltine Elec (mfr and contr) part 343-1008G3.	Mounting for R169
O116	A	INSULATOR, PLATE: glass bonded mica; 2-1/8 in. lg by 1-1/8 in. w by 1/8 in. thk over-all; two 0.169 in. dia mtg holes spaced 1-3/4 in. c to c; one 9/32 in. dia located in center of plate; Hazeltine Elec (mfr and contr) part 1587-1036P1.	Retains H119

TABLE 8-3. MAINTENANCE PARTS LIST — Cont'd.

REF. DESIG.	NOTES	NAME AND DESCRIPTION	LOCATING FUNCTION
O117		FILTER, AIR CONDITIONING: 4 double layers aluminum mesh; sq shape; 8 in. lg by 8 in. w by 1-3/8 in. over-all, before compression; incl spring steel tension spring on back and drain hole at ea corner; American Air Filter (mfr) dwg C56-1405; Hazeltine Elec (contr) part SN-1035-3.	For B151
O118 thru O120		Not used.	
O121	C	COVER, ELECTRICAL CONNECTOR: metallic material, resistant to corrosion; 1-17/32 in. lg by 1-3/8 in. dia, excluding chain; mounted by 1-3/16-18 NEF-2 internal thread; Hazeltine Elec (mfr and contr) part 1588-5038G1.	Cap for J155
O122		Not used.	
O123	A	GASKET: neoprene, Spec JAN-R-1149, class I; 15/32 in. dia of aperture by 15/16 in. od by 1/16 in. thk; Hazeltine Elec (mfr and contr) part 1587-1068P1.	Bushing gasket for R167
O124	F	PLATE, REINFORCEMENT: steel; passivated; 9/16 in. lg by 17/64 in. w by 0.032 in. thk; two 0.161 in. dia mtg holes spaced 5/16 c to c; Hazeltine Elec (mfr and contr) part 224-1003P1.	For E151
O125	B	RING, RETAINING: carbon spring steel; 0.145 in. id; 0.025 in. major thk; Waldes Kohinoor (mfr) ring 5133-18-MI; Hazeltine Elec (contr) part 362-1015P7.	For H150, H132 and O117
O126	A	GASKET: neoprene, Spec JAN-R-1149, class I; 6-7/8 in. lg by 6-7/8 in. w of aperture; 0.050 in. thk by 19/32 in. bearing surface width; 8-1/16 in. over-all width by 8-1/16 in. over-all lg; Hazeltine Elec (mfr and contr) part 1587-1070P1.	For B151 filter
O127	F	SPRING, LATCH: flat type; for chassis latch; clock spring steel no. 1095, cadmium plated; 4-5/8 in. lg by 7/16 in. w by 0.062 in. thk; two 0.187 in. dia mtg holes spaced 1 in. c to c; Hazeltine Elec (mfr and contr) part/dwg SP-1605.	Latch spring for H425
O128	C	CLIP, ROD, HANDLE: spring steel, cadmium plated; irregular "U" shape; 1-1/8 in. lg by 5/16 in. w by 1-1/8 in. h over-all; two 0.144 in. dia holes spaced 5/16 in. c to c; Hazeltine Elec (mfr and contr) part 1587-1081P1.	For H150
O129		BOOT, DUST AND MOISTURE SEAL: brass, nickel plated; semi-finished; chamfered bearing surface; 15/32-32 NS-2 thd by 3/4 in. w across flats by 5/16 in. h over-all including gasket and sleeve; Radio Frequency Lab (mfr) part H-1267; Hazeltine Elec (contr) part 203-1003G1.	For S152
O130	C	RUBBER STRIP, CELLULAR: sponge rubber; 3/16 in. thk, 5-1/2 in. c to c between first and second and third and fourth holes; 5-3/4 in. c to c between second and third holes; 7/8 in. w over-all; 21-1/4 in. lg over-all; 3/8 in. from outside edge of lg to center of all bolt holes, 2-1/4 in. from outside edge of w to center of first and fourth holes; Globe Rubber Works (mfr) part 315; Hazeltine Elec (contr) part 1587-1120P1.	Front panel gasket

TABLE 8-3. MAINTENANCE PARTS LIST — Cont'd.

REF. DESIG.	NOTES	NAME AND DESCRIPTION	LOCATING FUNCTION
O131		GASKET: aluminum wire mesh impregnated w/synthetic rubber; 5/8 in. dia of aperture by 0.020 in. thk; four 0.128 in. dia bolt holes located on 0.719 in. sq mtg centers; 1 in. w over-all; 9/64 in. outside corner radius; 1 in. lg over-all; Connecticut Hard Rubber Co (mfr) part 8020; Hazeltine Elec (contr) part 287-1032P4.	For J152
O132		GASKET: aluminum screen impregnated w/fairprene; 1 in. dia of aperture by 0.020 in. thk; 4 bolt holes, 0.196 in. dia of bolt holes, 1 in. c to c distance between bolt holes along the sides, 1-3/8 in. w over-all; 1-3/8 in. lg over-all; 3/16 in. distance from outside edge to center of bolt holes; Hazeltine Elec (mfr and contr) part 1588-1057P2.	For J155
O133	A	GASKET: pure gum natural rubber; rectangular shape; 26-11/16 in. lg by 22-3/16 in. w by 1/4 in. thk over-all; w/4 corners rounded on 1/8 in. radius; single hole 26-1/16 in. lg by 21-9/16 in. w, w/4 corners rounded on 7/32 in. radius; Hazeltine Elec (mfr and contr) part 1620-1012P1.	For A116
O134	F	PLATE, REINFORCING: brass, nickel plated; rectangular shape; 7/8 in. lg by 3/8 in. w by 0.122 in. thk over-all; two no. 8-32 NC-2 tapped mtg holes spaced 1/2 in. c to c; Hazeltine Elec (mfr and contr) part 224-1008P3.	For O127
O135	B	CLIP, ELECTRICAL: beryllium copper; silver or tin plated; 1-1/8 in. lg by 5/8 in. w by 9/16 in. h; steatite insulation; James Millen (mfr) type 36002B; Hazeltine Elec (contr) part 376-1001P1.	For V153 and V154
O136		CLIP, ELECTRICAL: beryllium copper; silver or tin plated; 1-1/2 in. lg by 13/16 in. w by 13/16 in. h; steatite insulation; James Millen (mfr) type 36001B; Hazeltine Elec (contr) part 376-1001P2.	For V155, V156 and V157
O137		Not used.	
O138	C	FERRULE, ELECTRICAL CONDUCTOR: half hard yellow brass; 1/2 in. lg by 11/16 in. od by 0.323 in. id; closed end; Hazeltine Elec (mfr and contr) part 1587-1112P1.	Termination for RG-64A/U cable
O139		CLIP, RETAINING: 0.051 in. dia stainless steel, spring temper, passivate finish; 7/8 in. lg by approx 0.289 in. w by approx 0.608 in. h over-all; Hazeltine Elec (mfr and contr) part 1620-1006P1.	For A118
O140	C	ROLLER, BEARING: rd shape; brass; flat end; solid; 7/16 in. lg by 1-1/16 in. od by 0.315 in. id; Hazeltine Elec (mfr and contr) part 1620-1014P1.	For inner case upper mount assembly
O141		Not used.	
O142	C	BUSHING, PLAIN, SLEEVE: stainless steel, passivate finish; cylindrical shape; 5/8 in. lg by 5/8 in. od; one id 0.390 in. by 1/2 in. lg, other id 0.328 in. by 1/8 in. lg; Hazeltine Elec (mfr and contr) part 204-1009P1.	For H131
O143		Not used.	

TABLE 8-3. MAINTENANCE PARTS LIST — Cont'd.

REF. DESIG.	NOTES	NAME AND DESCRIPTION	LOCATING FUNCTION
O144	F	BLOCK, MOUNTING: aluminum alloy, painted USMC green; rectangular shape w/ea corner chamfered; 4-3/4 in. lg by 7/8 in. w by 7/8 in. h over-all; two 0.348 in. dia mtg holes spaced 2 in. c to c; incl two dowel pins spaced 3-1/4 in. c to c; Hazeltine Elec (mfr and contr) part 1620-1010G1.	Retaining block for H144
O145	C	VALVE, SAFETY RELIEF: aluminum, painted USMC green; air; mtg thd 3/4-16 NF-2 by 19/32 in. lg from body on one end; fixed; 2-3/4 in. dia by 9/16 in. lg excluding mtg thd; A. Schrader (mfr) part 4594; Hazeltine Elec (contr) part 381-1012P1.	Air pressure valve for A118
O146	C	BUSHING, SLEEVE: stainless steel, passivate finish; 5/16 in. lg by 3/4 in. od by 17/32 in. id; shoulder 0.624 in. max od by 1/4 in. deep; Hazeltine Elec (mfr and contr) part 1620-1015P1.	Bushing for unit inner case
O147	C	GASKET: aluminum screen impregnated w/fairprene; two 7/16 in. dia apertures, 0.020 in. thk; 12 bolt holes, four 0.196 in. dia bolt holes, eight 0.136 in. dia holes, 1-1/8 in. c to c distance between bolt holes along the width, 2-1/4 in. c to c distance between bolt holes along the lg, 1/2 in. c to c distance between bolt holes at apertures; 1-1/4 in. w by 2-9/16 in. lg over-all; 5/16 in. distance from outside edge to center of bolt holes along the width, 5/32 in. distance from outside edge to center of bolt holes along the lg; Hazeltine Elec (mfr and contr) part GA-1756.	For J153 and J156
R101	B	RESISTOR, FIXED, COMPOSITION: 1000 ohms, ±5%; 1 w; F characteristic; body 0.760 in. max lg by 0.264 in. max od; insulated; Spec MIL-R-11A, MIL type RC30BF102J; Hazeltine Elec (contr) part 280-1002P73.	Decoupling resistor
R102	B	RESISTOR, FIXED, COMPOSITION: 150,000 ohms, ±5%; 1 w; F characteristic; body 0.760 in. max lg by 0.264 in. max od; insulated; Spec MIL-R-11A, MIL type RC30BF154J; Hazeltine Elec (contr) part 280-1002P151.	Plate load for V101
R103		Same as R102.	Plate load for V101
R104		Same as R102.	Plate load for V101
R105		Same as R102.	Plate load for V101
R106	B	RESISTOR, FIXED, COMPOSITION: 1 meg, ±5%; 1/2 w; F characteristic; body 0.416 in. max lg by 0.161 in. max od; insulated; Spec MIL-R-11A, MIL type RC20BF105J; Hazeltine Elec (contr) part 280-1015P181.	Grid return for V101
R107	B	RESISTOR, FIXED, COMPOSITION: 1.5 meg, ±5%; 1/2 w; F characteristic; body 0.416 in. max lg by 0.161 in. max od; insulated; Spec MIL-R-11A, MIL type RC20BF155J; Hazeltine Elec (contr) part 280-1015P187.	Grid return for V101
R108		Same as R107.	Grid return for V101
R109	B	RESISTOR, FIXED, COMPOSITION: 10,000 ohms, ±5%; 1/2 w; F characteristic; body 0.416 in. max lg by 0.161 in. max od; insulated; Spec MIL-R-11A, MIL type RC20BF103J; Hazeltine Elec (contr) part 280-1015P109.	Cathode load for V101

TABLE 8-3. MAINTENANCE PARTS LIST — Cont'd.

REF. DESIG.	NOTES	NAME AND DESCRIPTION	LOCATING FUNCTION
R110		RESISTOR, VARIABLE: composition element; 1 section, 500,000 ohms, ±10%; 2 w nom power rating; std A taper; metal case, enclosed 1-3/32 in. dia by 21/32 in. deep; single shaft, 1/4 in. dia, 7/8 in. lg from surface; Spec MIL-R-94A, MIL type RV4ATSD504A; Hazeltine Elec (contr) part 240-1004P23.	PRF control
R111	B	RESISTOR, FIXED, COMPOSITION: 47,000 ohms, ±5%; 1/2 w; F characteristic; body 0.416 in. max lg by 0.161 in. max od; insulated; Spec MIL-R-11A, MIL type RC20BF473J; Hazeltine Elec (contr) part 280-1015P133.	Grid return for V101 and V102
R112	B	RESISTOR, FIXED, COMPOSITION: 4700 ohms, ±5%; 1 w; F characteristic; body 0.760 in. max lg by 0.264 in. max od; insulated; Spec MIL-R-11A, MIL type RC30BF472J; Hazeltine Elec (contr) part 280-1002P97.	Cathode for V102
R113	B	RESISTOR, FIXED, COMPOSITION: 330,000 ohms, ±5%; 1 w; F characteristic; body 0.760 in. max lg by 0.264 in. max od; insulated; Spec MIL-R-11A, MIL type RC30BF334J; Hazeltine Elec (contr) part 280-1002P163.	Voltage divider
R114		Same as R113.	Voltage divider
R115		Same as R113.	Voltage divider
R116		Same as R113.	Voltage divider
R117		Same as R101.	Decoupling for T102
R118	B	RESISTOR, FIXED, COMPOSITION: 10,000 ohms, ±5%; 1 w; F characteristic; body 0.760 in. max lg by 0.264 in. max od; insulated; Spec MIL-R-11A, MIL type RC30BF103J; Hazeltine Elec (contr) part 280-1002P109.	Cathode bias for V102
R119		Same as R109.	Grid return for V104
R120	B	RESISTOR, FIXED, COMPOSITION: 1500 ohms, ±5%; 1/2 w; F characteristic; body 0.416 in. max lg by 0.161 in. max od; insulated; Spec MIL-R-11A, MIL type RC20BF152J; Hazeltine Elec (contr) part 280-1015P79.	Grid current limiter for V104
R121		Not used.	
R122		Same as R118.	Cathode load for V103
R123		Not used.	
R124		Same as R102.	Voltage divider
R125		RESISTOR, FIXED, COMPOSITION: 680,000 ohms, ±5%; 1 w; F characteristic; body 0.760 in. max lg by 0.264 in. max od; insulated; Spec MIL-R-11A, MIL type RC30BF684J; Hazeltine Elec (contr) part 280-1002P175.	Voltage divider
R126		Same as R125.	Voltage divider

TABLE 8-3. MAINTENANCE PARTS LIST — Cont'd.

REF. DESIG.	NOTES	NAME AND DESCRIPTION	LOCATING FUNCTION
R127	B	RESISTOR, FIXED, COMPOSITION: 220,000 ohms, ±5%; 1 w; F characteristic; body 0.760 in. max lg by 0.264 in. max od; insulated; Spec MIL-R-11A, MIL type RC30BF224J; Hazeltine Elec (contr) part 280-1002P157.	Cathode bias for V105A
R128	B	RESISTOR, FIXED, COMPOSITION: 22,000 ohms, ±5%; 1/2 w; F characteristic; body 0.416 in. max lg by 0.161 in. max od; insulated; Spec MIL-R-11A, MIL type RC20BF223J; Hazeltine Elec (contr) part 280-1015P121.	Cathode bias for V105A
R129		RESISTOR, FIXED, COMPOSITION: 150 ohms, ±5%; 1/2 w; F characteristic; body 0.416 in. max lg by 0.161 in. max od; insulated; Spec MIL-R-11A, MIL type RC20BF151J; Hazeltine Elec (contr) part 280-1015P43.	Terminating resistor for J157
R130	B	RESISTOR, FIXED, COMPOSITION: 68,000 ohms, ±5%; 1/2 w; F characteristic; body 0.416 in. max lg by 0.161 in. max od; insulated; Spec MIL-R-11A, MIL type RC20BF683J; Hazeltine Elec (contr) part 280-1015P139.	C110 discharge pass
R131	B	RESISTOR, FIXED, COMPOSITION: 4700 ohms, ±5%; 1/2 w; F characteristic; body 0.416 in. max lg by 0.161 in. max od; insulated; Spec MIL-R-11A, MIL type RC20BF472J; Hazeltine Elec (contr) part 280-1015P97.	Termination for DL101
R132		RESISTOR, FIXED, COMPOSITION: 470,000 ohms, ±5%; 1/2 w; F characteristic; body 0.416 in. max lg by 0.161 in. max od; insulated; Spec MIL-R-11A, MIL type RC20BF474J; Hazeltine Elec (contr) part 280-1015P169.	V105B grid
R133	B	RESISTOR, FIXED, COMPOSITION: 33,000 ohms, ±5%; 1/2 w; F characteristic; body 0.416 in. max lg by 0.161 in. max od; insulated; Spec MIL-R-11A, MIL type RC20BF333J; Hazeltine Elec (contr) part 280-1015P127.	Cathode bias for V105B
R134		Same as R127.	Cut-off bias for V105B
R135 thru R150		Not used.	
R151		RESISTOR, FIXED, COMPOSITION: 6 meg, ±10%; 9 w power dissipation; 0.04% of total resistance per deg C between 20 and 130 deg C temp coefficient; 4-9/32 in. lg by 1-3/8 in. od; insulated; Sprague Elec (mfr) Meg-O-Max type 1; Hazeltine Elec (contr) part 280-1072P3.	Bleeder high voltage
R152	B	RESISTOR, FIXED, WIREWOUND: non inductive winding; 25 ohms, ±5%; 18 w; 275 deg C max continuous operating temp, 25 deg C ambient temp; 3 in. lg by 9/32 in. max od; coating not specified, resistant to humidity; 2 radial tab terminals 21/64 in. lg by 11/64 min to 21/64 in. max w; Spec MIL-R-26B, MIL type RW33G250; Hazeltine Elec (contr) part 280-1008P29.	Dropping
R153	B	RESISTOR, FIXED, COMPOSITION: 100 ohms, ±5%; 1 w; F characteristic; body 0.760 in. max lg by 0.264 in. max od; insulated; Spec MIL-R-11A, MIL type RC30BF101J; Hazeltine Elec (contr) part 280-1002P37.	Multiplier

TABLE 8-3. MAINTENANCE PARTS LIST — Cont'd.

REF. DESIG.	NOTES	NAME AND DESCRIPTION	LOCATING FUNCTION
R154	B	RESISTOR, FIXED, COMPOSITION: 680 ohms, ±5%; 1 w; F characteristic; body 0.760 in. max lg by 0.264 in. max od; insulated; Spec MIL-R-11A, MIL type RC30BF681J; Hazeltine Elec (contr) part 280-1002P67.	Dropping
R155		Same as R154.	Dropping
R156	B	RESISTOR, FIXED, WIREWOUND: noninductive winding; 800 ohms, ±5%; 116 w power dissipation 275 deg C max continuous operating temp, 25 deg C ambient temp; body 8-11/16 in. max long by 1-5/16 in. max od; resistant to humidity; two ferrule type terminals 1/2 in. lg by 1-1/8 in. dia; MIL-R-26B, MIL type RW11G801; Hazeltine Elec (contr) part 280-1034P59.	Current limiting for V155
R157		RESISTOR, FIXED, COMPOSITION: 10 meg ±10%; 10 w power dissapation; 0.04% of total resistance per deg C between 20 and 130 deg C temp coefficient; 4-9/32 in. lg by 1-3/8 in. od; insulated; Sprague Elec (mfr) Meg-O-Max type 1; Hazeltine Elec (contr) part 280-1072P2.	Voltage divider
R158		Same as R127.	Voltage divider for TP151 and TP152
R159		Same as R127.	Voltage divider for TP151 and TP152
R160	B	RESISTOR, FIXED, COMPOSITION: 3300 ohms, ±5%; 1 w; F characteristic; body 0.760 in. max lg by 0.264 in. max od; insulated; Spec MIL-R-11A, MIL type RC30BF332J; Hazeltine Elec (contr) part 280-1002P91.	Grid return for V156
R161		Not used.	
R162	B	RESISTOR, FIXED, COMPOSITION: 220 ohms, ±5%; 1 w; F characteristic; body 0.760 in. max lg by 0.264 in. max od; insulated; Spec MIL-R-11A, MIL type RC30BF221J; Hazeltine Elec (contr) part 280-1002P49.	Voltage divider
R163		Same as R162.	Voltage divider
R164		Same as R162.	Voltage divider
R165		Same as R162.	Voltage divider
R166		Same as R162.	Voltage divider
R167		RESISTOR, VARIABLE: composition element; 1 section, 250,000 ohms, ±10%; 2 w nom power rating; std A taper; metal case, enclosed, 1-3/32 in. dia by 21/32 in. deep; single shaft, 1/4 in. dia, 1 in. lg from mtg surface; Hazeltine Elec (mfr and contr) part 240-1044P7.	PRF control
R168		RESISTOR, VARIABLE: wirewound element; 1 section 500 ohms, ±10%; 2 w nom power rating; std A taper; metal case, enclosed; 1.28 in. dia by 0.62 in. deep; single shaft, 1/4 in. dia, 7/8 in. lg from mtg surface; Spec JAN-R-19 JAN type RA20A1SD501AK; Hazeltine Elec (contr) part 240-1008P16.	Relay balance for K151

TABLE 8-3. MAINTENANCE PARTS LIST — Cont'd.

REF. DESIG.	NOTES	NAME AND DESCRIPTION	LOCATING FUNCTION
R169		RESISTOR, FIXED, WIREWOUND: noninductive winding; 2500 ohms, ±5%; 50 w power dissipation, 275 deg C max continuous operating temp, 25 deg C ambient temp; body 4-3/16 in. max long by 1-1/16 in. max od; glass inclosure; resistant to salt water immersion; two ferrule type terminals 35/64 in. lg by 13/16 in. dia; Sprague Elec (mfr) type 50NIF; Hazeltine Elec (contr) part 280-1096P1.	Voltage divider
R170		Not used.	
R171		Same as R133.	Current limiting for I151
R172		Same as R133.	Current limiting for L152
R173		Same as R133.	Current limiting for I153
S101		SWITCH, TOGGLE: spst; 2 positions; electrical ratings per MIL Spec below; 1-1/16 in. lg by 41/64 in. w by 1-9/64 in. h over-all excluding bushing and handle; bat type actuator, 11/16 in. lg excluding lg of bushing; non-turn action w/tabbed washer; Spec MIL-S-3950, MIL type MS35058-9; Hazeltine Elec (contr) part 228-1001P1.	Delay selector
S102 thru S150		Not used.	
S151		SWITCH, PUSH: dpst; momentary action, normally open; 3-3/4 in. lg by 1-1/2 in. w by 3 in. h excluding terminals; lever type actuator; Hazeltine Elec (mfr and contr) part 228-1091G1.	Safety switch
S152		SWITCH, TOGGLE: dpdt; 3 positions, on, none, on; 1-21/64 in. lg by 49/64 in. w by 1-1/16 in. high over-all excluding bushing and handle; bat type handle, 11/16 in. lg excluding lg of bushing; locking action w/keyway; Spec MIL-S-3950, MIL type MS35059-15; Hazeltine Elec (contr) part 228-1002P4.	Synchronization switch
S153		SWITCH, PUSH: dpst; normally open; rated 12 amp at 125 v, 6 amp at 250 v; 1-7/8 in. lg by 13/16 in. w by 1-1/8 in. h excluding latch; latch type actuating handle, 1-1/16 in. lg; interlocking action w/manual latch; Cutler Hammer Inc (mfr) part 8909K128; Hazeltine Elec (contr) part 228-1003P1.	Interlock switch
S154		SWITCH, THERMOSTATIC: spst; contacts close on temp increase, 25 deg C to 40 deg C adjustable operating temp range; bimetal element; 8 amp 125 v ac, 10 amp 30 v dc; 1-1/64 in. lg by 0.345 in. w by 3/4 in. h over-all; Stevens Mfg (mfr) type M; Hazeltine Elec (contr) part 271-1091P3.	Blower thermostat for B151
S155		SWITCH, THERMOSTATIC: spst; contacts open on temp increase, 0 deg C to 15 deg C adjustable operating temp range; bimetal element; 8 amp 125 v ac, 10 amp 30 v dc; 1-1/64 in. lg by 0.345 in. w by 3/4 in. h over-all; Stevens Mfg (mfr) type M; Hazeltine Elec (contr) part 271-1091P2.	Heater thermostat for HR151 and HR152
S156		Same as S152.	On-Off for variac T155

TABLE 8-3. MAINTENANCE PARTS LIST — Cont'd.

REF. DESIG.	NOTES	NAME AND DESCRIPTION	LOCATING FUNCTION
T101		TRANSFORMER, POWER, STEP-DOWN: hermetically sealed metal case; primary 115 v, 400 cycles, single phase; secondary no. 1, 6.3 v, 2.0 amp, secondary no. 2, 6.3 v, 1.2 amp; air cooled; wax filled and impregnated, 2-7/16 in. lg by 2-7/16 in. w by 3-5/8 in. h excluding terminals and mtg studs; Hazeltine Elec (mfr and contr) part 292-1197G1.	Filament transformer trigger chassis
T102		TRANSFORMER, PULSE: blocking oscillator type; winding A, 2500 ohms impedance, 8.4 ohms dc resistance, windings B and C, 10,000 ohms impedance ea, winding B, 19 ohms dc resistance; winding C, 20 ohms dc resistance; winding A, 100 v, 0.04 amp peak, and B and C ea 200 v, 0.02 amp peak; insulation test voltage 1275 v rms; 2 in. lg by 1-11/16 in. w by 1-29/32 in. h, excluding terminals; Hazeltine Elec (mfr and contr) part 363-1060G1.	Blocking oscillator
T103		TRANSFORMER, PULSE: interstage type; primary 25 ohms max dc resistance, secondary 78.2 ohms max dc resistance; primary 150 v, secondary 240 v ±2%; insulation test voltage primary 1780 v rms, secondary 2500 v rms; 2-19/32 in. lg by 1-9/32 in. w by 2-11/32 in. h, excluding terminals; Hazeltine Elec (mfr and contr) part 363-1074G1.	Trigger transformer
T104		Not used.	
T105		TRANSFORMER, PULSE: blocking oscillator type; primary 12.47 ohms, secondary 3.42 ohms dc resistance; primary 250 v, one secondary winding 250 v, 1-1/2 in. lg by 1-1/2 in. w by 2 in. h, excluding terminals; Hazeltine Elec (mfr and contr) part TR-1248.	Blocking oscillator transformer for V105A
T106 thru T150		Not used.	
T151		TRANSFORMER, POWER, STEP-UP: hermetically sealed metal case; primary 115 v, 400 cycles, single phase w/2 taps; secondary 9100, 9600, 9900, 10,500 v center tapped, 0.330 amp, w/primary across terminals 1-4, 2-4, 1-3, 2-3 respectively; air cooled; oil filled; dim. 7-27/32 in. lg by 7-7/32 in. w by 9-1/8 in. h excluding terminals and mtg studs; Hazeltine Elec (mfr and contr) part 292-1262G1.	High voltage plate supply
T152		TRANSFORMER, POWER, STEP-DOWN: hermetically sealed metal case; primary 115 v ±10%, 400 cycles, single phase, 2.13 amp, 1780 v rms test; secondary no. 1, 5.0 v, 20 amp, 6000 v max operating above ground, 9500 v rms test, secondary no. 2, 5.0 v, 25 amp, 10,000 v max operating above ground, 15,000 v rms test; air cooled; oil filled; dim.; 4-1/16 in. lg by 3-9/16 in. w by 4-9/16 in. h excluding terminals and mtg studs; Hazeltine Elec (mfr and contr) part 292-1198G1.	Rectifier filament
T153	B	TRANSFORMER, POWER, STEP-DOWN: hermetically sealed metal case; 75 va, primary 115 v, 400 cycles, single phase, 1.22 amp, 0.78 ohm dc resistance, 1780 v rms test; secondary 6.3 v, 10 amp, zero v operating above ground, 1780 v rms test; air cooled, wax filled, varnish impregnated; dim.; 3-3/16 in. lg by 2-3/4 in. w by 3-7/16 in. h excluding terminals and mtg studs; Hazeltine Elec (mfr and contr) part TR1564.	Thyratron filament supply
T154		Not used.	

TABLE 8-3. MAINTENANCE PARTS LIST — Cont'd.

REF. DESIG.	NOTES	NAME AND DESCRIPTION	LOCATING FUNCTION
T155		TRANSFORMER, VARIABLE, POWER: input 115 v, 350 to 1200 cycles, single phase; output 0 to 115 v, 0 to 135 v range, rated current 10 amp, max current 13 amp, 1.5 kva; 5-3/4 in. w by 5-3/4 in. h by 4-3/8 in. deep, excluding terminals; less dial and knob; General Radio (mfr) part M-10-10; Hazeltine Elec (contr) part TR-1551.	Aging variac
TB101	C	TERMINAL BOARD: nylon base phenolic board; incl 35 stud terminals; w/o barriers; 10-1/4 in. lg by 2-3/8 in. w by 3/8 in. h, excluding terminals; Hazeltine Elec (mfr and contr) part/dwg A-18884.	Mounts 23 fixed resistors and 3 fixed capacitors
TB102	C	TERMINAL BOARD: nylon base phenolic board; incl 2 stud terminals; 3-3/8 in. lg by 1/2 in. w by 1/8 in. thk, excluding terminals; Hazeltine Elec (mfr and contr) part/dwg A-18851.	Mounts R160
TB103	C	TERMINAL BOARD: nylon base phenolic board; incl 10 stud terminals; 3-3/8 in. lg by 1-3/4 in. w by 1/8 in. thk excluding terminals; Hazeltine Elec (mfr and contr) part 1587-1073G1.	Mounts R162 through R166
TB104	C	TERMINAL BOARD: nylon base phenolic board; incl 10 stud terminals; 16-5/8 in. lg by 6-13/16 in. w by 1/4 in. thk, excluding terminals; Hazeltine Elec (mfr and contr) part 1587-1023G1.	Mounts R151 through R159
TB105	C	TERMINAL BOARD: phenolic board; incl 2 stud terminals; 1-1/4 in. lg by 1/2 in. w by 3/32 in. thk, excluding terminals and bracket; Hazeltine Elec (mfr and contr) part 1587-1080G1.	For R171
TB106	C	TERMINAL BOARD: phenolic board; incl 2 stud terminals; 1-1/4 in. lg by 1/2 in. w by 3/32 in. thk, excluding terminals and bracket; Hazeltine Elec (mfr and contr) part 1587-1080G2.	For R172
TB107	C	TERMINAL BOARD: phenolic board; incl 2 stud terminals; 1-1/4 in. lg by 1/2 in. w by 3/32 in. thk, excluding terminals and bracket; Hazeltine Elec (mfr and contr) part 1587-1080G3.	For R173
TB108	C	TERMINAL BOARD: nylon base phenolic board; incl 19 stud terminals and one capacitor mtg clip; w/o barriers; 6 in. lg by 1-15/16 in. w by 3/8 in. h, excluding terminals; Hazeltine Elec (mfr and contr) part/dwg A-18790.	General purpose
TP101		JACK, TIP: 1 contact; 1 connector mating end; 1 female contact; red nylon insulation, type FM-10001; straight shape; 3/4 in. lg by 3/8 in. dia excluding protruding terminal; resistant to corrosion; 0.080 in. dia max size test prod accommodated; single through hole mtg, 1/4-28 NF-2 thd, incl 1/4-28 NF-2 hexagon mtg nut; Diamond Mfg Co (mfr) part A-10001-1; Hazeltine Elec (contr) part 276-1137G2.	Test point multivibrator plate
TP102		Same as TP101.	Trigger tube grid for V102
TP103		Same as TP101.	Blocking oscillator output for V103
TP104		Same as TP101.	Output of V103
TP105		Not used.	
TP106		Same as TP101.	Cathode of V106A
TP107		Same as TP101.	Plate of V106A

TABLE 8-3. MAINTENANCE PARTS LIST — Cont'd.

REF. DESIG.	NOTES	NAME AND DESCRIPTION	LOCATING FUNCTION
TP108 thru TP150		Not used.	
TP151		Same as TP101.	Point charging voltage
TP152		CONNECTOR, RECEPTACLE, ELECTRICAL: 1 contact; 1 connector mating end; 1 female contact; black nylon insulation, type FM-10001; straight shape; 3/4 in. lg by 3/8 in. dia excluding protruding terminal; resistant to corrosion; 0.080 in. dia max size test prod accommodated; single through hole mtg, 1/4-28 NF-2 thd, incl 1/4-28 NF-2 hexagon mtg nut; Diamond Mfg Co (mfr) part A-10002-1; Hazeltine Elec (contr) part 276-1137G1.	Test point ground
V101		ELECTRON TUBE: glass envelope; ruggedized twin triode medium-mu amplifier; MIL-E-1C; MIL type 6SN7WGT; Hazeltine Elec (contr) part 6SN7WGT.	Multivibrator
V102		Same as V101.	Trigger tube and blocking oscillator
V103		ELECTRON TUBE: metal envelope; power pentode; Spec MIL-E-1C; MIL type 6AG7; Hazeltine Elec (contr) part 6AG7.	Cathode follower
V104		Not used.	
V105		ELECTRON TUBE: glass envelope; medium-mu twin diode; Spec MIL-E-1C; MIL type 5814A; Hazeltine Elec (contr) part 5814A.	Consists of V105A and V105B
V105A	E	Part of V105; for reference only.	IFF Pre-trigger block oscillator
V105B	E	Part of V105; for reference only.	Trigger amplifier
V106		ELECTRON TUBE: glass envelope; twin diode; Spec MIL-E-1C; MIL type 5726; Hazeltine Elec (contr) part 5726.	Consists of V106A and V106B
V106A	E	Part of V106; for reference only.	Coupling diode
V106B	E	Part of V106; for reference only.	Termination diode for DL101
V107 thru V150		Not used.	
V151		ELECTRON TUBE: glass envelope; high vacuum half-wave rectifier; Spec MIL-E-1C; MIL type 371B; Hazeltine Elec (contr) part 371B.	High voltage rectifier
V152		Same as V151.	High voltage rectifier
V153		Same as V151.	Charging diode
V154		Same as V151.	Charging diode
V155		ELECTRON TUBE: glass envelope; high vacuum clipper diode; Spec MIL-E-1C; MIL type 4B31; Hazeltine Elec (contr) part 4B31.	Shunt diode

TABLE 8-3. MAINTENANCE PARTS LIST — Cont'd.

REF. DESIG.	NOTES	NAME AND DESCRIPTION	LOCATING FUNCTION
V156		ELECTRON TUBE: glass envelope; hydrogen thyratron; Spec MIL-E-1C; MIL type 5C22/HT-415; Hazeltine Elec (contr) part 290-1065P1.	Switch tube
V157		Not used.	
W101	C	BUS BAR: half hard yellow brass, cadmium plated; rectangular shape w/2 rounded ends; 1-5/16 in. lg by 1/2 in. w by 0.078 in. thk over-all; Hazeltine Elec (mfr and contr) part 1587-1062P1.	For XV156 and XV157
W102		Not used.	
W103	C	BUS BAR: half hard yellow brass, cadmium plated; irregular "U" shape w/rd hole in one end, oval hole opposite end; 4-1/16 in. lg by 0.737 in. w by 1/4 in. h over-all; Hazeltine Elec (mfr and contr) part 1587-1025P1.	For XV151, XV152, XV153 and XV154
XI101 thru XI150		Not used.	
XI151		LAMPHOLDER: brass, nickel plated body, molded phenolic insulation; accommodates double contact bayonet candelabra base lamp; 1-13/16 in. lg by 1-3/16 in. w by 1-1/2 in. h over-all; Hazeltine Elec (mfr and contr) part 281-1015P1.	For I151
XI152		Same as XI151.	For I152
XI153		Same as XI151.	For I153
XV101		SOCKET, ELECTRON TUBE: type octal pin contact configuration; no contacts missing; molded low loss composition body; body accommodation hole required, rd shaped plain, 31/32 in. lg by 1-7/8 in. w over-all; two 0.156 in. dia mtg holes spaced 1-1/2 in. c to c; provisions for mtg electron tube shield not provided, force fit type; electron tube shield retaining devices not incl; Hazeltine Elec (mfr and contr) part 282-1003P2.	For V101
XV102		Same as XV101.	For V102
XV103		Same as XV101.	For V103
XV104		Not used.	
XV105		SOCKET, ELECTRON TUBE: type E noval pin contact configuration; no contacts missing; molded construction body, low loss composition; rd shaped plain body accommodation hole required, 1-3/16 in. h by 1-3/8 in. w over-all two 1/8 in. dia mtg holes spaced 1-1/8 in. c to c; provisions for mtg electron tube shield are provided, bayonet type; electron tube retaining device not incl; Spec JAN-S-28A, JAN type TS103P01; Hazeltine Elec (contr) part 282-1002P2.	For V105
XV106	B	SOCKET, ELECTRON TUBE: type E miniature 7 pin contact configuration; no contacts missing; molded construction body, low loss composition; rd shaped plain body accommodation hole required, 1-3/16 in. h by 1-1/8 in. w over-all, two 1/8 in. dia mtg holes space 7/8 in. c to c; provisions for mtg electron tube shield provided, bayonet type; electron tube retaining device not incl; Spec JAN-S-28A, JAN type TS102P01; Hazeltine Elec (contr) part TS102P01.	For V106

TABLE 8-3. MAINTENANCE PARTS LIST — Cont'd.

REF. DESIG.	NOTES	NAME AND DESCRIPTION	LOCATING FUNCTION
XV107 thru XV150		Not used.	
XV151		SOCKET, ELECTRON TUBE: 4 pin contact configuration; no contacts missing; molded construction body, ceramic, glazed; rd shaped plain, 2-9/32 in. lg by 3-3/8 in. dia over-all, two 7/32 in. dia mtg holes spaced 2-13/16 in. c to c; clip type; E. F. Johnson (mfr) part 123-211SB; Hazeltine Elec (contr) part 282-1018P1.	For V151
XV152		Same as XV151.	For V152
XV153		Same as XV151.	For V153
XV154		Same as XV151.	For V154
XV155		SOCKET, ELECTRON TUBE: 4 pin contact configuration; no contacts missing; molded construction body, ceramic, glazed body; rectangular shaped plain; 2-5/8 in. lg by 2-5/8 in. w by 11/16 in. h over-all; four 0.175 in. dia mtg holes on 1-7/8 in. mtg centers; clip type; E. F. Johnson (mfr) part 122-244-3; Hazeltine Elec (contr) part 282-1017P1.	For V155
XV156		Same as XV155.	For V156
Z101		DELAY LINE: electromagnetic type; 12.3 usec time delay w/term 2 and 3 shorted, 36.7 usec time delay w/term 3 and 4 shorted; 400 pulse repetition frequency; hermetically sealed metal case; 6 in. lg by 4-1/2 in. w by 1-3/8 in. h over-all; 4 terminals; mtg holes spaced on on 4 in. by 3-1/2 in. c to c; Hazeltine Elec (mfr and contr) part/dwg DL-1046.	Pulse delay
Z102 thru Z150		Not used.	
Z151		FILTER, RADIO INTERFERENCE: 1 inductance; 130 v, 27 amp rms, 400 cycles; hermetically sealed metal case; 2-3/8 in. lg by 1-1/4 in. w by 2-1/16 in. h over-all; Astron Corp (mfr) type AF227; Hazeltine Elec (contr) part 363-1056P1.	Suppressor electrical noise
Z152		Same as Z151.	Noise suppressor
Z153		SUPPRESSOR, ELECTRICAL NOISE: capacitor and coil type; 7 amp ac or dc, 500 v dc, 130 v ac, 0 to 1700 cps; hermetically sealed; 2 in. lg by 2 in. w by 1-1/8 in. h, excl terminals and mtg ears; Sprague (mfr) type JX71B; Hazeltine Elec (contr) part 363-1037P1.	Electrical noise suppressor
Z154		Same as Z153.	Noise suppressor
Z155		Same as Z153.	Noise suppressor
Z156		Same as Z153.	Noise suppressor
Z157		Same as Z153.	Noise suppressor
Z158		Same as Z153.	Noise suppressor
Z159		Same as Z153.	Noise suppressor
Z160		Not used.	
Z161		NETWORK, PULSE FORMING: steel; pulse duration 2.0 usec ±5% at 67% of peak amplitude; 16 ohms impedance; 11.5 kv max charging voltage; 400 pulses per sec max repetition rate; 4 section type E network; 10 in. lg by 5-1/4 in. w by 10 in. h excl term; 2 term; choke side term marked; Tobe Deutschmann (mfr) RPN-5; Hazeltine Elec (contr) part 363-1035P1.	Pulse forming network

TABLE 8-3. MAINTENANCE PARTS LIST — Cont'd.

REF. DESIG.	NOTES	NAME AND DESCRIPTION	LOCATING FUNCTION
201-299 501-599 Series	E	RECEIVER-TRANSMITTER, RADAR: Army-Navy Radar, Receiver-Transmitter RT-212A/TPS-1D; Hazeltine Elec (mfr and contr) part/dwg A-18926; Navy Spec MIL-R-0015895(SHIPS) and Amendment 2.	
A201 thru A220		Not used.	
A221	E	COVER, AMPLIFIER: rectangular; approx 10-11/64 in. lg by 2-13/32 in. w by 1-27/64 in. h, excluding bushings; 2 integral mtg bushings w/no. 10-32 holes on 9-5/16 in. mtg centers; Hazeltine Elec (mfr and contr) part 744320G501.	For intermediate frequency preamplifier
A501		MOUNT, RESILIENT: square mtg; 50-144 lb load rating; 3 in. lg by 3 in. w by 1-1/2 in. h over-all; synthetic rubber cushion, compression cup type; 2-7/8 in. dia by 3/4 in. thk; steel center sleeve w/3/8 in.-16 center holes; 4 mtg holes 0.266 in. dia on 2-1/2 in. by 2-1/2 in. mtg centers; Barry Corp (mfr) type 7235-F; Hazeltine Elec (contr) part 344-1009P6; (same as A102).	Inner case shock mounts
A502	F	BRACKET, SWITCH: aluminum, anodized; U shape; 1-9/16 in. lg by 3/8 in. w by 11/32 in. h over-all; 2 mtg holes 0.169 in. dia on 1-3/16 mtg centers; 1 hole 5/32 in. dia center; Hazeltine Elec (mfr and contr) part 1592-1079P1; (same as A112).	Mounting for S505
A503	F	PLATE, MOUNTING, CAPACITOR: stainless steel, passivated; J shape; approx 2-15/32 in. lg by 25/32 in. w by 7/16 in. h over-all; mtg lug no. 10-24 by 9/16 in. lg; Hazeltine Elec (mfr and contr) part 1588-1108G1.	Mounting for C509
A504	F	BRACKET, ANGLE: steel, cadmium plated; L shape w/hook 5/32 in. lg at top; 1-5/16 in. lg by 9/16 in. w by approx 0.606 in. deep; mtg foot w/mtg slot 0.234 in. lg by 0.187 in. w; Hazeltine Elec (mfr and contr) part 217-1022P1; (same as A104).	Mounting for R507, R515, R517, R518 and R519
A505	F	BRACKET, ANGLE: resistor mtg; 0.050 in. thk steel, cadmium plated; L shape w/hook 5/32 in. lg at top; 1-11/16 in. lg by 3/4 in. w by approx 0.731 in. deep; mtg foot w/mtg slot 0.234 in. by 0.187 in. w; Hazeltine Elec (mfr and contr) part 217-1022P2; (same as A410).	Mounting for R516
A506	F	PLATE, MOUNTING: support for numerical dial; aluminum, black anodized; irregular shape; 1-13/16 in. lg by 1-1/4 in. w by 1/4 in. thk over-all; 2 countersunk mtg holes no. 4-40 NC-2 on 1.158 in. max mtg centers; Hazeltine Elec (mfr and contr) part 1588-1070P1.	Support for N501
A507	F	PLATE, MOUNTING: for dial; aluminum, black anodized; irregular shape; 3-1/32 in. lg by 1-7/8 in. w by 1/16 in. thk over-all; 2 countersunk mtg holes 0.121 in. dia on 1.158 max mtg centers; includes 0.147 in. dia and 0.3755 in. dia holes; Hazeltine Elec (mfr and contr) part 1588-1064P1.	For N501
A508 thru A511		Not used.	
A512	F	BRACKET, SWITCH: aluminum, gray enamel finish; irregular shape; approx 3-5/16 in. lg by 2-3/16 in. w by 11/16 in. deep; 2 mtg holes no. 6-32 NC-2 on 2-13/16 in. mtg centers; includes 4 holes 9/32 in. dia equally spaced on 2-3/16 in. dia circle; Hazeltine Elec (mfr and contr) part 1588-1126G1.	Mounting for S501

TABLE 8-3. MAINTENANCE PARTS LIST — Cont'd.

REF. DESIG.	NOTES	NAME AND DESCRIPTION	LOCATING FUNCTION
A513		Not used.	
A514	E	CASE, POWER SUPPLY: aluminum, anodized, painted USMC green; rectangular; approx 28-1/2 in. lg by 24 in. w by 1-1/4 in. deep over-all; 26 mtg holes 1/4 in. -20 and 2 mtg holes 0.386 in. dia symmetrically spaced around edges; Hazeltine Elec (mfr and contr) part 1620-1011G1; (same as A116).	Unit outer case
A515		CABINET, ELECTRICAL EQUIPMENT: aluminum; 24-1/4 in. lg by 24 in. w by 32 in. h over-all; incl several channels and lg tubes of aluminum soldered to sides; incl four flush folding type handles located 2 ea side and pressure relief valve; Hazeltine Elec (mfr and contr) part A-18869G3.	Unit outer case
A516	C	CAVITY, TUNED: 1220 to 1350 mc frequency range; hydraulic bronze cast enclosure; manually tuned; Hazeltine Elec (mfr and contr) part 1588-5034G1.	To lower power on transmitter receiver
A517		CAVITY, TUNED: 1220 to 1350 mc frequency range; hydraulic bronze cast enclosure; manually tuned; Hazeltine Elec (mfr and contr) part 1588-5035G1.	To protect CR502 and CR503
A518	F	RETAINER, CAPACITOR: 0.078 in. thk aluminum, gray enamel finish; irregular shape; 4-3/32 in. lg by 2-7/8 in. w by 1-1/64 in. h over-all; 2 mtg holes 0.169 in. dia on 2-1/2 in. mtg centers; Hazeltine Elec (mfr and contr) part 1587-1028G1.	Mounting for C512
A519	C	MOUNTING: aluminum; alodine finish; irregular shape; 13-1/2 in. lg by 9 in. w by 12-19/32 in. h; mounts by six 5/8 in. dia holes, 3 ea end, spaced on 2-15/16 in. centers; Hazeltine Elec (mfr and contr) part/dwg 1588-1029G1.	RF mount
A520	F	BRACKET, MOUNTING: 0.080 in. thk aluminum, gray enamel finish; irregular shape; approx 10-9/16 in. lg by 10-1/16 in. w by 3-1/2 in. deep; 11 mtg holes 0.221 in. dia irregularly spaced around edges; marked B501; includes 1 centering hole 5.0 in. dia encircled by 6 holes 0.218 in. dia spaced 60 deg apart on 5.562 in. dia circle; Hazeltine Elec (mfr and contr) part 1588-1038G1.	Mounting for B501
A521	F	BRACKET: aluminum, gray enamel finish; irregular shape; 5-21/32 in. lg by approx 3-11/32 in. w by 2-33/64 in. h over-all; 4 mtg inserts no. 10-24 NC-2 on 5-21/32 in. by 2-25/32 in. mtg centers; Hazeltine Elec (mfr and contr) part 1587-1021G2.	Support for C512
A522	F	BRACKET, DOUBLE ANGLE: rectangular shape; 0.122 in. aluminum, gray enamel finish; 7-11/16 in. lg by 1-3/4 in. w over-all; 4 mtg holes 0.169 in. dia on 7-3/16 in. by 1-1/4 in. mtg centers; Hazeltine Elec (mfr and contr) part 1588-1041P1.	Part of mounting for R509
A523		Not used.	
A524	F	BRACKET, DOUBLE ANGLE: elongated "U" shape; 0.078 in. thk; brass, cadmium plated; 4-19/32 in. lg by 1-1/4 in. w by 1 in. h over-all; 4 mtg holes 0.169 in. dia on 3-3/4 in. by 5/8 in. mtg centers; includes 2 holes 0.209 in. dia, 1 ea end on arms; Hazeltine Elec (mfr and contr) part 1588-1011P1.	Mounting bracket for plunger

TABLE 8-3. MAINTENANCE PARTS LIST — Cont'd.

REF. DESIG.	NOTES	NAME AND DESCRIPTION	LOCATING FUNCTION
A525	F	BRACKET, SWITCH: 0.080 in. thk aluminum, gray enamel finish; irregular shape; 3 in. lg by 1-1/4 in. w by 1 in. h; 2 mtg holes 0.196 in. dia on 2-3/8 in. mtg centers; includes T slot 2-1/4 in. lg by 1/2 in. w and 4 holes 0.144 in. dia on 3/4 in. by 5/8 in. centers; Hazeltine Elec (mfr and contr) part 1588-1043P1.	Mounting for S504
A526	F	BRACKET, ANGLE: 0.122 in. thk aluminum, gray enamel finish; rectangular; 3-1/8 in. lg by 2-1/4 in. w by 1-5/32 in. h over-all; 2 mtg holes 0.169 in. dia on 1-1/2 in. mtg centers; includes 1 hole 13/16 in. dia, 3 holes 0.169 in. dia, 1 hole 0.169 in. dia countersunk 82 deg to 9/32 in. dia; Hazeltine Elec (mfr and contr) part 1588-1059P1.	Bracket for XTY501
A527	F	BRACKET, TEE: for coho mixer assembly; irregular shape; hydraulic bronze, lacquer USMC green; 3-1/8 in. lg by 1-1/2 in. w by 1-1/2 in. h over-all; 4 mtg holes 0.221 in. dia spotfaced 3/8 in. dia on 2-1/2 in. by 7/8 in. mtg centers; includes 2 slots 1/2 in. lg by 9/32 in. w spaced 3/4 in. c to c; Hazeltine Elec (mfr and contr) part 1588-1080P1.	Bracket for RF502
A528	F	COVER: aluminum, painted USMC green; 11-1/2 in. lg by 11-1/2 in. w by approx 1-9/16 in. deep; 8 mtg inserts w/countersunk no. 10-24 NC-2 holes equally spaced around edge; Hazeltine Elec (mfr and contr) part 1587-1048G2.	Filter cover
A529		PLATE, MOUNTING, CAPACITOR: material and finish per MIL-C-25A; spade type; 4 in. lg by 1-15/32 in. w by 0.045 in. thk, excluding mtg studs; 2 mtg studs no. 10-32 by 5/8 in. min lg on 5/8 in. mtg centers; Spec MIL-C-25A, type CP07SD3; Hazeltine Elec (mfr and contr) part 217-1012P3; (same as A408).	Secures C522
A530	F	BRACKET, DOUBLE ANGLE: 0.125 in. thk aluminum; irregular shape; 4-1/8 in. lg by 3-3/8 in. w by 2-7/8 in. h over-all; 4 mtg inserts w/ no. 6-32 NC-2 holes on 3-11/16 in. by 2-3/8 mtg centers; marked "L504"; Hazeltine Elec (mfr and contr) part 1588-1252G1.	Mounting for L504
A531	C	ARM: actuates switch; c/o 1 ea Hazeltine part 1588-1321P1 crank and part 293-1007P4 Dowel Pin; gun metal; bright alloy plate crank; stainless steel, passivated dowel pin; irregular shape; approx 1-7/8 in. lg by 15/16 in. w by 9/16 in. h over-all; shaft mounted by hole 0.187 in. dia located at end of 1/16 in. w slot; includes no. 6-32 NC-2 bottom tapped hole 0.147 in. dia, spotfaced 5/16 in. dia, hole 0.1247 in. max dia, dowel pin protrudes 5/16 in. from side; Hazeltine Elec (mfr and contr) part 1588-1321G1.	For S502 and S503
A532	F	BRACKET, MOTOR: 0.050 in. thk stainless steel, passivated; irregular shape; 3 in. lg by 2-3/8 in. w by 1-5/16 in. h over-all; 3 mtg slots 0.285 in. lg by 0.154 in. w on 1-23/32 in. by 1-15/32 in. mtg centers; marked R518, R519, B502, C519, C520; includes 4 holes 0.144 in. dia, 1 hole 1-1/2 in. dia, 2 holes 0.125 in. dia, 4 holes 0.196 in. dia, and 4 threaded inserts; Hazeltine Elec (mfr and contr) part 1588-1312G1.	Mounting for B502
A533		MOUNT, RESILIENT: diamond mtg; 2 lb load rating; 1-3/4 in. lg by 1-1/4 in. w by 23/32 in. h over-all; natural rubber cushion, approx 1 in. dia by 21/32 in. h; steel center sleeve w/0.166 in. dia bolt hole; 2 mtg holes 0.141 in. dia on 1-13/32 in. mtg centers; The Barry Corp (mfr) type 6300-2; Hazeltine Elec (contr) part 344-1019P2.	Shock mount for Z511

TABLE 8-3. MAINTENANCE PARTS LIST — Cont'd.

REF. DESIG.	NOTES	NAME AND DESCRIPTION	LOCATING FUNCTION
A534 and A535		Not used.	
B501		FAN, CENTRIFUGAL: propeller blade; electric motor operated; four aluminum blades, 4-15/16 in. dia; non-portable; guarded; motor 1/15 hp, 7400 to 7500 rpm, 400 cycle, single phase, 105 to 125 v ac; 6-1/16 in. dia by 5-15/16 in. lg; 240 cfm in free air at 7400 to 7500 rpm; single speed; direct drive; 1.5 μf capacitor required, not furnished; L. J. Wing (mfr) part P/N-17654; Hazeltine Elec (contr) part 315-1026P1; (same as B151).	Magnetron cooling
B502		MOTOR, DIRECT CURRENT: shunt wound gear-motor type; 6 v dc, 0.2 amp; 1/2000 hp, single take-off, rotor speed 281 rpm, output speed 1 rpm, ccw rotation; ambient temp 0 deg C to +75 deg C; intermittant operation, 5.0 min max time on at 10% duty cycle; 2-29/64 in. lg excluding shaft by 1-41/64 in. dia, 5/16 in. dia shaft; Hansen Mfg Co (mfr) type 6V-7100F; Hazeltine Elec (contr) part 1589-1001P2.	Local oscillator tuning
C201 thru C221		Not used.	
C222		CAPACITOR, FIXED, CERAMIC DIELECTRIC: 500 v dc working, 1500 μμf, ±20%, variable temp coef; uninsulated body, 7/32 in. w across flats by 5/8 in. lg over-all; Central Radio Lab (mfr) type DA790; Hazeltine Elec (contr) part 235-1020P8.	Receiver crystal current by-pass
C223		Same as C222.	Receiver crystal current by-pass
C224		Same as C222.	Receiver crystal current by-pass
C225		Same as C222.	Cathode bias by-pass for V222
C226		Same as C222.	Heater by-pass for V223
C227		Same as C222.	Plate voltage by-pass for V222
C228	B	CAPACITOR, FIXED, MICA DIELECTRIC: 500 v dc working, 1000 v peak working, 470 μμf, ±10%; molded phenolic case, case 47/64 in. w by 7/16 in. h by 3/16 in. deep; Spec MIL-C-5A, MIL type CM20B471K; Hazeltine Elec (contr) part 235-1005P80; (same as C111).	Cathode by-pass for V223
C229		Same as C222.	By-pass for plate supply of V223
C230		Same as C228.	Coupling V223 to V224
C231		Same as C222.	Cathode bias by-pass for V224
C232		Same as C222.	Plate and screen voltage by-pass for V224 and V225

TABLE 8-3. MAINTENANCE PARTS LIST — Cont'd.

REF. DESIG.	NOTES	NAME AND DESCRIPTION	LOCATING FUNCTION
C233		Same as C222.	Heater by-pass for V224
C234		Same as C222.	Screen by-pass for V224
C235		Same as C230.	Coupling plate of V224 to grid of V225
C236		Same as C222.	Cathode bias by-pass for V225
C237		Same as C222.	Heater by-pass for V225
C238		Same as C222.	Heater by-pass for V222
C239		Same as C230.	Coupling from plate of V222 to cathode of V223
C240		CAPACITOR, VARIABLE, CERAMIC DIELECTRIC: rotary type, 500 μμf per μf per deg C neg temp coef; single section, 7.0 μμf min, 45.0 μμf max, 500 v dc working; 27/32 in. lg by 41/64 in. w by 13/32 in. h; Spec MIL-C-81A, type CV11C450; Hazeltine Elec (contr) part 235-1014P3.	Tuning of secondary of T223
C501	B	CAPACITOR, FIXED, PAPER DIELECTRIC: 1500 v dc working, 0.1 μf, ±20%, 0.08 μf to 0.12 μf capacity range; metal case, insulated, hermetically sealed; case 1-1/4 in. dia by 2-5/16 in. lg, two axial wire lead terminals, 0.040 in. dia by 1-1/2 in. lg; Spec MIL-C-25A, MIL type CP26A1EH104M; Hazeltine Elec (contr) part 235-1148P4.	High voltage filter, T501
C502		Same as C501.	Filter
C503		CAPACITOR, FIXED, ELECTROLYTIC: 50 v dc working; 750 μf, +150 -10%; 45 μf to 125 μf capacity range; metal case, insulated, hermetically sealed; case 1-3/8 in. dia by 4-1/4 in. lg, two solder lug terminals, 7/16 in. lg; JAN-C-62, type CE41C751G; Hazeltine Elec (contr) part 235-1046P24.	Local oscillator filament filter
C504	B	CAPACITOR, FIXED, MICA DIELECTRIC: 1200 v dc working, 2400 v peak working, 10,000 μμf, ±10%; molded phenolic case; case 51/64 in. w by 51/64 in. h by 5/16 in. deep; Spec MIL-C-5A, MIL type CM50B103K; Hazeltine Elec (contr) part 235-1017P9.	Voltage equalizer for V502
C505		Same as C504.	Voltage equalizer
C506		Same as C504.	Magnetron bias for V502
C507		CAPACITOR, FIXED, PAPER DIELECTRIC: 600 v dc working, 1μf, +20 -10%, 0.9 μf to 1.2 μf capacity range; metal case, uninsulated, hermetically sealed; case 2 in. deep by 1-1/8 in. h by 2 in. w; Spec MIL-C-25A, MIL type CP53B4EF105V; Hazeltine Elec (contr) part 235-1002P27.	Consists of C507A and C507B, voltage equalizer and magnetron bias
C507A		Part of C507; for reference only.	Magnetron bias for V502
C507B		Part of C507; for reference only.	Magnetron bias for V502

TABLE 8-3. MAINTENANCE PARTS LIST — Cont'd.

REF. DESIG.	NOTES	NAME AND DESCRIPTION	LOCATING FUNCTION
C508		Same as C503.	Magnetron filament filter
C509		CAPACITOR, FIXED, PAPER DIELECTRIC: 6000 v dc working; 5000 μμf, ±10%, 4500 μμf to 5500 μμf capacity range; metal case, hermetically sealed, 2-1/2 in. lg by 1-3/16 in. w by 2 in. h; Sprague Elec (mfr) type 14772; Hazeltine Elec (contr) part 1588-1002P1.	Despiking resistor
C510	B	CAPACITOR, FIXED, MICA DIELECTRIC: 500 v dc working, 1000 v peak working, 5600 μμf, +10%; molded phenolic case; case 51/64 in. w by 51/64 in. h by 5/16 in. deep; Spec MIL-C-5A, MIL type CM35B562K; Hazeltine Elec (contr) part 235-1008P63.	By-pass capacitor for M502
C511		Same as C510.	By-pass for M501
C512		CAPACITOR, FIXED, PAPER DIELECTRIC: 300 v ac working; 1.5 μf, +10 -5%, 1.425 μf to 1.65 μf capacity range; metal case, hermetically sealed; 1-13/16 in. lg by 1-1/16 in. w by 3-7/8 in. h; Sprague Elec Co (mfr) type P-15679; Hazeltine Elec (contr) part 235-1067P1.	Blower motor phase shift, B501
C513		CAPACITOR, FIXED, PAPER DIELECTRIC: 200 v dc working, 130 v ac working, 20 amp; 250,000 μμf, +20 -10%, 225,000 μμf to 300,000 μμf capacity range; metal case hermetically sealed; 1-13/16 in. lg by 3/4 in. dia; Sprague Elec (mfr) type 6445 mod; Hazeltine Elec (contr) part 235-1039P3.	Suppressor, electrical noise
C514		Same as C513.	Suppressor, electrical noise
C515		Same as C513.	Suppressor, electrical noise
C516		CAPACITOR, FIXED, PAPER DIELECTRIC: 600 v dc working, 250 v ac working 60 cycle, 115 v 1750 cycle, 20 amp; 100,000 μμf, +20 -10%; 90,000 μμf to 120,000 μμf capacity range; metal case, hermetically sealed; 1-13/16 in. lg by 11/16 in. dia; Sprague Elec (mfr) type 80P3 modified; Hazeltine Elec (contr) part 235-1076P3.	Suppressor, electrical noise
C517		Same as C516.	Suppressor, electrical noise
C518		CAPACITOR, FIXED, CERAMIC DIELECTRIC: 1000 v dc working, 75 μμf, ±10%; 750 μμf per μf per deg C reg temp coef, +120 μμf per μf per deg C tolerance; uninsulated body, 5/16 in. w across flats by 5/8 in. lg over-all; Erie Resistor Corp (mfr) type 357; Hazeltine Elec (contr) part 235-1073P2.	Suppressor, electrical noise
C519		Same as C222.	Suppressor, electrical noise
C520		Same as C222.	Suppressor, electrical noise
C521		Not used.	
C522	B	CAPACITOR, FIXED, PAPER DIELECTRIC: 600 v dc working, 10 μf, +20 -10%, 9 μf to 12 μf capacity range; metal case, uninsulated, hermetically sealed; case 3-3/4 in. deep by 4 in. h by 1-3/4 in. w, 2 in. terminal centers, terminals 1-3/8 in. h; Spec MIL-C-25A, MIL type CP70E1EF160V; Hazeltine Elec (contr) part 235-1004P30; (same as C405).	Local oscillator filter

TABLE 8-3. MAINTENANCE PARTS LIST — Cont'd.

REF. DESIG.	NOTES	NAME AND DESCRIPTION	LOCATING FUNCTION
C523		CAPACITOR, FIXED, PAPER DIELECTRIC: 600 v dc working; 0.5 μf, +20 -10%; uninsulated; Spec MIL-C-25A, MIL type CP54B1FF504V; Hazeltine Elec (contr) part 235-1003P20.	Arc suppressor
C524		Same as C510.	RF by-pass for R514
C525		Not used.	
C526		Same as C222.	V506 grid decoupling
C527		CAPACITOR, FIXED, CERAMIC DIELECTRIC: 500 v dc working, 470 μμf, ±20%; uninsulated; Central Radio Laboratory (mfr) type DA790; Hazeltine Elec (contr) part 235-1020P5; (same as C307).	V506 cathode by-pass
C528		Same as C222.	V506 screen grid by-pass
C529		Same as C222.	V506 heater by-pass
C530		Same as C230.	V506 plate coupling
C531		CAPACITOR, FIXED, MICA DIELECTRIC: 300 v dc working, 600 v peak working; 0.015 mf ±5%; Hazeltine Elec (mfr and contr) part 1588-1327P1.	V505 plate by-pass
C532		CAPACITOR, FIXED, CERAMIC DIELECTRIC: 500 v dc working, 4700 μf, ±20%; uninsulated; Central Radio Laboratory (mfr) type DA791; Hazeltine Elec (contr) part 235-1021P2; (same as C310).	V506 grid decoupling
C533		Not used.	
C534	B	CAPACITOR, FIXED, PAPER DIELECTRIC: 600 v dc working, 0.5 μf, +20 -10%; uninsulated, Spec MIL-C-25A, MIL type CP53B1EF504V; Hazeltine Elec (contr) part 235-1002P19.	V505 cathode coupling
C535	B	CAPACITOR, FIXED, MICA DIELECTRIC: 300 v dc working, 600 v peak working, 10,000 μμf, ±10%; Spec MIL-C-5A, MIL type CM35B103K; Hazeltine Elec (contr) part 235-1008P79.	V505 cathode coupling
C536 thru C539		Not used.	
C540		CAPACITOR, FIXED, MICA DIELECTRIC: 1000 μμf, ±10%; 500 v dc working; Spec MIL-C-5A; MIL type CM30B102K; Hazeltine Elec (contr) part 235-1008P18.	By-pass for M501
C541		Same as C540.	By-pass for M501
C542		Same as C540.	By-pass for M502
CR501		RECTIFIER, METALLIC: selenium; input 60.4 v rms, single phase; output 48 v dc, 3.0 amp, full-wave rectification; BuShips Spec 17R10; Westinghouse Elec and Mfg (mfr) part 5A42HA1M; Hazeltine Elec (contr) part 232-1014P1.	Magnetron filament voltage rectifier
CR502		CRYSTAL UNIT, RECTIFYING: silicon crystal; Spec MIL-E-1B, MIL type 1N21C; Hazeltine Elec (contr) part 1N21C.	Coho mixer

TABLE 8-3. MAINTENANCE PARTS LIST — Cont'd.

REF. DESIG.	NOTES	NAME AND DESCRIPTION	LOCATING FUNCTION
CR503		Same as CR502.	Signal mixer
E201 thru E220		Not used.	
E221		TERMINAL, LUG: rd tongue end; no. 16 B & S wire; 15/64 in. lg by 7/32 in. w by 17/64 in. h over-all; Zierick Mfg (mfr) part 79534P5.	Grounds for intermediate frequency preamplifier
E222	C	TERMINAL, STUD: 23/32 in. lg by 1/4 in. w across hex flats; round cross-sectional shape, 0.080 in. dia; base uninsulated; Hazeltine Elec (mfr and contr) part 227-1050P2.	Grounds for intermediate frequency preamplifier
E223		SHIELD, ELECTRON TUBE: accommodates RMA tube envelope style T-5-1/2; straight cylinder shape; closed top, vented; brass or copper, nickel plated; 1-3/8 in. lg by 0.810 in. min id; 0.930 in. w inside mtg bosses; Spec MIL-S-28A, type TS102U01; Hazeltine Elec (contr) part 308-1001P1; (same as E154).	For V224
E224		Same as E223.	To shield V225
E225 thru E229		Not used.	
E230		Same as E222.	Grounds for coho amplifier
E231 thru E248		Not used.	
E249		TERMINAL, STUD: 1-5/32 in. lg by 1/4 in. w across hex flats; round cross-sectional shape; body insulated from conductor connection; Winchester Elec Co (mfr) type 764; Hazeltine Elec (contr) part 8890667P3.	Component connection
E250 thru E255		Not used.	
E256		SHIELD, ELECTRON TUBE: accommodates RMA tube envelope style T-6-1/2; straight cylinder shape, closed top; brass or copper, nickel plated; 1.065 in. dia by 1-1/2 in. lg over-all; mounts on tube; Spec MIL-S-28A, type TS103U01; Hazeltine Elec (contr) part 308-1002P1.	For V222
E257		Same as E256.	For V223
E258	C	TERMINAL, STUD: 59/64 in. lg by 5/16 in. w across hex flats; round cross-sectional shape, 0.065 in. dia; base insulated from conductor connection; Cambridge Thermionic Corp (mfr) part X1995-C; Hazeltine Elec (contr) part 227-1027P3.	Component connection
E259	C	TERMINAL, LUG: rd tongue end; accommodates 0.123 in. max dia wire; 41/64 in. lg by 5/16 in. w by 15/64 in. h over-all; Shakeproof (mfr) part 2504-04-00; Hazeltine Elec (contr) part TE-1287-1.	For V222 and V223

TABLE 8-3. MAINTENANCE PARTS LIST — Cont'd.

REF. DESIG.	NOTES	NAME AND DESCRIPTION	LOCATING FUNCTION
E501		MAGNET, PERMANENT: Alnico; 1400 ±50 gauss flux density; two 4 in. dia magnet faces; 3.640 in. w air gap; C shape; 11-7/16 in. max lg by 9-7/8 in. max w by 4-19/32 in. max h over-all; Crucible Steel Co (mfr) type MA-3942; Hazeltine Elec (contr) part 320-1004P1.	Magnetron magnet for V502
E502		TERMINAL BOARD: phenolic board; includes terminals, 17 double screw solder lug type; barrier type; 7 in. lg; H.B. Jones (mfr) part 17-140-3/4WD; Hazeltine Elec (contr) part 247-1014G59.	General purpose
E503		TERMINAL BOARD: phenolic board; includes terminals, 3 double screw solder type; barrier type; 1-3/4 in. lg by 7/8 in. w by 13/32 in. h excluding terminals; H.B. Jones (mfr) part 3-140-3/4WD; Hazeltine Elec (contr) part 247-1014G45; (same as E151).	General purpose
E504		Not used.	
E505	E	SPARK GAP (for reference only; consists of E505A and E505B).	Consists of E505A and E505B
E505A	C	ELECTRODE: solid; brass; 13/32 in. lg by 3/8 in. dia over-all; Hazeltine Elec (mfr and contr) part 1588-1013P1.	Spark gap electrode for T502
E505B	C	ELECTRODE: solid; brass; 3-3/8 in. lg by 1/2 in. dia over-all; Hazeltine Elec (mfr and contr) part 1588-1014P1.	Spark gap electrode for T502
E506		CLIP, ELECTRICAL: grid-plate; phosphor bronze or beryllium copper; cadmium plated; 1.428 in. lg by 3/8 in. od, excluding wire lead; black nylon insulation; includes 1 MIL type RC20BF105J resistor; Hazeltine Elec (mfr and contr) part 376-1025G2.	Cap for V504A
E508	A	INSULATOR, PLATE: type GMG glass cloth melamine resin, Navy Spec 17P25; 8-5/8 in. lg by 1-3/4 in. w by 1/4 in. thk; 4 mtg holes 0.196 in. dia on 5-5/8 in. by 1-1/4 in. mtg centers; includes 2 holes 0.136 in. dia and 2 holes 0.302 in. dia for resistor mtg; Hazeltine Elec (mfr and contr) part 1588-1042P1.	Mounting for R509
E509	A	INSULATOR, PLATE: type NPG plastic; Spec MIL-P-15047B; 2-1/2 in. lg by 2 in. w by 1/8 in. thk; includes 2 holes 0.187 in. dia spaced 1-15/16 in. c to c, and 2 countersunk holes 0.169 in. dia spaced 1-5/16 in. c to c; Hazeltine Elec (mfr and contr) part 1588-1054P1.	Mounting for C504, P516A and P516B
E510	C	KNOB: set screw type; 1.344 in. max lg by 0.912 in. max w by 1.027 in. h over-all; black Tenneastman Tenite II, matte finish; Hazeltine Elec (mfr and contr) part 231-1058G6.	For S506
E511		Refer to R508.	Bleeder resistor assembly
E512	C	TERMINAL BOARD: glass bonded mica board; includes terminals, 13 turret type; 4-1/2 in. lg by 1-7/8 in. w by 1/8 in. thk excluding terminals; Hazeltine Elec (mfr and contr) part 1588-1050G1.	Mounting for R508A through R508L
E513 thru E516		Not used.	
E517		INSULATOR, BUSHING: clear plastic Rex Corp Rexolite no. 1422; 0.498 in. max lg by 0.336 in. max dia over-all, w/1 counterbored holed 0.125 in. dia by 0.064 in. max deep; Hazeltine Elec (mfr and contr) part 1588-1135P2.	For RF502 and RF503A

TABLE 8-3. MAINTENANCE PARTS LIST — Cont'd.

REF. DESIG.	NOTES	NAME AND DESCRIPTION	LOCATING FUNCTION
E518		Not used.	
E519		Same as E517.	For RF502
E520		CONTACT, ELECTRICAL: beryllium copper, silver plated contact surface; 0.687 in. lg by 0.091 in. dia over-all; Hazeltine Elec (mfr and contr) part 1588-1137P1.	For RF502 and RF503A
E521		Not used.	
E522		INSULATOR, BUSHING: plastic, phenolic resin, nylon fabric base, type NPG per Spec MIL-P-15047B; 1.8 in. lg by 0.368 in. max dia over-all; Hazeltine Elec (mfr and contr) part 1588-1147P2.	For RF502 and RF503A
E523		LINE SECTION, RADIO FREQUENCY TRANSMISSION: c/o 1 ea Hazeltine part 1588-158P2 Button, part 1588-1150G1 Slide Assembly, part 1588-1156P4 Inner Conductor, part 1588-1146P1 Insulator, and part 1588-1136P1 Screw; Approx 2-21/32 in. lg by 7/16 in. dia over-all; Hazeltine Elec (mfr and contr) part 1588-1152G1.	Crystal current adjustment contact for RF502 and RF503A
E524		CONTACT, ELECTRICAL: brass, silver plated contact surface; 23/32 in. lg by 0.121 in. max dia over-all, Hazeltine Elec (mfr and contr) part 1588-1192P1.	For RF503A
E525		Not used.	
E526		CONTACT, ELECTRICAL: p/o crystal holder; beryllium copper, silver plated contact surface; 13/16 in. lg by 0.156 in. dia over-all; Hazeltine Elec (mfr and contr) part 1588-1164P1.	For RF502
E527		HOLDER, CRYSTAL UNIT: brass, bright alloy plated; holds item by plug-in type attachment, mounts one end by 9/16 in.-24 NEF-2 coupling nut, other end threaded 5/8 in.-24 NEF-2; Hazeltine Elec (mfr and contr) part 1588-5030G1.	For CR503
E528		INSULATOR, BEAD: teflon, E.I. Dupont De Nemours Co; 0.402 in. max od by 0.122 in. max id by 0.061 in. max thk; Hazeltine Elec (mfr and contr) part 1588-1203P1.	For Z509
E529		CONTACT, ELECTRICAL: beryllium copper, bright alloy plated contact surface; 1.113 in. lg by 0.126 in. dia over-all; Hazeltine Elec (mfr and contr) part 1588-1205P1.	For Z509
E530 thru E532		Not used.	
E533	A	INSULATOR, PLATE: nylon base phenolic; 7-1/16 in. lg by 7/8 in. w by 1/32 in. thk; 4 mtg holes 5/32 in. dia on 6-3/4 in. by 5/16 in. mtg centers; Hazeltine Elec (mfr and contr) part 221-1007P17.	Backing plate for E502
E534		SHELL, ELECTRICAL CONNECTOR: c/o 1 Hazeltine Elec part 276-1158G1 Connector Body, and 1 ea Navy Dwg RE49F246 Symbol no. 3 Nut, RE49F246 Symbol no. 16 Washer, RE49F246 Symbol no. 11 Gasket, and RE49F246 Symbol no. 10 Clamp; approx 1-3/8 in. lg by 1 in. w by 1 in. h over-all; 4 mtg holes 0.125 in. dia on 0.719 in. mtg centers; 2 holes 1/4 in. dia on side; Diamond Instrument Co (mfr) part 2039-1; Hazeltine Elec (contr) part 276-1158G3; (same as E418).	Coaxial termination

TABLE 8-3. MAINTENANCE PARTS LIST — Cont'd.

REF. DESIG.	NOTES	NAME AND DESCRIPTION	LOCATING FUNCTION
E535	A	INSULATOR, PLATE: nylon base phenolic; 1-13/16 in. lg by 7/8 in. w by 1/32 in. thk over-all; 4 mtg holes 5/32 in. dia on 1-1/2 in. by 5/16 in. mtg centers; Hazeltine Elec (mfr and contr) part 221-1007P3; (same as E114).	Backing plate for E503
E536		Same as E222.	Component connection
E537		TERMINAL, STUD: 27/32 in. lg by 1/4 in. w across flats; round cross-sectional shape, 0.080 in. dia, base; uninsulated; Hazeltine Elec (mfr and contr) part 227-1050P4; (same as E129).	Component connection
E538		SHIELD, ELECTRON TUBE: for MIL type 1Z2 tube; straight cylinder shape, closed top, vented; low loss phenolic material per Spec MIL-P-14, type MTS-E-4; 1-31/32 in. lg by 1-5/32 in. dia over-all; thread mounted, no. 1-14 NF-1; Hugh H. Eby (mfr) part 8292; Hazeltine Elec (contr) part 308-1012P2.	For V501
E539	C	SPRING, LEAF: 0.005 in. thk spring temper stainless steel; 20 in. lg by 1 in. w by 3/16 in. h over-all; 8 mtg holes 3/16 in. dia, 4 in. ea section spaced 2-5/8 in. apart on a line 1/4 in. from 1 edge, ea section spaced 3-1/2 in. apart; 4 oval cutouts approx 1/2 in. lg on 1 edge; Hazeltine Elec (mfr and contr) part 1587-1119P1; (same as E125).	Front panel grounding spring
E540	C	PIN, STRAIGHT, HEADED: stainless steel, Navy Spec 46S18, class 1, type D; passivated; flat head, 3/8 in. dia by 1/32 in. h; shank 0.188 in. dia by 0.145 in. max lg from head, recessed to 0.125 in. max dia by 0.144 in. lg; hole 0.062 in. dia by 3/32 in. lg in end; Hazeltine Elec (mfr and contr) part 1593-1003P1; (same as E126).	Mounting studs for A514
E541	C	SPRING, LEAF: stainless steel, AISI 302 full hard; alodine 1200 per Spec MIL-C-5541; 4-5/8 in. lg by 1/2 in. w by 0.005 in. thk excluding tabs; 6 tabs 3/4 in. between centers on bottom edge; Hazeltine Elec (mfr and contr) part 1588-1022P1.	Grounding spring for bottom cover
E542	C	SPRING, LEAF: stainless steel, AISI 302 full hard, no. 2 finish per Spec MIL-S-854, class 2, condition E; 4-11/16 in. lg by 1/2 in. w by 0.005 in. thk excluding tabs; 6 tabs spaced 3/4 in. apart along bottom edge; Hazeltine Elec (mfr and contr) part 1588-1022P2.	Grounding spring for bottom cover
E543 thru E546		Not used.	
E547	C	SPRING, LEAF: stainless steel, AISI 302 spring temper, no. 2 finish per Spec MIL-S-854, class 2, condition E; 21 in. lg by 1-5/16 in. w by 3/16 in. h over-all; right hand; Hazeltine Elec (mfr and contr) part 1588-1113P1.	Chassis grounding spring
E548	C	SPRING, LEAF: stainless steel, AISI 302 spring temper, no. 2 finish per Spec MIL-S-854, class 2, condition E; 21 in. lg by 1-5/16 in. w by 3/16 in. h over-all; left hand; Hazeltine Elec (mfr and contr) part 1588-1113P2.	Chassis grounding spring
E549	C	SPRING, LEAF: stainless steel, AISI 302 spring temper, no. 2 finish per Spec MIL-S-854, class 2, condition E; 18-7/8 in. lg by 1-1/2 in. w by 3/16 in. h over-all; Hazeltine Elec (mfr and contr) part 1588-1114P1.	Chassis grounding spring

TABLE 8-3. MAINTENANCE PARTS LIST — Cont'd.

REF. DESIG.	NOTES	NAME AND DESCRIPTION	LOCATING FUNCTION
E550		INSULATOR, STANDOFF: steatite, grade L-3; 3/8 in. lg by 1/2 in. dia over-all; Spec MIL-I-8, type NS3W0208; Hazeltine Elec (contr) part 222-1001P10; (same as E105).	Standoff mounting insulator
E551	C	SHIELD, ELECTRON TUBE: rectangular shape; aluminum alloy, gray enamel finish; 17-1/8 in. lg by 9-1/8 in. w by 1/2 in. deep excluding fasteners; mounts by 4 integral fasteners; includes 242 square holes; Hazeltine Elec (mfr and contr) part 1588-1253G1.	For V502
E552	E	CONTACT, ELECTRICAL: beryllium copper, silver plated contact surface; 0.721 in. max lg by 0.121 in. max dia over-all; Hazeltine Elec (mfr and contr) part 1588-1097P1; (part of RF501).	For RF501
E553		TERMINAL BOARD: phenolic board; incl terminals, 2 double screw type; barrier type; 1-3/8 in. lg by 7/8 in. w by 13/32 in. h; H.B. Jones (mfr) part 2-140-D; Hazeltine Elec (contr) part 247-1014G2.	General purpose
E554		INSULATOR, BEAD: polystyrene, Spec MIL-P-77, type CTS-E-2; 0.447 in. max od, 0.124 in. max id, 0.273 in. max thk; Hazeltine Elec (mfr and contr) part 1588-1085P1.	For RF501
E555		INSULATOR, PLATE: laminated paper base plastic; 1-7/16 in. lg by 7/8 in. w by 1/32 in. thk; 4 mtg holes 5/32 in. dia on 1-1/8 in. by 5/16 in. mtg centers; Hazeltine Elec (mfr and contr) part 221-1003P2.	Backing plate for E553
E556		TERMINAL, STUD: 3/4 in. lg by 3/16 in. w across hex flats; round cross-sectional shape, 0.142 in. dia; base insulated from conductor connection; Cambridge Thermionic Corp (mfr) part X1980XC-ES242-C modified; Hazeltine Elec (contr) part 227-1049P2.	Component connection
E557		Same as E258.	Component connection
E558	B	ADAPTER, CONNECTOR: 2 contacts; 2 connector mating ends; 1st end: 1 contact, 52 ohms impedance; 2nd end: 1 contact, 52 ohms impedance; low loss plastic insert; straight shape; 3/4 in. dia by approx 1-9/16 in. lg; w/inclosing shell, brass, precious metal plated, resistant to corrosion; locking type; coupling nut w/internal thread 5/8 in. -24 one end, bayonet type coupling other end; AN type UG-201/U; Navy dwg RE49F335; Industrial Products Co (mfr) part 1400; Hazeltine Elec (contr) part 276-1262P1.	Coaxial termination
E559		INSULATOR, BUSHING: clear plastic, Rex Corp Rexolite no. 1442; 0.498 in. max lg by 0.336 in. max dia over-all; Hazeltine Elec (mfr and contr) part 1588-1135P1.	For J511
E560		Same as E559.	For J512
E561		Same as E223.	For V506
E562		PLATE, ELECTRICAL GROUNDING: phosphor bronze; silver plated; saddle shape; 1-1/8 in. lg by 0.823 in. w by 0.430 in. h over-all; 2 mtg holes 0.125 in. dia on 0.875 in. mtg centers; Hazeltine Elec (mfr and contr) part 224-1004P1; (same as E320).	For V506
E563		RETAINER, ELECTRON TUBE: c/o 1 ea Hazeltine part 1588-1304P1 Socket End Plate, part 1588-1322P1 Socket Contact Plate, part 1588-1323P2 and 1588-1323P3 Spring Supports; round, w/3 mtg ears; 2.912 in. dia excluding mtg ears by approx 23/32 in. thk; 3 mtg holes 0.201 in. dia equally spaced on 3-1/2 in. dia circle; includes 27 fingers in socket contact plate; Hazeltine Elec (mfr and contr) part 1588-1323G1.	For V505

TABLE 8-3. MAINTENANCE PARTS LIST — Cont'd.

REF. DESIG.	NOTES	NAME AND DESCRIPTION	LOCATING FUNCTION
E564		Not used.	
E565	B	INSULATOR, STANDOFF: steatite, grade L-3; 1/2 in. lg by 3/8 in. dia over-all; Spec MIL-I-8, type NS3W0104; Hazeltine Elec (contr) part 222-1001P1.	Standoff mounting insulator
E566	E	INSULATOR, BUSHING: teflon, E.I. DuPont De Nemours Co; 0.498 in. max lg by 0.336 in. max dia over-all; Hazeltine Elec (mfr and contr) part 1588-1135P3.	For RF503A
E567		BUS BAR: brass; rectangular cross-sectional shape; solid; cross-sectional dim., 7/16 in. w by 0.050 in. thk; 5-7/16 in. lg over-all; w/one leg bent 90 deg, 1/2 in. lg; Hazeltine Elec (mfr and contr) part 1588-1110P1.	For T502 termination
H201 thru H220		Not used.	
H221	C	THUMBSCREW: stainless steel; knurled thumb head, 3/8 in. h by 1/2 in. dia; flat point; no. 10-32 NF-2 thread, 3/8 in. lg; 15/16 in. lg shank; Hazeltine Elec (mfr and contr) part 8886435P4.	To secure cover A221
H222		Not used.	
H223	C	THUMBSCREW: brass; knurled thumb head, 5/16 in. h by 1/2 in. dia; flat point; no. 10-32 NF-2 thread, 1/2 in. lg; 13/16 in. lg shank; Hazeltine Elec (mfr and contr) part 8895101P1.	To secure preamplifier cover assembly to mounting
H501		WASHER, FINISHING: stainless steel, Navy Spec 46S18, class 7, type A; 0.381 in. max id by 3/4 in. od by 1/8 in. thk; 5/8 in. dia hole countersunk 45 deg by 0.062 in. deep; Hazeltine Elec (mfr and contr) part 1593-1007P1; (same as H315).	Mounting washer for H502
H502		SCREW, MACHINE: stainless steel, Navy Spec 46S18, class 7, type A; hex head, 19/64 in. h by 19/32 in. w across flats; thread 3/8 in.-16 NC-2 to within 7/16 in. of head; shank 1-1/2 in. lg; Hazeltine Elec (mfr and contr) part 207-1030P2; (same as H307).	Mounting for A501
H503		SCREW, EXTERNALLY RELIEVED BODY: stainless steel, Navy Spec 46S18, class 7, type A; passivated, flat fillister head, slot drive, 1/2 in. dia by 3/16 in. h; thread 1/4 in.-20 NC-2, 1/2 in. lg; 1-3/8 in. lg over-all; Hazeltine Elec (mfr and contr) part 209-1008P1; (same as H103).	Mounting screw for A514
H504		SCREW, EXTERNALLY RELIEVED BODY: stainless steel; passivated; fillister head, slot drive, 0.399 in. dia by 0.114 in. h; dim., externally relieved body 0.135 in. max, 0.130 in. min; thread no. 10-24 by 5/16 in. lg; Hazeltine Elec (mfr and contr) part 1587-1016P2.	Mounting screw for B501 filter
H505		SCREW, EXTERNALLY RELIEVED BODY: stainless steel, Navy Spec 46S18, class 7, type A; passivated; knurled double chamfer head, slot drive, 9/16 in. dia by 11/16 in. h; dim. externally relieved body, 1-1/16 in. lg by 1/4 in.-20 NC-2 by 15/32 in. lg thread; Hazeltine Elec (mfr and contr) part 1587-1095P1; (same as H128).	Front panel mounting screw
H506 and H507		Not used.	

TABLE 8-3. MAINTENANCE PARTS LIST — Cont'd.

REF. DESIG.	NOTES	NAME AND DESCRIPTION	LOCATING FUNCTION
H508		GROMMET, RUBBER: synthetic rubber, AN type AN931-A3-5; 7/16 in. od, 5/16 in. od of groove, 1/16 in. thk of flange, 3/16 in. dia hole, 1/4 in. h, 1/8 in. w groove; Spec MIL-G-3036; Hazeltine Elec (contr) part 359-1001P12.	Cable feedthru
H509	C	WASHER, SHOULDERED: brass; 0.150 in. id, 0.468 in. od, 0.135 in. thk over-all; extrusion 0.186 in. od by 0.117 in. h; American Brass Co (mfr) type E3298; Hazeltine Elec (contr) part 236-1081P1; (same as H106).	Centering washer for mounting R507, R515, R517, R518 and R519
H510	C	WASHER, FINISHING: steel; 0.173 in. id, 3/4 in. od, 3/16 in. thk over-all; extrusion 0.473 in. od tapered to 0.400 in. id by 5/32 in. h; Ward Leonard Elec (mfr) part 904; Hazeltine Elec (contr) part 236-1066P2; (same as H409).	Centering washer for mounting R516
H511 and H512		Not used.	
H513		CLAMP, LOOP: nylon; 1 in. lg by 3/8 in. h over-all; designed to hold material 0.190 in. max dia; Burndy Eng Co (mfr) type HP-8N; Hazeltine Elec (contr) part CP-1295-8.	Cable clamp
H514 thru H516		Not used.	
H517	C	SCREW, MACHINE: non-magnetic corrosion resistant steel; hex head; 0.194 in. max h by 7/16 in. w across flats; thread 1/4-20 NC-2, 3/4 in. min lg; 3-3/4 in. lg; Hazeltine Elec (mfr and contr) part 1588-1026P1.	For H554 and H555
H518 and H519		Not used.	
H520	C	HANDLE, PANEL: stainless steel; passivated; 5-3/8 in. lg by 2-5/16 in. w by 3/8 in. dia over-all; 3/8 in. dia grip 4-5/8 in. lg; 2 mtg studs threaded 5/16-18 NC-2 by 11/16 in. lg; Hazeltine Elec (mfr and contr) part 231-1038P1; (same as H129).	For front panel
H521	F	PIN, STRAIGHT, HEADED: annealed stainless steel, Navy Spec 46S18, class 7, type A; passivated; knurled head, 0.381 in. dia by 1/8 in. h; shank 16/32 in. lg, end chamfered 30 deg by 5/32 in. lg; through mtg hole w/1/4 in.-20 NC-2 thread; Hazeltine Elec (mfr and contr) part 1587-1053P1; (same as H130).	Chassis centering pin
H522	C	GROMMET, RUBBER: synthetic rubber; 3/8 in. od, 0.271 in. od of groove, 0.031 in. thk flange, 0.231 in. dia hole, 0.202 in. h, 0.140 in. w groove; 30 to 40 durometer hardness rating; Hazeltine Elec (mfr and contr) part 204-1010P1.	Bushing for E550
H523 and H524		Not used.	
H525		WASHER, FINISHING: stainless steel; passivated; 9/32 in. id by 3/4 in. od by 5/32 in. thk over-all; Hazeltine Elec (mfr and contr) part 362-1018P1; (same as H134).	For H505

TABLE 8-3. MAINTENANCE PARTS LIST — Cont'd.

REF. DESIG.	NOTES	NAME AND DESCRIPTION	LOCATING FUNCTION
H526		Not used.	
H527	C	SCREW, MACHINE: non-magnetic corrosion resisting steel; SAE 1020; hex head, 0.242 in. max h by 1/2 in. max w across flats; thread 5/16 in.-18 NC-2; shank 3-1/2 in. lg; Hazeltine Elec (mfr and contr) part 207-1023P174; (same as H306).	For H530
H528	F	PIN, STRAIGHT, HEADLESS: stainless steel, Navy Spec 46S18, class 7, type A; 3 in. lg over-all, one end 0.625 in. max dia by 1-3/8 in. lg, other end 0.593 in. dia by 1-5/16 in. lg; 1 end chamfered 1/32 in. by 1/32 in., other end chamfered 5/16 in. lg by 15 deg; two 5/16 in. dia holes in shank 1.50 in. apart; Hazeltine Elec (mfr and contr) part 1620-1003P1; (same as H146).	Connecting pin for outer case
H529	F	PIN, STRAIGHT, HEADED: stainless steel, Navy Spec 46S18, class 7, type A; passivated; flat head, 3/8 in. dia by 1/16 in. h; w/1/4 in. lg knurl; shank 0.3125 in. max dia, end chamfered 1/8 in. by 15 deg, 1-1/4 in. over-all lg of shank; Hazeltine Elec (mfr and contr) part 1620-1001P1; (same as H147).	Secures H528
H530	C	HANDLE: 3/8 in. dia rod, AISI 302 annealed stainless steel, Navy Spec 46S18, class 1, type D; sandblasted and passivated; 6 in. lg by 3-1/2 in. w over-all; Hazeltine Elec (mfr and contr) part 1620-1009P1; (same as H144).	Handle for outer case
H531	F	PIN, STRAIGHT, HEADLESS: stainless steel, Navy Spec 46S18, class 1, type D; 2-1/16 in. lg over-all, 0.375 in. max dia by 31/32 in. lg, and 0.249 in. max dia by 1-3/32 in. lg; 1 end rounded on 3/16 in. radius; 0.185 in. dia by 3/16 in. deep hole in 1 end; Hazeltine Elec (mfr and contr) part 1620-1004P1; (same as H148).	Index pin for A514
H532		Not used.	
H533		KNOB: push-on tube; anodized; 31/32 in. lg by 3/4 in. od over-all; integral shaft 3/4 in. lg by 3/8 in. od; Hazeltine Elec (mfr and contr) part 1588-1222P1.	For RF503
H534		BUSHING, PLAIN, SLEEVE: brass, Navy Spec 47B2, condition HH; 0.843 in. id by 1-1/16 in. od by 1-5/8 in. lg over-all; corners chamfered 1/32 in. by 1/32 in.; includes teflon retaining ring; Hazeltine Elec (mfr and contr) part 1588-1249G2.	For RF503
H535		BUSHING, PLAIN, SLEEVE: brass, Navy Spec 47B2, condition HH; 0.906 in. id by 1-1/4 in. od by 1-1/8 in. lg over-all; corners chamfered 1/32 in. by 1/32 in.; includes teflon retaining ring; Hazeltine Elec (mfr and contr) part 1588-1249G1.	For RF503
H536 thru H538		Not used.	
H539	C	NUT, PLAIN, HEXAGON: steel; cadmium plated; 1 or both sided beveled; 7/8 in.-16 NC-2 thread; 1/4 in. max thk by 1-1/16 in. max w across flats; Hazeltine Elec (mfr and contr) part 203-1006P1; (same as H437).	For C508
H540		CLAMP, LOOP: nylon; 23/32 in. lg by 3/8 in. h over-all; designed to hold material 3/16 in. max dia; Burndy Engineering Co (mfr) type HP-3N; Hazeltine Elec (contr) part CP-1295-3.	Cable clamp

TABLE 8-3. MAINTENANCE PARTS LIST — Cont'd.

REF. DESIG.	NOTES	NAME AND DESCRIPTION	LOCATING FUNCTION
H541		CLAMP, LOOP: nylon; 51/64 in. lg by 3/8 in. h over-all; designed to hold material 1/4 in. max dia; Burndy Engineering Co (mfr) type HP-4N; Hazeltine Elec (contr) part CP-1295-4; (same as H107).	Cable clamp
H542		CLAMP, LOOP: nylon; 29/32 in. lg by 3/8 in. h over-all; designed to hold material 3/8 in. max dia; Burndy Engineering Co (mfr) type HP-6N; Hazeltine Elec (contr) part CP-1295-6.	Cable clamp
H543		CLAMP, LOOP: nylon; 15/16 in. lg by 3/8 in. h over-all; designed to hold material 0.44 in. max dia; Burndy Engineering Co (mfr) type HP-7N; Hazeltine Elec (contr) part CP-1295-7.	Cable clamp
H544		CLAMP, LOOP: nylon; 1-7/16 in. lg by 3/8 in. h over-all; designed to hold material 0.84 in. max dia; Burndy Engineering Co (mfr) type HP-14N; Hazeltine Elec (contr) part CP-1295-14; (same as H428).	Cable clamp
H545		Not used.	
H546		RETAINER, ELECTRON TUBE: corrosion resistant steel; passivated; approx 2-1/2 in. lg by 1-7/8 in. w by 1 in. h over-all when open; mounts by bracket w/mtg hole 5/16 in. lg by 3/16 in. w; accommodates 1-1/4 in. dia tube base; Birtcher Corp (mfr) part 926B-16 w/tab; Hazeltine Elec (contr) part 308-1004P2; (same as H109).	For TY501
H547		GROMMET, RUBBER: synthetic rubber, AN type AN931-A407; 5/8 in. od, 7/16 in. od of groove, 1/16 in. thk flange, 1/4 in. dia holes, 1/4 in. h, 1/8 in. w groove; Spec MIL-G-3036; Hazeltine Elec (contr) part 359-1001P13; (same as H407).	Panel grommet
H548		GROMMET, RUBBER: synthetic rubber, AN type AN931-A10-14; 1-1/8 in. od by 7/8 in. od of groove by 1/8 in. thk flange, 5/8 in. dia hole, 3/8 in. h, 1/8 in. w groove; Spec MIL-G-3036; Hazeltine Elec (contr) part 359-1001P18.	Protection for insulated wires
H549	C	STUD, TURNLOCK FASTENER: steel, cadmium plated; 1.062 in. lg by 0.562 in. w by 0.385 in. h over-all; 2 mtg holes 0.193 in. dia on 0.750 in. mtg centers; Dzus Fastener Co (mfr) part RF3-1/2; Hazeltine Elec (contr) part 373-1010P3.	For chassis panels
H550	C	WASHER, FINISHING: aluminum, Spec ANF8-b; 0.218 in. id by 0.375 in. od by 0.025 in. material thk; Dzus Fastener Co (mfr) part GH3-1/2; Hazeltine Elec (contr) part 373-1001P1.	For H549
H551	C	STUD, TURNLOCK FASTENER: steel, cadmium plated; 0.375 in. dia by 0.45 in. lg from mtg surface to locking position; locking bayonet type mtg; Dzus Fastener Co (mfr) part A3-1/2T22; Hazeltine Elec (contr) part 373-1026P1.	For bottom cover
H552	F	NUT, PLAIN, PLATE: stainless steel, Navy Spec 46S18, class 1, type D; passivated; thread 1/4 in.-20 NC-2; two 5/16 in. dia mtg holes 1.125 in. apart; 1-5/8 in. lg by 5/8 in. w over-all; Hazeltine Elec (mfr and contr) part 1593-1004P1; (same as H151).	For outer case
H553	F	PIN, GROOVED, HEADLESS: stainless steel, passivated; 1 in. lg by 5/16 in. dia over-all; 4 grooves 1/4 in. lg 1 end; Driv-Lok Pin Co (mfr) type C; Hazeltine Elec (contr) part 1620-1022P1; (same as H436).	For O585

TABLE 8-3. MAINTENANCE PARTS LIST — Cont'd.

REF. DESIG.	NOTES	NAME AND DESCRIPTION	LOCATING FUNCTION
H554	F	CLAMP: p/o screw type clamp aluminum, Navy Spec 47A10, condition T; 2-3/4 in. lg by 1-1/32 in. w by 7/8 in. deep; accommodates 1.630 in. max dia materials when used w/mating part; Hazeltine Elec (mfr and contr) part 1588-1021P2.	For RF502
H555	F	CLAMP: p/o screw type clamp; aluminum, Navy Spec 47A10, condition T; 2-3/4 in. lg by 2-1/32 in. w by 7/8 in. deep; accommodates 1.630 in. max dia material when used w/mating part; Hazeltine Elec (mfr and contr) part 1588-1021P1.	For RF502
H556	C	SCREW, EXTERNALLY RELIEVED BODY: stainless steel, Navy Spec 46S18, class 7, type A; passivated; single chamfer head, slot drive, 5/8 in. dia by 0.188 in. h; dim., externally relieved body, 2.312 in. lg; thread 1/2-20 NC-2, 11/16 in. lg; Hazeltine Elec (mfr and contr) part 1588-1262P1.	Holds Z511 rigid in shipment
H557	C	STEEL STRAPPING, FLAT: stainless steel, Spec MIL-S-854, class 2, condition 2; 0.122 in. thk by 7/16 in. w; passivated; formed into 131 deg arc on a 3-1/32 in. radius; 3 mtg holes no. 10-24 NC-2 spaced 60 deg apart on 2.781 in. radius; Hazeltine Elec (mfr and contr) part 1588-1127P1; (same as H152).	For B501
H558		RING, RETAINING: stainless steel; 2-5/16 in. id by 3-1/4 in. od by 3/8 in. thk; mtg thread 2-5/16 in.-16 NS-2; includes 6 holes 0.250 in. dia by 5/16 in. deep equally spaced around circumference; Hazeltine Elec (mfr and contr) part 1571-1144P1.	For V502
H559 and H560		Not used.	
H561	C	BUTTON, PLUG: steel; fits 1 in. dia hole; approx 1.19 in. dia by 15/32 in. lg over-all; screen mesh type; 6 prongs equally spaced 0.41 in. lg; United Carr Fastener Corp (mfr) part 99522; Hazeltine Elec (contr) part 279-1004P1.	Chassis plug
H562		BUSHING, PLAIN, SLEEVE: brass, Navy Spec, 47B2 condition half-hard; 0.906 in. id by 1-1/8 in. od by 1-11/16 in. lg over-all; corners chamfered 1/32 by 1/32 in.; includes teflon retaining ring; Hazeltine Elec (mfr and contr) part 1588-1248G1.	Bushing for A516
H563		BUSHING, PLAIN, SLEEVE: brass, Navy Spec 47B2, condition half-hard; 0.906 in. id by 1-1/4 in. od by 1-1/8 in. lg over-all; corners chamfered 1/32 in. by 1/32 in.; includes teflon retaining ring; Hazeltine Elec (mfr and contr) part 1588-1249G3.	Bushing for RF503
H564	C	SCREW, EXTERNALLY RELIEVED BODY: stainless steel, Navy Spec 46S18, class 7, type A; passivated; fillister head, slot drive, 0.226 in. max dia by 0.132 in. max h; dim., externally relieved body, 9/16 in. lg thread no. 6-32 NC-2, 7/32 in. lg; Hazeltine Elec (mfr and contr) part 209-1002P3.	For A516 and A517
H565	C	CLAMP: stainless steel; approx 3-7/8 in. lg by 13/16 in. w, strap material 0.010 in. thk; mounts by rod threaded no. 10-24 NC-2 by 1 in. lg; Hazeltine Elec (mfr and contr) part 1588-1258G1.	Holds A516 to line
H566	C	CLAMP: stainless steel; approx 3-9/16 in. lg by 13/16 in. w, strap material 0.010 in. thk; mounts by rod threaded no. 10-24 NC-2 by 1 in. lg; Hazeltine Elec (mfr and contr) part 1588-1258G2.	Holds A517 to line

TABLE 8-3. MAINTENANCE PARTS LIST — Cont'd.

REF. DESIG.	NOTES	NAME AND DESCRIPTION	LOCATING FUNCTION
H567		Not used.	
H568		INSULATOR, WASHER: nylon, type FM10001; 0.375 in. od by 0.156 in. id by 0.031 in. thk; Hazeltine Elec (mfr and contr) part 236-1033P1.	Part of mounting for C519 and C520
H569	C	NUT, PLAIN, HEXAGON: non-magnetic stainless steel; passivated; double chamfer; no. 2-56 NC-2 thread; 0.066 in. max thk by 3/16 in. max w across flats; Hazeltine Elec (mfr and contr) part 203-1005P1.	For Z511
H570		Not used.	
H571	C	STUD, TURNLOCK FASTENER: steel, cadmium plated; 0.375 in. dia by 0.460 in. lg from mtg surface to locking position; locking bayonet type mtg; Dzus Fastener Co (mfr) part A3-1/2T23; Hazeltine Elec (contr) part 373-1026P2.	For bottom cover
HR501		HEATING ELEMENT, ELECTRICAL: 115 v, 150 w, monel sheath; 8 in. lg by 1-1/2 in. w by 3/8 in. max thk excluding terminals; Watlow Elec Mfg Co (mfr) part 1209D; Hazeltine Elec (contr) part 280-1090P1; (same as HR151).	Space heater
HR502		Same as HR501.	Space heater
I501		ELECTRON TUBE: glass envelope; voltage regulator or indicator; Spec MIL-E-1B, type 991; Hazeltine Elec (contr) part 277-1005P1.	Indicator light
I502		Same as I501.	Indicator light
J201 thru J223		Not used.	
J224	B	CONNECTOR, RECEPTACLE, ELECTRICAL: 1 contact; 1 connector mating end; 500 v peak, 52 ohms, non-constant; low loss plastic insert; straight shape; 3-5/8 in. lg by 1-3/8 in. square excluding contact; w/inclosing shell, brass, precious metal plated; locking type, bayonet coupling; 0.020 in. dia max size cable accommodated; 4 mtg holes, mtg holes tapped w/3-56 NF-2 thd on 1/2 in. by 1/2 in. mtg centers; AN type UG-290/U; Navy dwg RE49F331H; Hazeltine Elec (contr) part 276-1061P1; (same as J153).	Connects input of intermediate frequency preamplifier to W502
J225		Same as J224.	Receiver crystal current output
J226		Not used.	
J227		Same as J224.	Intermediate frequency preamplifier output
J228		CONNECTOR, RECEPTACLE, ELECTRICAL: 5 contacts; 1 connector mating end; 5 contacts, insert per Spec MIL-C-5015; straight shape; 1-11/32 in. lg by 1-3/8 in. w by 1-3/8 in. h over-all; w/inclosing shell, aluminum, cadmium plated; polarized; locking no. 1-20 coupling thread; 1.187 in. dia max size cable accommodated; mtg flange w/4 in. dia holes on 1.062 in. by 1.062 in. mtg centers; Spec MIL-C-5015, type AN3102A-18-20P; Hazeltine Elec (contr) part AN3102A-18-20P.	Connects power input to intermediate frequency preamplifier

TABLE 8-3. MAINTENANCE PARTS LIST — Cont'd.

REF. DESIG.	NOTES	NAME AND DESCRIPTION	LOCATING FUNCTION
J501		CONNECTOR, RECEPTACLE, ELECTRICAL: 1 contact, 1 connector mating end; 50 ohms, constant frequency impedance characteristic; low loss plastic insert; straight shape; 1-7/8 in. lg by 1 in. w by 1 in. h excluding contact; w/inclosing shell, brass, precious metal plated, resistant to corrosion; locking type, coupling thread 5/8 in.-24 NEF-2; 0.357 in. dia max size cable accommodated; 4 mtg holes 1/8 in. dia on 0.718 in. by 0.718 in. mtg centers; AN type UG-19B/U; Navy dwg RE49F402; Industrial Products Co (mfr) part 4600; Hazeltine Elec (contr) part 276-1125P1.	RF test output
J502		Part of RF501; for reference only.	Transmitter power output
J503		CONNECTOR, RECEPTACLE, ELECTRICAL: 1 contact; 1 connector mating end; 500 v max rf; 52 ohms constant impedance; low loss plastic insert; straight shape; 1-1/16 in. lg by 5/8 in. dia body w/1 in. square mtg flange, approx 1-1/16 in. h over-all; w/inclosing shell, brass, precious metal plated; locking type, coupling thread 5/8 in.-24 NC-2; 4 mtg holes 0.125 in. dia on 23/32 in. by 23/32 in. mtg centers; AN type UG-58A/U; Industrial Products Co (mfr) part 7225; Hazeltine Elec (contr) part 276-1030P2; (same as J152).	Coho synchro
J504		Part of RF501; for reference only.	Directional coupler output
J505		CONNECTOR, RECEPTACLE, ELECTRICAL: 1 contact; 1 connector mating end; rubber insert; straight shape; 3-5/8 in. max lg by 1-3/8 in. square excluding contact; w/inclosing shell, brass, tin plated; locking type, coupling thread 1-3/16 in.-18 NEF-2; 0.531 in. dia max cable accommodated; 4 0.169 in. dia mtg holes in flange on 1 in. by 1 in. mtg centers; Industrial Products Co (mfr) type 5400; Hazeltine Elec (contr) part 276-1108P1; (same as J155).	Magnetron pulse input
J506		Same as J503.	Trigger output
J507		Same as J503.	Intermediate frequency output
J508		CONNECTOR, RECEPTACLE, ELECTRICAL: 26 contacts; 1 connector mating end; 22 amp, 700 v dc, 500 v ac working voltage; insert per Spec MIL-C-5015; straight shape; 1-13/32 in. lg by 2 in. w by 2 in. h excluding terminals; w/inclosing shell aluminum; locking type, external coupling thread 1-3/4 in.-18; 4 mtg holes in mtg flange 0.147 in. dia on 1-9/16 in. by 1-9/16 in. mtg centers; Spec MIL-C-5015, type AN3102C-28-12P; Hazeltine Elec (contr) part 276-1131P4; (same as J408).	Main power input
J509		Same as J503.	Coho signal
J510		Part of RF502; for reference only.	Local oscillator signal
J511		ADAPTER, CONNECTOR: 2 contacts; 2 connector mating ends; 1st end: 1 contact, 5000 v, 52 ohms; 2nd end: 1 contact, wedge style, 500 v, 52 ohms; low loss plastic insert; straight shape; 2-9/16 in. lg by approx 11/16 in. dia over-all; w/brass inclosing shell, locking type, coupling nut w/5/8 in.-24 NEF-2 thread one end, male bayonet coupling other end; Hazeltine Elec (mfr and contr) part 1588-5025G1.	Coho signal
J512		Same as J511.	Signal mixer output
J513		Part of Z509; for reference only.	Harmonic filter input

TABLE 8-3. MAINTENANCE PARTS LIST — Cont'd.

REF. DESIG.	NOTES	NAME AND DESCRIPTION	LOCATING FUNCTION
J514		Part of RF503A; for reference only.	Local oscillator injector output
J515		Part of RF503A; for reference only.	Local oscillator input signal
J516		Not used.	
J517		CONNECTOR, RECEPTACLE, ELECTRICAL: 1 contact; 1 connector mating end; 500 v peak, 52 ohms impedance, non-constant impedance characteristic; low loss plastic insert; straight shape; 1-3/64 in. lg by 1/2 in. dia excluding hex nut and lockwasher; w/inclosing shell, brass, precious metal plated; locking type, mtg bushing w/3/8 in.-32 NEF-2 thread; includes hex nut and internal tooth lockwasher on mtg bushing; AN type UG-625/U; Navy Dwg AS-2109; Industrial Products Co (mfr) part 5575; Hazeltine Elec (contr) part 276-1079P1; (same as J307).	Output to coho mixer
J518		Same as J517.	Output signal mixer
J519		Same as J517.	To coho sync
J520		Same as J517.	To coho amplifier
J521		Same as J517.	Connects W507 to J511 on coho mixer
K501		RELAY, ROTARY: armature relay and rotary switch; switch spst; operating voltage 20 v dc min, 28 v dc normal, 32 v dc max; operating current at 28 v dc 3.7 amp dc starting, 0.115 amp dc holding; coil resistance 7.5 ohms starting 260 ohms holding; 2-1/16 in. max dia by 1-7/8 in. max h over-all; Spec MIL-R-2033; Price Elec Corp (mfr) part 8099-11; Hazeltine Elec (contr) part 271-1142P1.	Crystal gate
L201 thru L220		Not used.	
L221		COIL, RADIO FREQUENCY: 1 coil, single layer wound, 34 turns, no. 28 AWG, heavy formex insulation; 2.0 uh at 11.4 mc; 0.1 ohm dc resistance, 1500 ma; Hazeltine Elec (mfr and contr) part/dwg CL-1379.	Plate tuning for V222
L222		COIL, RADIO FREQUENCY: 1 coil, single layer wound, 50 turns, no. 32 AWG heavy formex insulation; 4.6 μf at 7.6 mc, 0.4 ohms dc resistance, 1500 ma; Hazeltine Elec (mfr and contr) part/dwg CL-1380.	Neutralizing for V222
L223		COIL, RADIO FREQUENCY: 1 coil, multiple layer wound, 21 turns, no. 24 AWG, formex insulation; 1.8 uh at 11.75 mc; Hazeltine Elec (mfr and contr) part 375-1426G1.	Heater choke for V223
L224		COIL, RADIO FREQUENCY: 1 coil, single pie universal wound; approx 32 turns, no. 36 AWG silk or nylon covered enamel wire; 4.2 uh at 7.75 mc, resistance less than 1 ohm; Hazeltine Elec (mfr and contr) part 375-1425G1.	Receiver crystal current filter choke
L225		Same as L224.	Receiver crystal current filter choke

TABLE 8-3. MAINTENANCE PARTS LIST — Cont'd.

REF. DESIG.	NOTES	NAME AND DESCRIPTION	LOCATING FUNCTION
L226		Not used.	
L227		COIL, RADIO FREQUENCY: 1 coil, single layer wound, 50 turns, no. 22 AWG, varnish insulation; 2.8 uh at 20 mc, 1.05 ohms dc resistance; Jeffers Elec (mfr) part 10100-9; Hazeltine Elec (contr) part/dwg CL-10010.	Cathode tuning for V223
L228		Same as L223.	Heater choke for V223
L229		Not used.	
L230		COIL, RADIO FREQUENCY: 1 coil, multiple layer wound, 19 turns, no. 31 AWG, formex insulation; 0.64 uh at 20 mc, Hazeltine Elec (mfr and contr) part 375-1179G1.	Intermediate frequency tuning inductance for V223
L231		Not used.	
L232		Same as L230.	Intermediate frequency tuning inductance for V224
L233		Same as L223.	Heater choke for V224
L501		REACTOR: fixed inductance type; 1 coil, 0.05 hy, 0.5 amp dc, 0.9 ohm dc resistance; 1.78 kv rms test voltage; 2-7/16 in. lg by 2-7/16 in. w by 3 in. h; Spec MIL-T-27; Hazeltine Elec (mfr and contr) part 292-1363G1.	Local oscillator filament filter
L502		REACTOR: fixed inductance type; 1 coil, 0.005 hy, 2.2 amp dc, 0.2 ohm dc resistance, 1.78 kv rms test voltage; 2-7/16 in. lg by 2-7/16 in. w by 3 in. h; Spec MIL-T-27; Hazeltine Elec (mfr and contr) part 292-1186G1.	Magnetron filament filter
L503		Not used.	
L504		REACTOR: fixed inductance type; 1 coil, 8 hy, 0.045 amp dc; 1.78 kv rms test voltage; 2-7/8 in. lg by 2-5/8 in. w by 3-5/16 in. h; Spec MIL-T-27; Hazeltine Elec (mfr and contr) part 292-1930G1.	Local oscillator filter
L505		COIL, RADIO FREQUENCY: 1 coil, single layer wound; 39 turns, no. 34 AWG, formex insulation, 1.9 uh at 11.6 mc, resistance less than 1 ohm; Hazeltine Elec (mfr and contr) part 375-1390G1.	V506 grid coupling
L506		COIL, RADIO FREQUENCY: 1 coil, single layer wound; 9 turns, no. 28 AWG, formex insulation, 0.2 uh at 35.4 mc, resistance less than 1 ohm; Hazeltine Elec (mfr and contr) part 375-1391G1.	V506 input tuning
L507		COIL, RADIO FREQUENCY: 1 coil, single layer wound, 50 turns, no. 38 AWG, formex insulation; 12.0 uh at 3.0 mc, resistance less than 1 ohm; Jeffers Elec (mfr) part 10107-2; Hazeltine Elec (contr) part 375-1076P1; (same as L302).	V506 grid decoupling
L508		COIL, RADIO FREQUENCY: 1 coil, single layer wound; 46 turns, no. 34 AWG, formex insulation, 2.3 uh at 10.7 mc, resistance less than 1 ohm; Hazeltine Elec (mfr and contr) part 375-1392G1.	V506 grid tuning
L509		Same as L507.	V506 plate decoupling

TABLE 8-3. MAINTENANCE PARTS LIST — Cont'd.

REF. DESIG.	NOTES	NAME AND DESCRIPTION	LOCATING FUNCTION
L510		COIL, RADIO FREQUENCY: 1 coil, single layer wound, 27 turns, no. 30 AWG, formex insulation, 1.2 uh at 15 mc, resistance less than 1 ohm; Hazeltine Elec (mfr and contr) part 375-1389G1.	V506 plate tuning
M501		METER, ARBITRARY SCALE: mounted type; dc; ua, 0-100 cw, 2 scale divisions, 1 black line at normal 0 and 1 red line at nominal 50 ua position on white background; accuracy 2.5% at half-scale reading; 935 ohms resistance across terminals; calibrated for non-magnetic panel; self-contained; Spec MIL-M-6A (except as noted); Marion Elec (mfr) part HMZ; Hazeltine Elec (contr) part 1590-1111P1.	Crystal current meter
M502		AMMETER: mounted type; dc, ma, 0-100 ma, scale divisions per Spec MIL-M-6A; accuracy 2.5% at full-scale; 150 mv drop across terminals; calibrated for non-magnetic or 0.09 in. thk steel panel; self-contained; Hazeltine Elec (mfr and contr) part 1588-1254P1.	Magnetron plate current meter
MP201	C	SPRING, LEAF: phosphor bronze, no. 88 spring temper, US Fed Spec QQ-B-746, composition B, finish no. 014; 4-5/16 in. lg by 7/8 in. w by 3/8 in. h over-all; irregular channel shaped; nine 0.102 in. dia holes in one leg spaced 1/2 in. between centers; 22 tabs 5/8 in. lg by 3/16 in. w; Hazeltine Elec (mfr and contr) part K8893687P3.	Grounding spring for intermediate frequency amplifier cover
MP202	A	INSULATOR, WASHER: fibre; 3/64 in. od by 0.120 in. id by 1/32 in. thk; Hazeltine Elec (mfr and contr) part/dwg WA-1265.	For C240
MP501	C	SPRING, LEAF: berylco, 25S alloy, 1/4 hard, Beryllium Corp, Spec MIL-C-947; 11/16 in. id by 1-23/32 in. od by 0.006 in. thk excluding tabs; 16 tabs equally spaced around id bent to height of 3/32 in.; Hazeltine Elec (mfr and contr) part 1588-1315P1.	For local oscillator housing assembly
MP502	C	SPRING, LEAF: beryllium copper, Spec MIL-C-947, condition 1/4 hard silver plated; angle shape, legs 96 deg apart; 1 leg 1/2 in. lg, other leg 9/32 in. lg by 3/8 in. w by material 0.015 in. thk; Hazeltine Elec (mfr and contr) part 1588-1378P1.	For local oscillator sleeve assembly
MP503	C	SPRING, LEAF: stainless steel, AISI 302 full hard, no. 2 finish per Spec MIL-S-854, class 2, condition E; 16-1/4 in. lg by 1/2 in. w by 0.005 in. thk excluding tabs; 20 tabs spaced 3/4 in. apart along bottom edge; Hazeltine Elec (mfr and contr) part 1588-1348P4.	Grounding spring for left side panel
MP504	C	SPRING, LEAF: stainless steel, AISI 302 full hard, no. 2 finish per Spec MIL-S-854, class 2, condition E; 6-7/32 in. lg by 1/2 in. w by 0.005 in. thk excluding tabs; 8 tabs spaced 3/4 in. apart along bottom edge; Hazeltine Elec (mfr and contr) part 1588-1348P3.	Grounding spring for right side panel
MP505	C	SPRING, LEAF: stainless steel, AISI 302 full hard, no. 2 finish per Spec MIL-S-854, class 2, condition E; 6-7/32 in. lg by 1/2 in. w by 0.005 in. thk excluding tabs; 8 tabs spaced 3/4 in. apart along bottom edge; Hazeltine Elec (mfr and contr) part 1588-1345P3.	Grounding spring for right side panel
MP506	C	SPRING, LEAF: stainless steel, AISI 302 full hard, no. 2 finish per Spec MIL-S-854, class 2, condition E; 16-1/4 in. lg by 1/2 in. w by 0.005 in. thk excluding tabs; 20 tabs spaced 3/4 in. apart along bottom edge; Hazeltine Elec (mfr and contr) part 1588-1345P4.	Grounding spring for right side panel
MP507	C	WIRE, STEEL: round cross-section, 0.047 in. dia; stainless steel spring wire, annealed; passivated; CMP Code no. 36, 0.005 lb.; Hazeltine Elec (mfr and contr) part 1571-1310P1.	Spring for K501

TABLE 8-3. MAINTENANCE PARTS LIST — Cont'd.

REF. DESIG.	NOTES	NAME AND DESCRIPTION	LOCATING FUNCTION
MP508	E	INSULATOR, BRAD: polystyrene, Spec JAN-P-77, type CTS-E-21; 0.064 in. max id by 0.062 in. min id by 0.284 in. max od by 0.282 min od by 0.192 in. max h by 0.190 in. min h, w/0.010 max w slot through; Hazeltine Elec (mfr and contr) part 1588-1093P1; (part of RF501).	For RF501
MP509	A	INSULATOR, PLATE: phenolic, Formica Insulation Co, type YN-25; 2-1/4 in. lg by 1-5/8 in. w by 1/8 in. thk; Hazeltine Elec (mfr and contr) part 1588-1112P1.	
MP510	C	INSULATOR, RING: teflon; 0.894 in. max id by 0.890 in. min id by 1-1/8 in. od by 1/8 in. material thk; Hazeltine Elec (mfr and contr) part 1588-1274P1.	For local oscillator inner cavity assembly
MP511	C	BUSHING, PLAIN, FLANGED: stainless steel, Navy Spec 46S18, class 7, type A; no. 6-32 NC-2 internal thread through body, 0.265 in. od body, 1/2 in. over-all lg, hex flange 5/16 in. across flats by 3/64 in. w; Hazeltine Elec (mfr and contr) part 1588-1124P1; (part of Z510).	For A512
MP512	C	BUSHING, PLAIN, FLANGED: teflon; 1.006 in. max id body by 1.003 in. min id body by 1 in. over-all lg, 1/8 in. w flange, 1/4 in. left end to flange; Hazeltine Elec (mfr and contr) part 1588-1379P1.	For local oscillator sleeve assembly
MP513	C	BEARING, PLAIN, FLANGED: stainless steel, Navy Spec 46S18, class 7, type A; passivated; 0.126 in. id body by 0.250 in. max od body by 5/16 in. over-all lg; 5/16 in. od flange by 3/32 in. w flange; Hazeltine Elec (mfr and contr) part 1588-1277P1.	For A531
MP514		CLAMP, LOOP: nylon; 13/16 in. lg by 3/8 in. h over-all; designed to hold material 0.310 in. max dia; Burndy Eng Co (mfr) type HP-5N; Hazeltine Elec (contr) part CP-1295-5.	Cable clamp
MP515	E	CONTACT, ASSEMBLY, ELECTRICAL: 2.40 in. lg by 11/16 in. dia over-all; Hazeltine Elec (mfr and contr) part 1588-1353G1; (part of RF501).	For RF501
MP516	C	CONTACT ASSEMBLY, ELECTRICAL: approx 2 in. lg by 0.335 in. dia over-all; Hazeltine Elec (mfr and contr) part 1588-1151G1.	For J511
MP517	E	CONTACT, ELECTRICAL: 8 contact segments, ea 7/32 in. lg by approx 3/16 in. w; beryllium copper; 1-29/32 in. lg by 1/2 in. w by 0.008 in. thk, bent into semicircular shape on 13/16 in. radius; Hazeltine Elec (mfr and contr) part 1588-1257P1; (part of RF501).	For RF501
MP518	E	CONTACT, ELECTRICAL: 24 contact segments, ea approx 3/16 in. lg by 7/32 in. w; beryllium copper; 5-15/16 in. lg by 0.312 in. w by 0.004 in. thk, slots bent on 5/32 in. radius; Hazeltine Elec (mfr and contr) part 1588-1265P1; (part of RF501).	For RF501
MP519	C	SHELL, ELECTRICAL CONNECTOR: brass, Navy Spec, 47B2, condition half-hard; 15/16 in. lg by 5/8 in. dia over-all; large dia end threaded internally w/1/2 in.-20 NF-2 thread; Hazeltine Elec (mfr and contr) part 1588-1154G3.	For RF503A
MP520		CLAMP, LOOP: nylon; 5/8 in. lg by 3/8 in. h over-all; designed to hold material 0.130 in. max dia; Burndy Eng Co (mfr) type HP-2N; Hazeltine Elec (contr) part CP-1295-2.	

TABLE 8-3. MAINTENANCE PARTS LIST — Cont'd.

REF. DESIG.	NOTES	NAME AND DESCRIPTION	LOCATING FUNCTION
N501	C	DIAL, SCALE: engraved 0 thru 9 clockwise, range of inscription is linear; 0.998 in. max od by 0.186 in. thk; w/1/64 in. thk hub; Hazeltine Elec (mfr and contr) part 1588-1069P1.	Part of numerical dial for V502
N502	C	DIAL, SCALE: calibrated 0 thru 100 counterclockwise in single scale divisions, range of inscription is linear, beginning with 0 numerically marked every 10th division; 3 in. dia by 0.040 in. thk; Hazeltine Elec (mfr and contr) part 1588-1078P1.	Dial scale for V502
N503	C	PLATE, IDENTIFICATION: aluminum, anodized; 3 in. lg by 1 in. w by 0.040 in. thk; w/4 corners rounded on 1/8 in. radius; inscribed "DANGER HIGH VOLTAGE"; raised aluminum print on dull red background; Hazeltine Elec (mfr and contr) part 249-1037P1; (same as N101).	Warning label
O501		PACKING, PREFORMED: synthetic rubber, Spec MIL-P-5516, Class B; 3/8 in. id by 9/16 in. od by 3/32 in. thk; AN type 6227-8; Hazeltine Elec (mfr and contr) part 287-1004P8; (same as O313).	Mounting ring for A501
O502		Not used.	
O503		CLIP, ELECTRICAL: non-ejector type; clip of silver plated phosphor bronze, spring of stainless steel; 1-23/64 in. max h by 3-1/16 in. max lg including positioning pin (2-11/16 in. lg excluding pin) by 1-1/2 in. w over-all; Navy type 28019; Hazeltine Elec (mfr and contr) part 343-1009G4.	Mounting for R509
O504		CLIP, ELECTRICAL: ejector type; clip of silver plated phosphor bronze, spring of stainless steel; 1-23/64 in. max h by 3-1/16 in. max lg including positioning pin (2-11/16 in. lg excluding pin) by 1-1/2 in. w over-all; Navy type 28019A; Hazeltine Elec (mfr and contr) part 343-1009G3; (same as O103).	Mounting for R509
O505	F	WASHER, FLAT: round; black neoprene; 35-45 durometer hardness; 3/16 in. id by 11/16 in. od by 1/8 in. thk; Hazeltine Elec (mfr and contr) part 1587-1096P1; (same as O113).	For H505
O506		Not used.	
O507	C	COVER, ELECTRICAL CONNECTOR: metallic material, resistant to corrosion; 3/4 in. dia by 7/16 in. h excluding rivet and chain; internal mtg thread 5/8 in. -24 NEF-2; American Phenolic Corp (mfr) part 83-1 AC; Hazeltine Elec (contr) part 218-1006P1; (same as O303).	For J501, J503, J506 and J507
O508		GASKET: aluminum screen impregnated w/Dupont no. 5580 Fairprene; 5/8 in. dia of aperture by 1 in. square by 0.020 in. thk over-all, 9/64 in. inside corner radius; 4 mtg holes on 0.719 in. by 0.719 in. mtg centers; Bendix Aviation (mfr) part 10-40450-10S; Hazeltine Elec (contr) part 287-1032P4; (same as O131).	Mounting gasket for J503, J506, J507 and J509
O509		GASKET: synthetic rubber; 2-1/8 in. dia of aperture by 2-11/16 in. od; 6 mtg holes 3/32 in. dia equally spaced on 2.44 in. dia circle; Neosil Corp (mfr) part 287-1035P1; Hazeltine Elec (contr) part 287-1035P1; (same as O464).	Mounting gasket for M501 and M502
O510	A	GASKET: synthetic rubber, SAE grade SB612, type ABEFF; 1-3/4 in. dia of aperture, 2 in. sq by 0.031 in. thk, corners rounded on 0.219 in. radius, 4 mtg holes 0.203 in. dia on 1.563 in. by 1.563 in. mtg centers; Bendix Aviation (mfr) part 10-36675-28; Hazeltine Elec (contr) part 287-1030P11; (same as O421).	Mounting gasket for J508

TABLE 8-3. MAINTENANCE PARTS LIST — Cont'd.

REF. DESIG.	NOTES	NAME AND DESCRIPTION	LOCATING FUNCTION
O511		Not used.	
O512	C	COVER, ELECTRICAL CONNECTOR: metallic, resistant to corrosion; 1-3/8 in. dia by 1-17/32 in. lg excluding chain; mounts by internal thread, 1-3/16 in.-18 NEF-2; Hazeltine Elec (mfr and contr) part 1588-5038G1; (same as O121).	For J505
O513		GASKET: aluminum screen shielding impregnated w/DuPont Fairprene no. 55803; 1 in. dia of aperture, 1-3/8 in. sq by 0.031 in. thk, corners rounded on 3/16 in. radius, 4 mtg holes 0.196 in. dia on 1 in. mtg centers; Hazeltine Elec (mfr and contr) part 1588-1057P2; (same as O132).	Mounting gasket for N505
O514		SHAFT ASSEMBLY: c/o 1 ea Hazeltine part 1588-1065P1 shaft, part 1588-1066P1 Lock Nut, part 1588-1074G1 Flexible Shaft, and attaching hardware; cylindrical; approx 7/8 in. dia by 9-15/16 in. lg over-all; Hazeltine Elec (mfr and contr) part 1588-5015G1.	For V502
O515		PACKING, PREFORMED: synthetic rubber, Spec MIL-P-5516, Class B; 1/4 in. id, 3/8 in. od, 1/16 in. thk; AN type 6227-5; Hazeltine Elec (mfr and contr) part 287-1004P5.	For O514
O516		COVER, ELECTRICAL CONNECTOR: metallic, resistant to corrosion; 2-7/16 in. dia by approx 1/2 in. lg excluding chain; mounts by internal thread, 2-1/4 in.-16; American Phenolic Corp (mfr) part 9760-36; Hazeltine Elec (contr) part 218-1010P2.	For RF502
O517	F	PLATE, REINFORCING: half-hard brass, nickel plated; 9/16 in. lg by 1/4 in. w by 0.031 in. thk; 2 mtg holes 5/32 in. dia on 5/16 in. mtg centers; Hazeltine Elec (mfr and contr) part 224-1003P1; (same as O124).	Reinforcing plate for E502, E503 and E553
O518	C	BEARING, PLAIN, FLANGED: oilite, 0.251 in. max id body, 0.250 in. min id body, 0.374 in. max od body, 0.373 in. min od body, 0.437 in. od flange, 0.109 in. w flange; external thread on body 3/8 in.-32 NEF-2 by 5/8 in. lg; Chrysler Corp (mfr) part B-600-1; Hazeltine Elec (contr) part 1588-1068P1.	For O514
O519		Not used.	
O520	C	WASHER, FLAT: round w/1 flat 1-1/2 in. lg cut on circumference; stainless steel, Navy Spec 47S20, class 4, condition B; round hole, 3-1/4 in. dia; 4-1/4 in. od by 0.122 in. thk over-all; includes 6 no. 6-32 NC-2 tapped holes equally spaced on 3.750 in. circle; Hazeltine Elec (mfr and contr) part 1588-1027P1.	Mounting ring for RF502
O521	F	ALUMINUM STRIP: 2-3/4 in. lg by 7/8 in. w by 0.031 in. thk; 2 mtg holes 0.312 in. dia on 2-1/8 in. mtg centers; Hazeltine Elec (mfr and contr) part 1588-1020P2.	Shim, used with H554 and H555
O522	F	ALUMINUM STRIP: 2-3/4 in. lg by 7/8 in. w by 0.017 in. thk; 2 mtg holes 0.312 in. dia on 2-1/8 in. mtg centers; Hazeltine Elec (mfr and contr) part 1588-1020P1.	Shim used with H554 and H555
O523		FILTER, AIR CONDITIONING: aluminum mesh; reusable; 8 in. sq by 1-3/8 in. thk including compression spring on 2 sides; Arm Air Filter Co (mfr) type C56-1405; Hazeltine Elec (contr) part SN-1035-3; (same as O117).	For B501

TABLE 8-3. MAINTENANCE PARTS LIST — Cont'd.

REF. DESIG.	NOTES	NAME AND DESCRIPTION	LOCATING FUNCTION
O524	C	BEARING, SLEEVE: stainless steel, Navy Spec 46S18A, Class 7, condition A; 0.191 in. id body, 0.231 in. max od body, 0.226 in. min od body, 0.121 in. lg over-all, 3/8 in. od flange, 0.023 in. max w flange, 0.018 in. min w flange; Hazeltine Elec (mfr and contr) part 204-1011P1.	For mounting E511 panel
O525	A	GASKET: neoprene; 6-7/8 in. sq aperture by 19/32 in. w bearing surface by 8-1/16 in. sq by 0.050 in. thk over-all; Hazeltine Elec (mfr and contr) part 1587-1070P1; (same as O126).	For B501 filter
O526	F	SPRING, HELICAL, COMPRESSION: music wire, Navy Spec 22W11; round material, 0.023 in. dia material; 2 in. free over-all lg of spring, 1/4 in. od; Hazeltine Elec (mfr and contr) part 1588-1012P1.	For S504 plunger actuator
O527		Not used.	
O528		BALL, BEARING: stainless steel; Rockwell D scale 52-58 hardness; 0.1875 in. dia; Hartford Steel Ball Co (mfr) no. 440 grade 1 material; Hazeltine Elec (contr) part 302-1010P2.	Bearing for N501
O529	F	SPRING, HELICAL, COMPRESSION: stainless steel spring wire; round material, 0.013 in. dia material; 3/8 in. free over-all lg of spring, 5/32 in. od; Hazeltine Elec (mfr and contr) part 1588-1077P1.	Spring for N501
O530		CLIP: steel; 1 in. and 1-1/16 in. nominal id, 19/32 in. w by 1-3/32 in. h over-all; 1-1/16 in. max jaw opening; Prestole Corp (mfr) part 500-1; Hazeltine Elec (contr) part 343-1003P6; (same as O433).	Mounting for C501 and C502
O531		KNOB: set screw type; 3/4 in. h by 1-5/8 in. dia over-all; black; Hazeltine Elec (mfr and contr) part 1588-1079G1.	Part of dial assembly for V502
O532	C	SHAFT: stainless steel, passivated; cylindrical; 1-29/32 in. lg over-all by 0.2495 in. max dia of shaft by 0.156 in. thk by 7/16 in. dia flange located 1-3/16 in. from 1 end; Hazeltine Elec (mfr and contr) part 1588-1067P1.	Part of dial assembly for V502
O533	C	DRIVE, DIAL: stainless steel, passivated; 1-11/16 in. lg by 1-1/4 in. w by 1/4 in. thk over-all; Hazeltine Elec (mfr and contr) part 1588-1073P1.	Part of dial assembly for V502
O534 thru O536		Not used.	
O537	C	GASKET: sponge rubber Globe Rubber Works type 315; 11-1/2 in. lg by 10-7/8 in. w by 1/8 in. thk over-all; 9-3/4 in. sq aperture, 7/8 in. bearing surface w; eight 0.221 in. dia holes; Hazeltine Elec (mfr and contr) part 1587-1078P1; (same as O111).	For B501 filter
O538 and O539		Not used.	
O540		BOOT, DUST AND MOISTURE SEAL: c/o 1 ea Hazeltine part 203-1003P4 Packing Nut, part 203-1003P5 Gasket, part 203-1003P6 Sealing Sleeve; neoprene sealing sleeve and gasket, brass packing nut; approx 0.625 in. w across flats by 9/32 in. thk over-all; mounts by 3/8 in.-32 NEF-2 packing nut; Radio Frequency Labs (mfr) part H-1268; Hazeltine Elec (contr) part 203-1003G2; (same as MP106).	For S506

TABLE 8-3. MAINTENANCE PARTS LIST — Cont'd.

REF. DESIG.	NOTES	NAME AND DESCRIPTION	LOCATING FUNCTION
O541		Not used.	
O542		CLIP, RETAINING: 0.051 in. dia stainless steel, spring temper; passivated; irregular shape; 7/8 in. lg by 0.582 in. h by 0.29 in. w over-all; Hazeltine Elec (mfr and contr) part 1620-1006P1; (same as O139).	Detent spring for outer case
O543 thru O545		Not used.	
O546	C	BUSHING, PLAIN, FLANGED: brass; 0.288 in. id by 1-3/8 in. od by 1-3/64 in. lg over-all; Hazeltine Elec (mfr and contr) part 1588-1221G1.	For RF502
O547		NUT, PLAIN, ROUND: brass, Navy Spec 47B2, condition half-hard; thread 3/4-16 NF-2; 15/16 in. od by 1/2 in. thk over-all, 2 flats 7/8 in. apart; Hazeltine Elec (mfr and contr) part 1588-1167P1.	Coupling nut for RF502
O548 thru O550		Not used.	
O551		SHELL, ELECTRICAL CONNECTOR: brass; cylindrical shape; approx 5/8 in. od by 15/16 in. lg over-all; mounts by internal thread, 1/2 in. -20 NF-2; includes 90 deg diamond knurl; Hazeltine Elec (mfr and contr) part 1588-1154G1.	For J511, J512, RF502 and RF503A
O552		NUT, PLAIN, KNURLED: brass, Navy Spec 47B2, condition half-hard; thread 3/8-40 NS-2; 1/2 in. od by 0.125 in. max thk over-all; 30 teeth per in. 90 deg diamond knurl; Hazeltine Elec (mfr and contr) part 1588-1133P1.	For RF502 and RF503A
O553		PIN, STRAIGHT, HEADLESS: stainless steel, Navy Spec 46S18, Class 1, condition D; 3/16 in. lg by 0.1265 in. max dia; both ends chamfered, 1/16 in. lg by 45 deg; Hazeltine Elec (mfr and contr) part 1588-1134P1.	For RF502
O554		Not used.	
O555		PROBE, WAVEGUIDE: inner conductor for waveguide; brass; 0.126 in. dia by 2.701 in. lg; mtg stud no. 1-64 NC-2 1 end; hole tapped w/no. 1-64 NC-2 by 7/32 in. min lg and 2 slots 1/32 in. w by 3/64 in. deep other end; Hazeltine Elec (mfr and contr) part 1588-1157P2.	For RF502 and RF503A
O556		INSULATOR, BEAD: polystyrene, MIL Spec P77, type CTS-E-2; 0.437 in. max od by 0.254 in. max id by 0.065 in. h; 2 cutouts 180 deg apart, 3/16 in. w by 0.020 in. deep; Hazeltine Elec (mfr and contr) part 1588-1148P1.	For E527 and RF502
O557 thru O561		Not used.	
O562		INSULATOR, WASHER: teflon; 0.328 in. max od by 0.102 in. max id by 0.126 in. thk; Hazeltine Elec (mfr and contr) part 1588-1190P1.	For RF503A, A516 and A517
O563		Not used.	
O564		PIN, STRAIGHT, HEADLESS: brass, Navy Spec 47B2, condition half-hard; 2 in. lg by 0.230 in. max dia; both ends chamfered, 1/32 in. lg by 45 deg; Hazeltine Elec (mfr and contr) part 1588-1235P1.	Mechanical support for A516 and A517

TABLE 8-3. MAINTENANCE PARTS LIST — Cont'd.

REF. DESIG.	NOTES	NAME AND DESCRIPTION	LOCATING FUNCTION
O565 thru O567		Not used.	
O568	C	FERRULE, ELECTRICAL CONDUCTOR: brass; 1/2 in. lg by 11/16 in. od by 0.323 in. id, open end; Hazeltine Elec (mfr and contr) part 1587-1112P1; (same as O138).	Cable termination
O569		Not used.	
O570		INSULATOR, BUSHING: molded polychloroprene; 2-1/2 in. lg over-all by 0.437 in. id by 0.744 in. od, shoulder cap 1/16 in. lg w/1/64 in. w groove, shank 0.552 in. od; AN type 3420-8; Hazeltine Elec (mfr and contr) part 204-1006P4.	For cable termination
O571		INSULATOR, BUSHING: molded polychloroprene; 2-3/8 in. lg over-all; 0.562 in. id by 0.869 in. od, shoulder cap 1/16 in. lg w/1/64 in. w groove, shank 0.615 in. od; AN type 3420-10; Hazeltine Elec (mfr and contr) part 204-1006P5.	For cable termination
O572		Not used.	
O573	C	BUSHING, PLAIN, SLEEVE: stainless steel; 0.390 in. id by 1/2 in. deep counterbored to 0.328 in. dia by 1/8 in. deep, 5/8 in. od one end tapered to 1/2 in. od other end; Hazeltine Elec (mfr and contr) part 204-1009P1; (same as O142).	Bushing for H520
O574	F	PLATE, REINFORCING: brass, Navy Spec 47B2, condition half-hard; 7/8 in. lg by 3/8 in. w by 0.122 in. thk; 2 no. 8-32 NC-2 holes spaced 1/2 in. apart; Hazeltine Elec (mfr and contr) part 224-1008P3; (same as O134).	For O582
O575		Not used.	
O576	C	RUBBER STRIP, CELLULAR: synthetic rubber; Globe Rubber Works type 315; Spec MIL-C-3133, type RS11A; 23-1/16 in. lg by 1/2 in. w by 3/16 in. thk; Hazeltine Elec (contr) part 287-1034P2; (same as O114).	Front panel gasket
O577	B	RING, RETAINING: carbon spring steel, cadmium plated, plain iridite dip; 0.145 in. id by 0.025 in. thk; Waldes Kohinoor (mfr) part 5133-18-MI; Hazeltine Elec (contr) part 362-1015P7; (same as O125).	Part of mounting for O523
O578		Not used.	
O579		CLIP, ELECTRICAL: phenolic; 19/32 in. lg by 7/16 in. od; Alden Products Co (mfr) type 90L; Hazeltine Elec (contr) part 376-1009P1.	Tube contact clip for V501
O580		Not used.	
O581	F	ROLLER, BEARING: round; brass; flat end; 1-1/8 in. dia by 7/16 thk over-all; through mtg hole 0.312 in. dia; Hazeltine Elec (mfr and contr) part 1587-1094P1; (same as MP116).	For receiver-transmitter chassis
O582	F	SPRING, LATCH: flat type; for chassis latch; clock spring steel no. 1095, cadmium plated; 4-5/8 in. lg by 7/16 in. w by 0.062 in. thk; two 0.187 in. dia mtg holes spaced 1 in. c to c; Hazeltine Elec (mfr and contr) part/dwg SP-1605; (same as O127).	Chassis latch spring

TABLE 8-3. MAINTENANCE PARTS LIST — Cont'd.

REF. DESIG.	NOTES	NAME AND DESCRIPTION	LOCATING FUNCTION
O583	C	RUBBER STRIP, CELLULAR: sponge rubber, Globe Rubber Works type 315; rectangular; 21-1/4 in. lg by 7/8 in. w by 3/16 in. thk; 4-3/8 in. dia holes located 2-1/4 in., 7-3/4 in. 13-1/2 in., and 19 in. from 1 end; Hazeltine Elec (mfr and contr) part 1587-1120P1; (same as O130).	Gasket for front panel
O584	F	SPRING, HELICAL, COMPRESSION: music wire, Navy Spec 24W11; round material, 0.031 in. dia material; 1/2 in. free over-all lg of spring, 0.370 in. max od by 0.358 in. min od; Hazeltine Elec (mfr and contr) part 1588-1125P1; (part of Z510).	For Z510
O585	C	ROLLER, BEARING: cylindrical; brass, Navy Spec 47B2, condition half-hard; flat end; 1-1/16 in. od by 0.315 in. max dia id by 7/16 in. thk; Hazeltine Elec (mfr and contr) part 1620-1014P1; (same as O140).	For inner case upper mount assembly
O586	C	BUSHING, PLAIN, FLANGED: stainless steel, Navy Spec 46S18, Class 1, type A; 0.531 in. id body by 0.624 in. max od body by 0.620 in. min od body by 5/16 in. lg over-all; 3/4 in. od flange by 1/16 in. w flange; Hazeltine Elec (mfr and contr) part 1620-1015P1; (same as O146).	For unit inner case
O587	C	CLIP, SPRING TENSION: beryllium copper, Beryllium Corp no. 25 alloy half-hard temper; irregular shape; 2 in. lg by approx 1-1/4 in. w by approx 23/32 in. h over-all; two 0.169 in. dia mtg holes on 1 in. mtg centers; Hazeltine Elec (mfr and contr) part 1620-1016P1; (same as O454).	For O523
O588		GROMMET, RUBBER: synthetic rubber, MIL-R-1149, Class 1, type 1; 4-1/4 in. od by 2-1/8 in. id by 5/8 in. h over-all; semi-conical; 40 to 50 durometer rating; Hazeltine Elec (mfr and contr) part 1588-1028P1.	For RF502
O589	F	SPRING, HELICAL, COMPRESSION: music wire, Navy Spec 22W11; round material, 0.047 in. dia material; 3/4 in. free over-all lg of spring by 1/2 in. od; Hazeltine Elec (mfr and contr) part 1588-1060P1.	For XV505
O590	C	GASKET: aluminum screen shielding impregnated w/DuPont Fairprene no. 5580; 0.697 in. dia of aperture, 1 in. sq, corners rounded on 9/64 in. radius; 4 mtg holes 0.172 in. dia on 0.718 in. by 0.718 in. mtg centers; Hazeltine Elec (mfr and contr) part 1588-1115P1.	For J501
O591		Not used.	
O592	A	GASKET: pure gum rubber; 26-1/16 in. lg by 21-9/16 in. w aperture, 26-11/16 in. lg by 22-3/16 in. w by 1/4 in. thk over-all, 5/16 in. bearing surface w, 7/32 in. inside corner radius, 1/8 in. outside corner radius; Hazeltine Elec (mfr and contr) part 1620-1012P1; (same as O133).	For A514
O593		Not used.	
O594	F	BLOCK, MOUNTING: aluminum alloy, Navy Spec 46A1, Class 2, condition AC; 4-3/4 in. lg by 7/8 in. w by 7/8 in. h over-all; Hazeltine Elec (mfr and contr) part 1620-1010G1; (same as O144).	Mounting block for H530
O595	C	SHELL, ELECTRICAL CONNECTOR: bronze; cylindrical shape; 1-1/8 in. lg by 3/4 in. h by 11/16 in. w across flats; mounts by internal thread, 5/8 in.-24 NEF-2 one end, external coupling thread 5/8 in.-24 NEF-2; Hazeltine Elec (mfr and contr) part 1588-1096P1; (part of RF501).	For RF501

TABLE 8-3. MAINTENANCE PARTS LIST — Cont'd.

REF. DESIG.	NOTES	NAME AND DESCRIPTION	LOCATING FUNCTION
O596	C	VALVE, SAFETY RELIEF: aluminum, painted USMC green; equalizes internal pressure to within 2.5 psi of external atmospheric pressure over external atmospheric pressure range of 15 psi to 4.2 psi; 2-3/4 in. dia by 9/16 in. lg excluding mtg thread; mtg thread 3/4 in.-16 NF-2 by 19/32 in. lg from body on 1 end; includes mtg hardware; A. Schrader Son Co (mfr) part 4594; Hazeltine Elec (contr) part 381-1012P1; (same as O145).	Air pressure valve for outer case
O597		KNOB: screw on type; 2 in. lg by 3/4 in. dia over-all; integral shaft 1-5/8 in. lg by 0.375 in. dia bright alloy plated; Hazeltine Elec (mfr and contr) part 1588-1256P1.	For RF503
O598		KNOB: screw on type; 1-1/4 in. lg by 3/4 in. dia over-all; integral shaft 7/8 in. lg by 0.375 in. dia; bright alloy plated; Hazeltine Elec (mfr and contr) part 1588-1256P2.	For RF503
P201 thru P223		Not used.	
P224	B	CONNECTOR, PLUG, ELECTRICAL: 1 contact; 1 connector mating end; 1 contact; 500 v peak; 52 ohms non-constant impedance; low loss plastic insert; straight shape; 1-1/64 in. lg by 9/16 in. dia over-all; locking type, bayonet coupling; 0.212 in. dia max size cable accommodated; environment resistant; AN type UG-88/U; Industrial Products Co (mfr) part 1200; Hazeltine Elec (contr) part 276-1086P1.	Connects W502 to J224 on intermediate frequency preamplifier
P225		Same as P224.	Crystal current output
P226		Not used.	
P227		Same as P224.	Intermediate frequency preamplifier output
P228		CONNECTOR, PLUG, ELECTRICAL: 5 contact; 1 connector mating end; 5 contacts; insert per Spec MIL-C-5015; angle type, 90 deg; 2-11/16 in. max lg by 2-9/64 in. max w by 1-11/32 in. max h over-all; locking type, one end w/internal coupling thread 1-1/8 in.-18 NF-2, other end w/external conduit thread no. 1-20 NEF-2; cable accommodation at an angle to contact face; Spec MIL-C-5015, type AN3108A-18-20S; Hazeltine Elec (contr) part 276-1238P1.	Connects power input to intermediate frequency preamplifier
P501	E	CONNECTOR, PLUG, ELECTRICAL: one rd female contact; straight type; 1-7/8 in. lg by 13/16 in. dia over-all; AN type UG-21B/U; cylindrical brass body, 0.440 in. dia cable opening; mounts by 5/8-24 NEF-2 internal thread coupling on one end, threaded gland nut other end; Spec MIL-C-71A; Industrial Products Co (mfr) part 4300; Hazeltine Elec (contr) part 276-1031P1; (part of W17; same as P3; for reference only).	Part of Tuned Cavity TS-172B/UP
P502		Not used.	
P503		CONNECTOR, PLUG, ELECTRICAL: 1 contact; 1 connector mating end; 1 contact; 500 v peak; 50 ohms impedance; low loss plastic insert; straight shape; 1-7/8 in. lg by 25/32 in. dia over-all; locking type, 5/8 in.-24 NEF-2 coupling nut; 3/8 in. dia max size cable accommodated; environment resistant; Spec MIL-C-71A, type UG-18B/U; Navy dwg RE49F402; Hazeltine Elec (contr) part 276-1029P1; (same as P302).	Cable termination for W2

TABLE 8-3. MAINTENANCE PARTS LIST — Cont'd.

REF. DESIG.	NOTES	NAME AND DESCRIPTION	LOCATING FUNCTION
P504		Same as P503.	Mates with J504
P505		CONNECTOR, PLUG, ELECTRICAL: 1 contact; 1 connector mating end; 1 contact; 5000 v peak at 50,000 ft, high voltage pulse type; low loss plastic insert; straight shape; 4-1/4 in. lg by 1-5/16 in. dia over-all; locking type, 1-3/16 in.-18 NEF-2 coupling thread; 17/32 in. dia max size cable accommodated; environment resistant; Army-Navy type UG-182A/U; Navy dwg RE49F330; Hazeltine Elec (contr) part 276-1102P1.	Cable termination for W2
P506		Same as P503.	Cable termination for W9
P507		Same as P503.	Cable termination for W5
P508		CONNECTOR, PLUG, ELECTRICAL: 26 contacts; 1 connector mating end; 26 contacts; rated 22 amp, 700 v dc, 500 v ac; synthetic rubber insert; straight shape; 2.251 in. lg by 1.969 in. dia over-all; locking type, one end threaded w/internal coupling thread 1-3/4 in.-18 NEF-2, other end w/external conduit thread 1-7/16 in.-18 NEF-2; pressurized; Bendix Aviation Corp (mfr) part AN3106C-28-12S black anodized; Hazeltine Elec (contr) part 276-1160P4; (same as P408).	Cable termination for W8
P509		Not used.	
P510		Same as P224.	Mates with J510
P511	B	CONNECTOR, PLUG, ELECTRICAL: 1 contact; 1 connector mating end; 1 contact; 12,500 v peak; 50 ohms impedance; low loss plastic insert; straight shape; 31/32 in. lg by 9/16 in. dia over-all; locking type, bayonet coupling; 0.258 in. dia max size cable accommodated; environment resistant; AN type UG-260/U; Navy dwg RE49F380; Industrial Products Co (mfr) part 3100; Hazeltine Elec (contr) part 276-1062P1; (same as P308).	Mates with E504
P512		Same as P511.	Mates with J512
P513		Same as P511.	Mates with J513
P514		Same as P511.	Mates with J514
P515		Same as P511.	Mates with J515
P516		Not used.	
P516A		CONNECTOR, PLUG, ELECTRICAL: 1 contact; 1 connector mating end; 1 contact; straight type; 1-1/4 in. lg by 0.247 in. dia over-all; spring locking type; mtg stud one end w/no. 6-32 NC-2 thread; Ucinite Co (mfr) parts 153158 and C-1984; Hazeltine Elec (contr) part 276-1063G1.	Magnetron filament connector
P516B		Same as P516A.	Magnetron filament connector
P517		Same as P224.	Mates with J517
P518		Same as P224.	Mates with J518

TABLE 8-3. MAINTENANCE PARTS LIST — Cont'd.

REF. DESIG.	NOTES	NAME AND DESCRIPTION	LOCATING FUNCTION
P519		Same as P224.	Mates with J519
P520		Not used.	
P521		Same as P511.	Mates with J521
R201 thru R225		Not used.	
R226	B	RESISTOR, FIXED, COMPOSITION: 62 ohms, ±5%; 1/2 w; F characteristic; body 0.416 in. max lg by 0.161 in. max od; insulated; Spec MIL-R-11A, MIL type RC20BF620J; Hazeltine Elec (contr) part 280-1015P30.	Cathode bias for V222
R227		Same as R226.	Cathode bias for V223
R228		RESISTOR, FIXED, COMPOSITION: 1500 ohms, ±5%; 1/2 w; F characteristic; body 0.416 in. max lg by 0.161 in. max od; insulated; Spec MIL-R-11A, MIL type RC20BF152J; Hazeltine Elec (contr) part 280-1015P79.	Grid for V224
R229	B	RESISTOR, FIXED, COMPOSITION: 100 ohms, ±5%; 1/2 w; F characteristic; body 0.416 in. max lg by 0.161 in. max od; insulated; Spec MIL-R-11A, MIL type RC20BF101J; Hazeltine Elec (contr) part 280-1015P37.	B+ voltage decoupling for V222
R230		Same as R229.	B+ voltage decoupling for V223
R231	B	RESISTOR, FIXED, COMPOSITION: 220 ohms, ±5%; 1/2 w; F characteristic; body 0.416 in. max lg by 0.161 in. max od; insulated; Spec MIL-R-11A, MIL type RC20BF221J; Hazeltine Elec (contr) part 280-1015P49.	Cathode bias for V224
R232		Same as R228.	Grid for V225
R233		Same as R229.	V224 plate B+ decoupling
R234		Same as R231.	Cathode bias for V225
R235		Not used.	
R236	B	RESISTOR, FIXED, COMPOSITION: 4700 ohms, ±5%; 1/2 w; F characteristic; body 0.416 in. max lg by 0.161 in. max od; insulated; Spec MIL-R-11A, MIL type RC20BF472J; Hazeltine Elec (contr) part 280-1015P97; (same as R131).	To load primary of T222
R501	B	RESISTOR, FIXED, COMPOSITION: 470,000 ohms, ±5%; 1 w; F characteristic; body 0.760 in. max lg by 0.264 in. max od; insulated; Spec MIL-R-11A, MIL type RC30BF474J; Hazeltine Elec (contr) part 280-1002P169; (same as R453).	Bleeder, V501
R502		Same as R501.	Bleeder, V501
R503		Same as R501.	Bleeder, V501
R504		Same as R501.	Bleeder, V501

TABLE 8-3. MAINTENANCE PARTS LIST — Cont'd.

REF. DESIG.	NOTES	NAME AND DESCRIPTION	LOCATING FUNCTION
R505	B	RESISTOR, FIXED, COMPOSITION: 100,000 ohms, ±5%; 1 w; F characteristic; insulated; Spec MIL-R-11A, MIL type RC30BF104J; Hazeltine Elec (contr) part 280-1002P145; (same as R401).	Current limiting resistor, V501
R506		RESISTOR, FIXED, COMPOSITION: 33,000 ohms, ±5%; 1/2 w; F characteristic; insulated; Spec MIL-R-11A, MIL type RC20BF333J; Hazeltine Elec (contr) part 280-1015P127; (same as R133).	Current limiter for I501
R507		RESISTOR, FIXED, WIREWOUND: noninductive winding; 8 ohms, ±5%; 10 w, 275 deg C max continuous operating temp, 25 deg C ambient temp; resistant to humidity; Spec MIL-R-26B; type RW31G8R0; Hazeltine Elec (contr) part 280-1006P19.	Metering resistor for TY501
R508	D	RESISTOR ASSEMBLY: 12 resistors, fixed composition type, 1 meg, ±10%, 1 w; MIL type RC30BF105K; series connected; Hazeltine Elec (contr) part 1588-5009G1.	Bleeder resistor assembly
R508A	B	RESISTOR, FIXED, COMPOSITION: 1 megohm, ±5%; 1 w; F characteristic; insulated; Spec MIL-R-11A, MIL type RC30BF105J; Hazeltine Elec (contr) part 280-1002P181.	Bleeder for V502
R508B		Same as R508A.	Bleeder for V502
R508C		Same as R508A.	Bleeder for V502
R508D		Same as R508A.	Bleeder for V502
R508E		Same as R508A.	Bleeder for V502
R508F		Same as R508A.	Bleeder for V502
R508G		Same as R508A.	Bleeder for V502
R508H		Same as R508A.	Bleeder for V502
R508I		Same as R508A.	Bleeder for V502
R508J		Same as R508A.	Bleeder for V502
R508K		Same as R508A.	Bleeder for V502
R508L		Same as R508A.	Bleeder for V502
R509		RESISTOR, FIXED, WIREWOUND: super noninductive; 20 ohms ±5%; 90 w (nom), 275 deg C max continuous operating temp; body 6-7/16 in. lg by 1-3/8 in. max, 1-1/16 in. min od; glass coating; term 33/64 in. lg by 1-9/64 in. dia; Sprague Elec (mfr) part 90SIF; Hazeltine Elec (contr) part 280-1074P1.	Despiking resistor
R510	B	RESISTOR, FIXED, FILM: 100 ohms ±1%; 1/2 w; +0.040% to -0.020% of total resistance per deg C temp coefficient; body 5/8 in. lg by 0.370 in. max od; insulated; Continental Carbon (mfr) type X-1/2; Hazeltine Elec (contr) part 280-1058P32.	Shunt for M501
R511 through R513		Not used.	
R514	B	RESISTOR, FIXED, FILM: 30,000 ohms ±1%; 1/2 w; -0.025 to -0.040% of total resistance per deg C temp coefficient; body 5/8 in. lg by 0.370 in. max od; insulated; Continental Carbon (mfr) type X-1/2; Hazeltine Elec (contr) part 280-1058P29.	Multiplier for M501

TABLE 8-3. MAINTENANCE PARTS LIST — Cont'd.

REF. DESIG.	NOTES	NAME AND DESCRIPTION	LOCATING FUNCTION
R515		RESISTOR, FIXED, WIREWOUND: noninductive; 1 ohm, ±5%; 10 w, 275 deg C max continuous operating temp, 25 deg C ambient temp; body 1-1/2 in. lg by 19/32 in. od; coated per Spec MIL-R-26B; resistant to humidity; term 21/64 in. lg by 11/64 in. to 21/64 in. w by 0.016 in. min thk; Spec MIL-R-26B; type RW31G1RO; Hazeltine Elec (contr) part 280-1006P1.	Metering resistor
R516	B	RESISTOR, FIXED, WIREWOUND: noninductive winding; 50 ohms, ±5%; 38 w, 275 deg C max continuous operating temp, 25 deg C ambient temp; body 4 in. lg by 29/32 in. max od; resistant to humidity and moisture; term 23/64 in. lg by 11/64 in. to 21/64 in. w by 0.016 in. min thk; Spec MIL-R-26B; type RW35G500; Hazeltine Elec (contr) part 280-1010P35; (same as R404).	Filament dropping resistor
R517	B	RESISTOR, FIXED, WIREWOUND: noninductive winding; 1000 ohms, ±5%; 10 w, 275 deg C max continuous operating temp, 25 deg C ambient temp; body 1-1/2 in. lg by 19/32 in. od; vitreous enamel coating, resistant to humidity; term 21/64 in. lg by 21/64 in. max w by 0.016 in. thk; axial center mtg hole 5/16 in. dia; Spec MIL-R-26B type RW31G102; Hazeltine Elec (contr) part 280-1006P61.	Filter
R518	B	RESISTOR, FIXED, WIREWOUND: noninductive winding; 28 ohms, ±5%; 12 w, 275 deg C max continuous operating temp, 25 deg C ambient temp; body 2 in. lg by 19/32 in. od; glass inclosure, resistant to humidity; term 21/64 in. lg by 11/64 in. to 21/64 in. w by 0.016 in. min thk; through-center mtg hole w/clearance for no. 6 screw; Spec MIL-R-26B, type RW32G280; Hazeltine Elec (contr) part 280-1007P30.	Dropping resistor
R519		Same as R518.	Dropping resistor
R520	B	RESISTOR, FIXED, COMPOSITION: 33,000 ohms, ±5%; 1/2 w; F characteristic; body 0.416 in. max lg by 0.161 in. max od; insulated; Spec MIL-R-11A, MIL type RC20BF333J; Hazeltine Elec (contr) part 280-1015P127; (same as R506).	Current limiting
R521	B	RESISTOR, FIXED, WIREWOUND: inductive winding; 8000 ohms, ±5%; 18 w, 275 deg C max continuous operating temp, 25 deg C ambient temp; body 3 in. lg by 19/32 in. max od by 5/16 in. id; protective covering per Spec MIL-R-26B, resistant to humidity; terminals 21/64 in. max lg by 11/64 in. to 21/64 in. w; Spec MIL-R-26B; type RW33G802; Hazeltine Elec (contr) part 280-1008P75.	Grid, V508
R522	B	RESISTOR, FIXED, COMPOSITION: 2.2 megohms, ±5%; 1 w; F characteristic; body 0.760 in. max lg by 0.264 in. max od; insulated; Spec MIL-R-11A, MIL type RC30BF225J; Hazeltine Elec (contr) part 280-1002P193.	Current limiting
R523	B	RESISTOR, FIXED, COMPOSITION: 1.5 megohms, ±5%; 1 w; F characteristic; body 0.760 in. max lg by 0.264 in. max od; insulated; Spec MIL-R-11A, MIL type RC30BF155J; Hazeltine Elec (contr) part 280-1002P187.	Current limiting
R524		ABSORBER, RADIO FREQUENCY RADIATION: impedance 50 ohms, ±10%; body 0.416 in. dia by 0.026 in. thk; International Resistance (mfr) part VC-14204; Hazeltine Elec (contr) part 1532-1076P1.	RF absorber
R525		Same as R524.	RF absorber

TABLE 8-3. MAINTENANCE PARTS LIST — Cont'd.

REF. DESIG.	NOTES	NAME AND DESCRIPTION	LOCATING FUNCTION
R526		RESISTOR, FIXED, WIREWOUND: noninductive winding; 4.7 ohms, ±5%; 1 w, 88 deg C max continuous operating temp, 40 deg C ambient temp; body 1-9/32 in. max lg by 9/32 in. max dia; coated per Spec JAN-R-184, resistant to salt water; Spec JAN-R-184 type RU4B4R7J; Hazeltine Elec (contr) part 280-1063P25.	Arc suppressor
R527 thru R530		Not used.	
R531		Same as R231.	V506 cathode bias
R532		Same as R236.	V506 plate load
R533		Same as R231.	V506 screen decoupling
R534		Not used.	
R535	B	RESISTOR, FIXED, COMPOSITION: 1000 ohms, ±5%; 1 w; F characteristic; body 0.760 in. max lg by 0.264 in. max od; insulated; Spec MIL-R-11A, MIL type RC30BF102J; Hazeltine Elec (contr) part 280-1002P73; (same as R101).	V505 cathode decoupling
R536	B	RESISTOR, FIXED, COMPOSITION: 150 ohms, ±5%; 1 w; F characteristic; body 0.760 in. max lg by 0.264 in. max od; insulated; Spec MIL-R-11A, MIL type RC30BF151J; Hazeltine Elec (contr) part 280-1002P43.	Filament load resistor for V505
RF501		COUPLER, ELECTRON TUBE: c/o rf conductor assembly terminated in Hazeltine part 1588-1087P2 Adapter 1st end, part 1588-1105G1 Magnetron Conductor and 1588-1353G1 Contact Assembly 2nd end, part 1588-1250P1 Support Stub Cap 3rd end, part 1588-1097P1 Contact 4th end; irregular shape; approx 18-5/8 in. lg by 6-3/4 in. w by 7-11/16 in. h over-all, marked "J504 and RF501"; Hazeltine Elec (mfr and contr) part 1588-5056G1.	RF transmission line
RF502		LINE SECTION, RADIO FREQUENCY TRANSMISSION: c/o conductor assembly terminated in Hazeltine part 1588-1144P1 Loop 1st end, part 1588-1154P1 Body 2nd end, part 1588-5025G1 Adapter Assembly 3rd end, part 1588-1152G1 Inner Conductor Assembly 4th end, part 1588-1163P1 Cap 5th end; approx 4-21/32 in. lg by 3-7/8 in. w by 3-3/8 in. h over-all; marked "RF502, J510, J511, and CR502"; Hazeltine Elec (mfr and contr) part 1588-5026G1.	Coho mixer assembly
RF503		DUPLEXER: manual tuning; approx 9-11/16 in. lg by 8 in. w by 4-7/8 in. h excluding skirt; rf conductor protrusions and solenoid assembly; marked "RF503, V503A and V504A"; includes 2 electron tubes MIL type 6322; Hazeltine Elec (mfr and contr) part 1588-5033G1.	Electron switch for switching from transmitter to receiver
RF503A		LINE SECTION, RADIO FREQUENCY TRANSMISSION: c/o rf conductor assembly terminated in Hazeltine part 1588-1154P3 Connector Body and 1588-1356P1 Contact 1st end, part 1588-1152G1 Inner Conductor Assembly and 1588-1133P1 Lock Nut 2nd end, part 1588-1154P1 Connector Body and 1588-1137P1 Contact 3rd end, part 1588-1195P1 Coupling Nut and 1588-1192P1 Contact 4th end; irregular shape; approx 5-5/16 in. lg by 3-1/16 in. w by 3/4 in. h over-all; marked "J514, RF503A, J515"; Hazeltine Elec (mfr and contr) part 1588-5028G1.	Local oscillator injector

TABLE 8-3. MAINTENANCE PARTS LIST — Cont'd.

REF. DESIG.	NOTES	NAME AND DESCRIPTION	LOCATING FUNCTION
S501		SWITCH, THERMOSTATIC: spst; open above 185 ±7 deg F; 10 amp, 120 v ac or 30 v dc; 2-9/16 in. dia by 1-11/64 in. h; Spencer Thermostat (mfr) part C4370-16; Hazeltine Elec (contr) part 271-1090P0; (part of Z510).	Magnetron oven temperature control
S502		SWITCH, SENSITIVE: spst, double break, normally closed; 10 amp, 115/230 v ac; body 1-1/4 in. lg by 1/2 in. w by 13/32 in. h; button type actuator, 0.141 in. and 0.453 in. from centers of mtg holes to free positions of actuator, 0.027 in. max differential movement, 0.059 in. max pre-travel; 20 oz max operating force; 3 oz min release force; momentary action; General Electric (mfr) part CR1070-C103A3; Hazeltine Elec (contr) part 228-1156P1.	Local oscillator limit switch
S503		Same as S502.	Limit switch
S504		SWITCH, PUSH: dpst; 12 amp at 125 v or 6 amp at 250 v ac and dc; momentary action, normally open, lock w/external manual latch; 1-7/8 in. lg by 53/64 in. w by 1-7/64 in. h excluding actuator; actuator 1-3/32 in. lg; Cutler Hammer (mfr) part 8909K128; Hazeltine Elec (contr) part 228-1003P1; (same as S153).	Local oscillator limit switch
S505		SWITCH, THERMOSTATIC: spst, double break; open at 15 deg C and close at 0 deg C, ±3 deg C, 8 amp, 125 v ac (40 cycles per second and above); 0.750 in. max lg by 0.359 in. max w by 49/64 in. h excluding terminals, term 5/16 in. max lg; Stevens Manufacturing (mfr) type M; Hazeltine Elec (contr) part 271-1091P2; (same as S155).	Heater control HR501 and HR502
S506		SWITCH, ROTARY: 1 section; 4 positions, max number of switching positions possible; nonpile-up type, 2 moving contacts, 12 fixed contacts; nonshorting contacts, 1-1/8 in. lg by 1-7/8 in. w by 1-33/64 in. h; flatted type shaft 1-1/4 in. lg by 1/4 in. dia; Oak Mfg (mfr) part HC; Hazeltine Elec (contr) part 1588-1001P1.	Meter switch
S507		Same as S502.	B503 cam switch
T201 thru T221		Not used.	
T222		TRANSFORMER, RADIO FREQUENCY: 14.5 to 38.5 mc frequency range; 2 windings; primary winding 1.2 uh at 14.5 mc, 9 turns no. 30 AWG wire size, untapped; secondary winding 0.17 uh at 38.5 mc, 2 turns no. 28 AWG wire size, untapped; 31/32 in. lg by 0.490 in. dia excluding terminals; Hazeltine Elec (mfr and contr) part A-19540.	Intermediate frequency preamplifier output
T223		TRANSFORMER, INTERMEDIATE FREQUENCY: 60 mc peak frequency; input; 1-1/16 in. lg by 41/64 in. w by 0.490 in. h excluding terminals and tuning screws; tuned secondary only; capacitor tuning; Hazeltine Elec (mfr and contr) part/dwg A-19539.	Intermediate frequency preamplifier input
T501		TRANSFORMER, POWER, STEP-DOWN AND STEP-UP: hermetically sealed metal case; primary 115 v, 400 cycles, single phase; secondary no. one 860 v at 0.002 amp, secondary no. two 1.25 v at 0.27 amp; primary and secondary no. two 1780 v rms, secondary no. one 4000 v rms; air cooled; impregnated acme molding compound filled; 2-3/32 in. lg by 1-23/32 in. w by 2-29/32 in. h excluding terminals; Spec MIL-T-27; Hazeltine Elec (mfr and contr) part 292-1240G1.	Keep alive power supply

TABLE 8-3. MAINTENANCE PARTS LIST — Cont'd.

REF. DESIG.	NOTES	NAME AND DESCRIPTION	LOCATING FUNCTION
T502		TRANSFORMER, PULSE: interstage type; primary 15 ohms impedance, 0.0146 ohm dc resistance, bifilar secondary winding 580 ohms impedance, 0.925 ohm dc resistance ea winding; primary winding 4.75 kv peak at 316 amp, secondary bifilary winding 29.6 kv peak at 51 amp, tertiary 170 v at 6 amp; insulation test voltage not rated; 7-13/16 in. lg by 7-11/16 in. w by 6-9/32 in. h excluding terminals; Spec MIL-T-27; Hazeltine Elec (mfr and contr) part 363-1022G1.	Magnetron pulse transformer
T503		TRANSFORMER, POWER, STEP-DOWN: hermetically sealed metal case; primary 115 v, 400 cycles, single phase; 1 output winding, 6.3 v at 3.1 amp; insulation test voltage 1780 rms; air cooled; impregnated, wax filled; 2-7/16 in. lg by 2-7/16 in. w by 3-19/32 in. h excluding terminals and mtg studs; Spec MIL-T-27; Hazeltine Elec (mfr and contr) part 292-1311G1.	Filament supply intermediate frequency preamplifier
T504		TRANSFORMER, POWER, STEP-DOWN: hermetically sealed metal case; primary 115 v, 400 cycles, single phase; 1 output winding, 36 v at 2.43 amp; insulation test voltage 1780 v rms; air cooled; impregnated, wax filled; 2-7/8 in. lg by 2-5/8 in. w by 3-7/8 in. h excluding terminals and mtg studs; Spec MIL-T-27; Hazeltine Elec (mfr and contr) part 292-1187G1.	Magnetron filament supply
TB501	C	TERMINAL BOARD: phenolic board; includes 7 terminals, screw type; 4-7/8 in. lg by 1-3/4 in. w by 1/8 in. thk excluding terminals; Hazeltine Elec (mfr and contr) part 1588-1035G1.	Mounting panel for R501 through R505
TB502	C	TERMINAL BOARD: phenolic board; includes 8 terminals, screw type; 4-1/2 in. lg by 2 in. w by 1/8 in. thk excluding terminals; Hazeltine Elec (mfr and contr) part 1588-1061G1.	Mounting panel for R510, R514, C511 and C524
TB503	C	TERMINAL BOARD: phenolic board; includes 3 terminals, screw type; 2-1/2 in. lg by 1 in. w by 1/8 in. thk excluding terminals; Hazeltine Elec (mfr and contr) part 1588-1107G1.	Mounting for R522 and R523
TB504	C	TERMINAL BOARD: phenolic board; includes 2 terminals, screw type; 2 in. lg by 1-3/8 in. w by 1/8 in. thk excluding terminals and hole inserts; Hazeltine Elec (mfr and contr) part 1588-1036G1.	Mounting panel for C510
TP501		JACK, TIP: 1 female contact; 1 connector mating end; 600 v peak operating voltage; black nylon body; straight shape; 31/32 in. lg by 3/8 in. dia over-all; single hole mtg bushing 1/4 in.-28 NF-2 by 7/16 in. min lg, hex mtg nut 15/32 in. max across points; Diamond Instrument Co (mfr) part A-10002-1; Hazeltine Elec (contr) part 276-1137G1; (same as TP152).	Test point local oscillator filament current
TP502		JACK, TIP: 1 female contact; 1 connector mating end; 600 v peak operating voltage; red nylon body; straight shape; 31/32 in. lg by 3/8 in. dia over-all; single hole mtg bushing 1/4 in.-28 NF-2 by 7/16 in. min lg; hex mtg nut 15/32 in. max across points; Diamond Instrument Co (mfr) part A-10001-1; Hazeltine Elec (contr) part 276-1137G2; (same as TP101).	Test point local oscillator filament current
TY501		RESISTOR, CURRENT REGULATING: designed for ac and dc operation, 15.2 to 22.8 v drop, 0.75 to 0.79 amp, 10 w; envelope type T-9 per Spec MIL-E-1B; octal base, resistance element connected to pins 2 and 7; Amperite Co (mfr) part 7H-11; Hazeltine Elec (contr) part 280-1139P1.	Current regulator local oscillator filament
U501		Not used.	

TABLE 8-3. MAINTENANCE PARTS LIST — Cont'd.

REF. DESIG.	NOTES	NAME AND DESCRIPTION	LOCATING FUNCTION
U502	D	RECEIVER-TRANSMITTER SUBASSEMBLY: c/o various electrical parts including 1 MIL type 5654 electron tube and 2 type UG-625/U connectors; approx 3-3/8 in. lg by 2-5/16 in. w by 3-7/32 in. h overall; 2 mtg holes 0.221 in. dia on 2-3/4 in. mtg centers; Hazeltine Elec (mfr and contr) part 1588-5052G1.	Coho preamplifier
V201 thru V221		Not used.	
V222		ELECTRON TUBE: glass envelope; receiving triode; Spec MIL-E-1B, type 5842; Hazeltine Elec (contr) part 5842.	Intermediate frequency preamplifier input and 1st amplifier
V223		Same as V222.	2nd intermediate frequency amplifier
V224		ELECTRON TUBE: glass envelope; sharp cut-off rf pentode Spec MIL-E-1C, type 5654/6AK5W; Hazeltine Elec (contr) part 5654/6AK5W.	3rd intermediate frequency amplifier
V225		Same as V224.	4th intermediate frequency amplifier
V501		ELECTRON TUBE: glass envelope; rectifier; Spec MIL-E-1B, type 1Z2; Hazeltine Elec (contr) part 1Z2.	Rectifier keep alive supply
V502		ELECTRON TUBE: glass envelope, magnetron; Spec MIL-E-1B, type 5J26; Hazeltine Elec (contr) part 5J26.	Magnetron
V503		ELECTRON TUBE: glass envelope; duplexing tube; type 6322; Hazeltine Elec (contr) part 6322.	Duplexing tube
V504		Same as V503.	Duplexing tube
V505		ELECTRON TUBE: glass envelope; uhf triode; Spec MIL-E-1B, type 2C40; Hazeltine Elec (contr) part 2C40.	Local oscillator amplifier
V506		Same as V224.	Coho preamplifier
W501	D	CABLE ASSEMBLY, RADIO FREQUENCY: coaxial; 53.5 ohms impedance; inner conductor no. 20 AWG solid plain copper wire, solid cable core, polyethylene dielectric; outer conductor single braid tinned copper, synthetic resin jacket; cable type RG-58A/U; 1 ft 6-1/2 in. lg over-all, approx 1 ft 4-5/16 in. lg excluding terminations, 0.20 in. dia cross-section of cable; 1 type UG-88/U plug ea end; Hazeltine Elec (mfr and contr) part 1588-5048G1; (incl P510, P517 and W512).	Connects local oscillator to coho mixer
W502	D	CABLE ASSEMBLY, RADIO FREQUENCY: coaxial; 53.5 ohms impedance; inner conductor no. 20 AWG solid plain copper wire, solid cable core, polyethylene dielectric; outer conductor single braid tinned copper, synthetic resin jacket; cable type RG-62A/U; 1 ft 1 in. lg over-all, approx 10-13/16 in. lg excluding terminations; 0.20 in. dia cross-section of cable; 1 type UG-88/U plug ea end; Hazeltine Elec (mfr and contr) part 1588-5048G3; (incl P224, P512 and W513).	Connects signal mixer to receiver input
W503	D	CABLE ASSEMBLY, RADIO FREQUENCY: coaxial; 53.5 ohms impedance; inner conductor no. 20 AWG solid plain copper wire, solid cable core, polyethylene dielectric; outer conductor single braid tinned copper, synthetic resin jacket; cable type RG-58A/U; 8-3/8 in. lg over-all, approx 6-3/16 in. lg excluding terminations, 0.20 in. dia cross-section of cable; 1 type UG-88/U plug ea end; Hazeltine Elec (mfr and contr) part 1588-5048G8; (incl P513, P514 and W512).	Connects RF503A to Z509

TABLE 8-3. MAINTENANCE PARTS LIST — Cont'd.

REF. DESIG.	NOTES	NAME AND DESCRIPTION	LOCATING FUNCTION
W504	D	CABLE ASSEMBLY, RADIO FREQUENCY: coaxial; 53.5 ohms impedance; inner conductor no. 20 AWG solid plain, copper wire, solid cable core, polyethylene dielectric; outer conductor single braid tinned copper, synthetic resin jacket; cable type RG-58A/U; 2 ft 5 in. lg over-all, approx 2 ft 2-13/16 in. lg excluding terminations, 0.20 in. dia cross-section of cable; 1 type UG-88/U plug ea end; Hazeltine Elec (mfr and contr) part 1588-5048G2; (incl P515, P518 and W512).	Connects local oscillator to duplexer
W505 and W506		Not used.	
W507	D	CABLE ASSEMBLY, RADIO FREQUENCY: coaxial; 73 ohms impedance; inner conductor no. 22 AWG copper covered steel wire, solid cable core, polyethylene dielectric; outer conductor single braid plain copper, synthetic resin jacket; cable type RG-59A/U; 8-3/4 in. lg over-all, approx 6-9/16 in. lg excluding terminations, 0.25 in. dia cross-section of cable; 1 type UG-88/U plug ea end; Hazeltine Elec (mfr and contr) part 1588-5048G4; (incl P511, P521 and W511).	Connects coho preamplifier to coho mixer
W508	C	BUS BAR: brass; cross-sectional rectangular shape; solid cross-sectional dim., 1/2 in. w by 0.080 in. thk over-all; right angle shape, 1 leg 2-9/16 in. lg, other leg 2-1/16 in. lg; Hazeltine Elec (mfr and contr) part 1588-1052P1.	For T502
W509	D	CABLE ASSEMBLY, RADIO FREQUENCY: coaxial; 52.5 ohms impedance; inner conductor no. 16 AWG solid plain wire, solid cable core, polyethylene dielectric; outer conductor double braid plain copper, synthetic resin jacket; cable type RG-5B/U; approx 22 in. lg over-all, approx 20 in. lg excluding termination, 0.34 in. dia cross-section of cable; type UG-18B/U plug 1 end; Hazeltine Elec (mfr and contr) part 1588-5048G9; (incl J501, P504 and W510).	
W510		CABLE, RADIO FREQUENCY: coaxial; 50 ohms nom impedance; 28.5 $\mu\mu$f/ft; 3000 v rms; inner conductor no. 16 AWG solid silver coated copper wire; outer conductor double braid, no. 34 AWG silver coated copper wire, 0.264 in. max od; stabilized polyethylene dielectric, 0.181 in. nominal od; black synthetic jacket, 0.332 in. nominal od; Spec MIL-C-17B; type RG-5B/U, Hazeltine Elec (contr) part 273-1013P3; (p/o W509; same as W28).	Bulk for spares
W511		CABLE, RADIO FREQUENCY: coaxial; 75 ohms nom impedance; 21 $\mu\mu$f nom capacitance per ft; 2300 v rms max operating voltage; 7000 v rms min dielectric test voltage; one inner conductor, 0.0230 in. dia solid copper covered steel wire; solid polyethylene dielectric; single braid copper outer conductor; low temperature noncontaminating synthetic resin jacket; 0.242 in. dia over-all; Spec MIL-C-17B, type RG-59A/U; Hazeltine Elec (contr) part 273-1023P2; (p/o W507).	Bulk for spares
W512		CABLE, RADIO FREQUENCY: coaxial; 52 ohms nom impedance; 28.5 $\mu\mu$f nom capacitance per ft; 1900 v rms max operating voltage; 5000 v rms min dielectric test voltage; one inner conductor c/o 19 strands of no. 33 AWG tinned copper wire; solid polyethylene dielectric; single braid tinned copper outer conductor; synthetic resin jacket; 0.195 in. dia over-all; Spec MIL-C-17B, type RG-58A/U; Hazeltine Elec (contr) part 273-1022P2; (p/o W501, W503 and W504).	Bulk for spares

TABLE 8-3. MAINTENANCE PARTS LIST — Cont'd.

REF. DESIG.	NOTES	NAME AND DESCRIPTION	LOCATING FUNCTION
W513		CABLE, RADIO FREQUENCY: coaxial; 93 ohms nom impedance; 13.5 μμf nom capacitance per ft; 750 v rms max operating voltage; 3000 v rms min dielectric test voltage; one inner conductor, 0.0253 in. dia solid copper covered steel wire; air-spaced polyethylene dielectric; single braid copper outer conductor; low-temperature noncontaminating synthetic resin jacket; 0.242 in. dia over-all; Spec MIL-C-17B, type RG-62A/U; Hazeltine Elec (contr) part 273-1027P2; (p/o W502).	Bulk for spares
XI501		LAMPHOLDER: candelabra bayonet base, double contact; brass, nickel plated shell; molded phenolic insulator; 1-13/16 in. lg by 1-3/16 in. w by 1-31/64 in. h over-all; 2 screws at base form contacts for lamp; Culver-Stearns Mfg Co (mfr) part GA14A modified; Hazeltine Elec (contr) part 281-1015P1; (same as XI151).	Holder for I501
XI502		Same as XI501.	Holder for I502
XTY501	B	SOCKET, ELECTRON TUBE: octal configuration; no contacts missing; plastic body; saddle mtg; 1-7/64 in. dia body assembled to oval metal saddle, 1-7/8 in. max lg by 1-3/8 in. max w by approx 11/16 in. h excluding terminals; 2 mtg holes 0.156 in. dia on 1-1/2 in. mtg centers; provisions for mtg electron tube shield not provided; electron tube retaining device not included; Spec MIL-S-28A; type TS101P01; Hazeltine Elec (contr) part TS101P01; (same as XV401).	Socket for TY501
XV201 thru XV221		Not used.	
XV222		SOCKET, ELECTRON TUBE: miniature 9 pin contact configuration; no contacts missing; molded ceramic body; 1 piece saddle top mtg; 1-3/8 in. lg by 0.940 in. w by 25/32 in. h excluding terminals; 2 mtg holes 0.125 in. dia on 1.125 in. mtg centers; w/shield holder; electron tube retaining device not included; Spec MIL-S-28A, type TS103C01; Hazeltine Elec (contr) part 282-1002P1.	Socket for V222
XV223		Same as XV222.	Socket for V223
XV224		SOCKET, ELECTRON TUBE: miniature 7 pin contact configuration; no contacts missing; molded ceramic body; 1 piece saddle, top mtg; 1-1/8 in. max lg by approx 0.800 in. w by 25/32 in. h excluding terminals; 2 mtg holes 1/8 in. dia on 7/8 in. mtg centers; provisions for mtg electron tube shield not provided; electron tube retaining device not included; Spec MIL-S-28A, type TS102C01; Hazeltine Elec (contr) part 282-1001P1.	Socket for V224
XV225		Same as XV224.	Socket for V225
XV501	B	SOCKET, ELECTRON TUBE: miniature 7 pin contact configuration; no contacts missing; low loss phenolic body; saddle mtg; body 1 in. dia by 1-5/32 in. lg excluding terminals; w/oval mtg flange 1-15/16 in. lg by 1 in. w, 2 mtg inserts no. 6-32 NC-2 in mtg flange 1-1/2 in. between centers; provisions for mtg electron tube shield is provided, screw type; electron tube retaining device not included; Hugh H. Eby (mfr) part 8290; Hazeltine Elec (contr) part 282-1025P1.	Socket for V501
XV502 thru XV504		Not used.	

TABLE 8-3. MAINTENANCE PARTS LIST — Cont'd.

REF. DESIG.	NOTES	NAME AND DESCRIPTION	LOCATING FUNCTION
XV505		SOCKET ASSEMBLY ELECTRON TUBE: c/o 1 octal socket, 1 socket support and attaching hardware; marked "V505, 2C40, and XV505"; Hazeltine Elec (mfr and contr) part 1588-5045G1.	For V505
XV505A		SOCKET, ELECTRON TUBE: octal configuration; no contacts missing; low loss composition body; saddle mtg; body 1-7/64 in. max dia by 1/2 in.; 2 mtg holes 0.156 in. dia on 1-1/2 in. mtg centers; provisions for mtg electron tube shield not provided, electron tube retaining device not included; Amphenol (mfr) part 77-MIP-8T; Hazeltine Elec (contr) part 282-1003P2; (part of XV505; same as XV101).	For V505
XV506		Same as XV224.	For V506
Z201 thru Z220		Not used.	
Z221	D	AMPLIFIER, INTERMEDIATE FREQUENCY: 60 mc; over-all gain approx 50 db; 50 ohms input impedance, 50 ohms output impedance; ac operating power requirement 6.3 v, 400 cycles, single phase; dc operating power requirement 150 v; 10-11/16 in. lg by 2-13/32 in. w by 3-3/4 in. h over-all; Hazeltine Elec (mfr and contr) part/dwg A-19120.	Amplifier 60 mc intermediate frequency signal
Z501		FILTER, RADIO INTERFERENCE: capacitor and coil pi type; 4 amp, 125 v ac, 300 v dc, attenuation 50 db for from 50 to 150 mc; hermetically sealed metal case; 1-3/4 in. lg by 1-1/4 in. w by 7/8 in. h excluding terminals and mtg lugs; Astron Corp (mfr) type AF-206R; Hazeltine Elec (contr) part 363-1108P1.	Suppressor electrical noise
Z502		Same as Z501.	Suppressor electrical noise
Z503		Same as Z501.	Suppressor electrical noise
Z504		FILTER, RADIO INTERFERENCE: capacitor and iron core coil type; 1 amp, 400 v dc min attenuation at 0.15 mc 32 db, at 1.2 mc 90 db, at 10 mc 49 db, at 150 mc 50 db; hermetically sealed metal case; 1-3/4 in. lg by 1-1/4 in. w by 7/8 in. h excluding terminals and mtg lugs; Filtron Co (mfr) type FA351; Hazeltine Elec (contr) part 363-1051P1.	Suppressor electrical noise
Z505		Same as Z501.	Suppressor electrical noise
Z506		Same as Z504.	Suppressor electrical noise
Z507		Same as Z501.	Suppressor electrical noise
Z508		Same as Z501.	Suppressor electrical noise
Z509		RECEIVER-TRANSMITTER SUBASSEMBLY: c/o 1 ea Hazeltine part 1588-5025G1 Adapter Assembly, part 1588-5030G1 Crystal Holder, 1588-5029 Filter Assembly; irregular shape; approx 8-1/8 in. lg by 4 in. w by 4 in. h over-all; 4-7/32 in. dia mtg holes on 2-1/4 by 4-3/4 in. mtg centers; marked "Z509, CR503, J513 and J512"; Hazeltine Elec (mfr and contr) part 1588-5031G1.	Harmonic filter

TABLE 8-3. MAINTENANCE PARTS LIST — Cont'd.

REF. DESIG.	NOTES	NAME AND DESCRIPTION	LOCATING FUNCTION
Z510	D	SWITCH ASSEMBLY THERMOSTATIC: c/o 1 ea Hazeltine part 271-1090P1 (S501) Thermostatic Switch and part 1588-1126G1 (A512), 4 ea part 1588-1125P1 (O584) Spring and part 1588-1124P1 (MP511) Bushing; approx 3-5/16 in. lg by 2-5/16 in. w by 1-1/2 in. deep over-all; Hazeltine Elec (mfr and contr) part 1588-5024G1.	Magnetron oven temperature control
Z511		RECEIVER-TRANSMITTER SUBASSEMBLY: includes tuned cavity assembly w/MIL type 2C40 electron tube, Hazeltine part 1588-5039G1 Variable Resistor Drive Assembly, 2 connectors type UG-625/U; irregular shape; approx 14-3/8 in. lg over-all; Hazeltine Elec (mfr and contr) part 1588-5043G1.	Local oscillator

TABLE 8-3. MAINTENANCE PARTS LIST — Cont'd.

REF. DESIG.	NOTES	NAME AND DESCRIPTION	LOCATING FUNCTION
301-399 1301-1399 2301-2399 3301-3399 Series	E	SIGNAL COMPARATOR: Army-Navy Signal Comparator, CM-36A/TPS-1D; Hazeltine Elec (mfr and contr) part/dwg A-18922; Navy Spec MIL-R-0015895D(SHIPS) and Amendment 2.	
A301	C	COVER, CASE, SIGNAL COMPARATOR: aluminum, alodine and USMC green paint finish; approx 24 in. lg by 19-1/2 in. w by 1-1/4 in. h over-all; 22 mtg holes no. 1/4 in. -20 thd and 2 mtg holes 0.386 in. dia symmetrically spaced around edges; Hazeltine Elec (mfr and contr) part 1620-1021G1.	Cover for A305
A302		MOUNT, RESILIENT: sq base cup mtg; 18 to 53 lb load rating; 3 in. lg by 3 in. w by 1-1/2 in. h over-all; natural rubber compression cup type; cushion 2-7/8 in. dia by 3/4 in. thk; steel sleeve w/3/8 in. -16 NC-2 hole; steel cup type holder, cadmium plated; 4 mtg holes 0.266 in. dia on 2-1/2 in. by 2-1/2 in. mtg centers; incl no. 10-24 NC-2 hole on side of bell and braided ground strap fastened to bell approx 4 in. lg by 1/2 in. w w/lug on free end for 1/4 in. screw; The Barry Corp (mfr) part Z2020-T6; Hazeltine Elec (contr) part 344-1009P1.	For unit inner case
A303	C	TERMINAL BOX: brass box, cadmium plated and water dip lacquer finish; 1-5/8 in. lg by 1-5/8 in. w by 1-1/4 in. h over-all; incl one turret type terminal and one hermetically sealed terminal; Hazeltine Elec (mfr and contr) part 1590-1071G1.	For Z2350
A304	F	COVER, TERMINAL BOX: 1-5/8 in. lg by 1-5/8 in. w by 0.050 in. thk; four 0.144 in. dia mtg holes on 1-1/16 in. by 1-1/16 in. mtg centers Hazeltine Elec (mfr and contr) part 1590-1070P1.	For Z2350
A305	C	CASE, SIGNAL COMPARATOR: aluminum alloy; alodine and USMC green paint finish; approx 23-1/2 in. lg by 24 in. w by 20 in. h; incloses one Signal Comparator, JCENS type CM-36A/TPS-1D; Hazeltine Elec (mfr and contr) part A18917G1.	Unit outer case
A306	C	DOOR, ACCESS, VARIABLE RESISTOR: c/o aluminum alloy hinge spot welded to aluminum alloy door, alodine and USMC green paint finish; sponge rubber gasket cemented to rear of door; approx 10-5/8 in. lg by 2-31/64 in. w by 27/64 in. h over-all; five 0.144 in. dia mtg holes spaced 2.484 in. c to c in hinge; incl two no. 10-24 NC-2 thd holes spaced 8.062 in. c to c in door to accommodate captive screws; Hazeltine Elec (mfr and contr) part A18879.	Access door for R2350, R2351, R2352, R2353, R2354, R2355, R2356 and R3328
A2350 thru A2352		Not used.	
A2353	F	BRACKET, DOUBLE ANGLE: switch support; 0.104 in. thk aluminum, alodine finish; 2-3/16 in. lg by 1-5/16 in. w by 1 in. h over-all; two 0.169 in. dia holes in one leg spaced 13/16 in. c to c and two slots 0.331 in. lg by 0.169 in. w spaced 13/16 in. c to c in other leg; Hazeltine Elec (mfr and contr) part 1590-1094P1.	Mounting for S2355
A2354	F	BRACKET, ANGLE: for thermostatic switch; 0.031 in. thk aluminum, anodized; "U" shaped, 1-9/16 in. lg by 3/8 in. w by 11/32 in. h over-all; 3 mtg holes, two 0.169 in. dia on 5/32 in. dia located in center; Hazeltine Elec (mfr and contr) part 1592-1079P1; (same as A112).	For S2351 and S2352

TABLE 8-3. MAINTENANCE PARTS LIST — Cont'd.

REF. DESIG.	NOTES	NAME AND DESCRIPTION	LOCATING FUNCTION
A2355	F	MOUNTING MOTOR: stainless steel, passivated finish; cylindrical shape; 5-11/16 in. od by 13/16 in. h over-all; 4 mtg holes 0.169 in. dia equally spaced on 5 in. dia circle; Hazeltine Elec (mfr and contr) part 1590-1092G1; (same as A425).	For B2350
A2356		Not used.	
A2357	F	BRACKET, ANGLE: aluminum 0.122 in. thk per Navy Spec 47A11, Condition 1/4 h; alodine finish; "L" shape ea leg 1 in. lg by 3/4 in. w; two 0.169 in. dia holes diagonally spaced on 3/8 in. by 3/8 in. centers in one leg; other leg w/4 holes 0.128 in. dia on 1/2 in. by 1/2 in. centers w/one 15/32 in. dia centrally located hole, both corners rounded on 1/16 in. radius; Hazeltine Elec (mfr and contr) part 1590-1068P1.	For J1350
B2350		MOTOR, ALTERNATING CURRENT: capacitor start induction type; 115 v ac, 400 cycles, single phase, 0.65 amp, approx 65% power factor; 1/50 hp single take-off, 6500 rpm, reversible rotation; -54 deg C to +65 deg C ambient; 2-23/32 in. lg excluding shaft by 1-3/4 in. dia, 1/4 in. dia shaft, incl ball bearing; Eastern Air Devices (mfr) part J33D modified; Hazeltine Elec (contr) part 315-1034P2; (same as B401).	B2350 motor
B2350A		FAN, VANEAXIAL: one stage; 4 in. od; 4 blades; aluminum, finish per Eastern Air Devices Spec no. PS10; ccw rotation as viewed facing the driving side; Eastern Air Devices Inc (mfr) part 2234-4C-2; Hazeltine Elec (contr) part 315-1034P3; (same as B401A).	B2350 fan
C301		CAPACITOR, FIXED, CERAMIC DIELECTRIC: 500 v dc working, 1500 $\mu\mu$f, ±20%; variable temp coef; uninsulated body; 5/8 in. max lg by 1/4 in. max w across hex flats; Centralab (mfr) type DA790; Hazeltine Elec (contr) part 235-1020P8; (same as C222).	V301 screen grid bypass
C302		CAPACITOR, FIXED, CERAMIC DIELECTRIC: 500 v dc working, 51 $\mu\mu$f, ±5%; 47 $\mu\mu$f per μf per deg C neg temp coef, +120 $\mu\mu$f per μf per deg C tolerance; insulated body, case 0.250 in. od by 0.562 in. lg; Spec JAN-C-20A, JAN type CC21UJ470J; Hazeltine Elec (contr) part 235-1186P39.	V301 grid coupling
C303		Same as C301.	V301 grid decoupling
C304		Same as C301.	V301 heater bypass
C305		CAPACITOR, VARIABLE, CERAMIC DIELECTRIC: rotary type; single reaction, 4.5 to 25 $\mu\mu$f; 500 v dc; 27/32 in. deep by 41/64 in. w by 13/32 in. h; Spec JAN-C-81-1; Hazeltine Elec (contr) part 235-1014P6.	V302 grid tuning
C306	B	CAPACITOR, FIXED, MICA DIELECTRIC: 500 v dc working, 1000 v peak working, 27 $\mu\mu$f, ±10%; low loss plastic case, 47/64 in. w by 7/16 in. h by 3/16 in. deep; Spec MIL-C-5A, MIL type CM20B270K; Hazeltine Elec (contr) part 235-1005P11.	V302 grid tuning
C307		CAPACITOR, FIXED, CERAMIC DIELECTRIC: 500 v dc working, 470 $\mu\mu$f, ±20%; variable temp coef; uninsulated body, 5/8 in. max lg by 1/4 in. max w across hex flats; Centralab (mfr) type DA790; Hazeltine Elec (contr) part 235-1020P5.	V301 cathode bypass

TABLE 8-3. MAINTENANCE PARTS LIST — Cont'd.

REF. DESIG.	NOTES	NAME AND DESCRIPTION	LOCATING FUNCTION
C308		Same as C302.	V301 plate coupling
C309		Same as C301.	V302 screen grid bypass
C310		CAPACITOR, FIXED, CERAMIC DIELECTRIC: 500 v dc working, 4700 μμf, ±20%; variable temp coef; 13/16 in. lg by 5/16 in. w across flats over-all; 1 radial wire lead term; 1 side internal ground to mtg end, mtg hole no. 2-56 NC-2 in. 1 end; uninsulated; Central Radio Lab (mfr) type DA791; Hazeltine Elec (contr) part 235-1021P2.	V302 cathode bypass
C311		Same as C301.	V302 heater bypass
C312		Same as C302.	V302 plate coupling
C313		Same as C301.	V303 screen grid bypass
C314		Same as C301.	V303 grid decoupling
C315		Same as C307.	V303 cathode bypass
C316		Same as C301.	V303 heater bypass
C317		Same as C302.	V303 plate coupling
C318		Same as C301.	V304 grid decoupling
C319		Same as C301.	V304 screen grid bypass
C320		Same as C307.	V304 cathode bypass
C321		Same as C301.	V304 heater bypass
C322		Same as C302.	V304 plate coupling
C323		Same as C301.	V305 grid decoupling
C324		Same as C301.	V305 screen grid bypass
C325		Same as C307.	V305 cathode bypass
C326		Same as C301.	V305 heater bypass
C327		Same as C302.	V305 plate coupling
C328		Same as C301.	V306 grid decoupling
C329		Same as C301.	V306 screen grid bypass
C330		Same as C307.	V306 cathode bypass
C331		Same as C301.	V306 heater bypass

TABLE 8-3. MAINTENANCE PARTS LIST — Cont'd.

REF. DESIG.	NOTES	NAME AND DESCRIPTION	LOCATING FUNCTION
C332	B	CAPACITOR, FIXED, CERAMIC DIELECTRIC: 500 v dc working, 6 μμf, ±0.5 μμf; 330 μμf per μf per deg C neg temp coef, +60 μμf per μf per deg C tolerance; insulated body, case 0.250 in. od by 0.562 in. lg; Spec JAN-C-20A, JAN type CC21SH060D; Hazeltine Elec (contr) part 235-1186P7.	T302 primary tuning
C333	B	CAPACITOR, FIXED, CERAMIC DIELECTRIC: 500 v dc working, 10 μμf, ±0.5 μμf; zero temp coef, +60 -110 μμf per μf per deg C tolerance; insulated body, case 0.250 in. od by 0.562 in. lg; Spec JAN-C-20A, JAN type CC21CH100D; Hazeltine Elec (contr) part 235-1186P21.	T301 secondary tuning
C334	B	CAPACITOR, FIXED, CERAMIC DIELECTRIC: 500 v dc working, 22 μμf, ±5%; 330 μμf per μf per deg C neg temp coef, +60 μμf per μf per deg C tolerance; insulated body, case 0.250 in. od by 0.562 in. lg; Spec JAN type CC21SH220J; Hazeltine Elec (contr) part 235-1186P34.	CR301 output bypass
C335		Same as C334.	CR302 output bypass
C336		Same as C301.	V307 screen bypass
C337		Same as C310.	V307 cathode bypass
C338		Same as C301.	Heater decoupling V307
C339	B	CAPACITOR, FIXED, MICA DIELECTRIC: 500 v dc working, 1000 v peak working, 470 μμf, ±10%; low loss plastic case, 47/64 in. w by 7/16 in. h by 3/16 in. deep; Spec MIL-C-5A, MIL type CM20B471K; Hazeltine Elec (contr) part 235-1005P80; (same as C111).	V307 plate coupling
C340		Same as C301.	+150 volt decoupling
C341		Same as C301.	Noise meter bypass
C342		Same as C301.	Gain control decoupling
C343 thru C349		Not used.	
C350		Same as C301.	V350 screen grid bypass
C351		Same as C307.	V350 cathode bypass
C352		Same as C302.	V350 plate coupling
C353		Same as C301.	V351 screen grid bypass
C354		Same as C307.	V351 cathode bypass
C355		Same as C302.	V351 plate coupling
C356		Same as C301.	V352 screen grid bypass
C357		Same as C307.	V352 cathode bypass

TABLE 8-3. MAINTENANCE PARTS LIST — Cont'd.

REF. DESIG.	NOTES	NAME AND DESCRIPTION	LOCATING FUNCTION
C358		Same as C301.	V352 heater bypass
C359		Same as C302.	V352 plate coupling
C360		Same as C306.	V353 grid tuning
C361		Same as C305.	V353 grid tuning
C362		Same as C302.	V353 grid decoupling
C363		Same as C302.	V353 plate coupling
C364		Same as C301.	V353 screen grid bypass
C365		Same as C301.	V354 screen grid bypass
C366		Same as C307.	V354 cathode bypass
C367		Same as C339.	V354 plate coupling
C368		Same as C301.	+150 decoupling
C369		Same as C301.	KC decoupling
C370		Same as C301.	LC decoupling
C371		Same as C301.	V353 heater bypass
C372		Same as C301.	V354 heater bypass
C373		Same as C301.	Heater decoupling
C374		Same as C333.	T302 secondary tuning
C375		CAPACITOR, FIXED, CERAMIC DIELECTRIC: 500 v dc working, 7 $\mu\mu$f ±5%; insulated body, case 0.250 in. od by 0.562 in. lg JAN-C-20A, JAN type CC21UJ070D; Hazeltine Elec (contr) part 235-1186P12.	V308 control grid coupling
C376		Same as C334.	CR304 output bypass
C377		Same as C301.	V308 screen grid bypass
C378		Same as C332.	T301 primary tuning
C379		Same as C307.	V308 cathode bypass
C380		Same as C301.	V308 heater bypass
C1301		Same as C310.	V1301 screen grid bypass
C1302		Same as C310.	V1301 cathode bypass
C1303		Same as C310.	V1301 grid decoupling
C1304		Same as C310.	V1301 heater bypass

TABLE 8-3. MAINTENANCE PARTS LIST — Cont'd.

REF. DESIG.	NOTES	NAME AND DESCRIPTION	LOCATING FUNCTION
C1305		Same as C310.	V1302 screen grid bypass
C1306		Same as C302.	V1301 plate decoupling
C1307		Same as C310.	V1302 grid decoupling
C1308		Same as C310.	V1302 heater bypass
C1309		Same as C310.	V1303 screen grid bypass
C1310		Same as C302.	V1302 plate coupling
C1311		Same as C310.	V1302 cathode bypass
C1312		Same as C310.	V1303 grid decoupling
C1313		Same as C310.	V1304 screen grid bypass
C1314		Same as C302.	V1303 plate coupling
C1315		Same as C310.	V1303 cathode bypass
C1316		Same as C310.	V1304 grid decoupling
C1317		Same as C310.	V1303 heater bypass
C1318		Same as C310.	V1305 screen grid bypass
C1319		Same as C302.	V1304 plate coupling
C1320		Same as C310.	V1304 cathode bypass
C1321		Same as C310.	V1304 heater bypass
C1322		Same as C310.	V1305 cathode bypass
C1323		Same as C310.	V1305 heater bypass
C1324		Same as C333.	T1301 secondary tuning
C1325		Same as C310.	V1306 heater bypass
C1326		Same as C302.	V1306 diode output bypass
C1327		Same as C302.	V1306 diode output filter
C1328		Same as C310.	+150 volt decoupling
C1329		Same as C310.	Gain control decoupling
C1330		Same as C310.	Heater decoupling

TABLE 8-3. MAINTENANCE PARTS LIST — Cont'd.

REF. DESIG.	NOTES	NAME AND DESCRIPTION	LOCATING FUNCTION
C1331 thru C1349		Not used.	
C1350	B	CAPACITOR, FIXED, MICA DIELECTRIC: 500 v dc working, 1000 v peak working, 270 μμf, ±10%; low loss plastic case, 47/64 in. w by 7/16 in. h by 3/16 in. deep; Spec MIL-C-5A, MIL type CM20B271K; Hazeltine Elec (contr) part 235-1005P65; (same as C104).	V1350 grid coupling
C1351		Same as C310.	V1350 heater bypass
C1352		Same as C310.	V1350 screen bypass
C1353		CAPACITOR, VARIABLE, CERAMIC DIELECTRIC: rotary type, -500 μμf per μf per deg C temp coef; 7.0 μμf min, 45.0 μμf max capacity, 500 v dc working, 41/64 in. w by 27/32 in. deep by 13/32 in. max h; Spec JAN-C-81, JAN type CV11C450; Hazeltine Elec (contr) part 235-1014P3; (same as C240).	V1350 coarse timing
C1354		Same as C1350.	V1351 grid coupling
C1355		Same as C310.	V1351 cathode bypass
C1356		Same as C310.	V1351 heater bypass
C1357		Same as C1350.	V1355 cathode bypass
C1358	B	CAPACITOR, FIXED, MICA DIELECTRIC: 300 v dc working, 600 v peak working, 10,000 μμf, +10%; low loss plastic case, 51/64 in. w by 51/64 in. h by 5/16 in. deep; Spec MIL-C-5A, MIL type CM35B103K; Hazeltine Elec (contr) part 235-1008P79; (same as C535).	V1352 cathode bypass
C1359		Same as C310.	V1352 heater bypass
C1360		Same as C1358.	V1352 plate coupling
C1361		Same as C1358.	V1351 plate coupling
C1362		Same as C339.	V1352 grid coupling
C1363	B	CAPACITOR, FIXED, MICA DIELECTRIC: 500 v dc working, 1000 v peak working, 330 μμf, ±10%; low loss plastic case, 47/64 in. w by 7/16 in. h by 3/16 in. deep; Spec MIL-C-5A, MIL type CM20B331K; Hazeltine Elec (contr) part 235-1005P70.	V1353 cathode tuning
C1364		Same as C310.	V1353 heater bypass
C1365	B	CAPACITOR, FIXED, MICA DIELECTRIC: 500 v dc working, 1000 v peak working, 1500 μμf, ±10%; low loss plastic case, 51/64 in. w by 51/64 in. h by 1/4 in. deep; Spec MIL-C-5A, MIL type CM30B152K; Hazeltine Elec (contr) part 235-1008P28.	V1353 plate coupling
C1366		Same as C1365.	V1353 grid coupling
C1367		CAPACITOR, FIXED, PAPER DIELECTRIC: 2 sections, ea section 600 v dc working, 500,000 μμf, +20% -10%, 450,000 μμf to 600,000 μμf capacity range; hermetically sealed metal case, uninsulated, case 2-3/4 in. h by 1-5/16 in. w by 0.766 in. max deep; Spec MIL-C-25A, MIL type CP61B6EF504V; Hazeltine Elec (contr) part 235-1077P7.	Consists of C1367A and C1367B

TABLE 8-3. MAINTENANCE PARTS LIST — Cont'd.

REF. DESIG.	NOTES	NAME AND DESCRIPTION	LOCATING FUNCTION
C1367A	E	Part of C1367; for reference only.	V1351 screen bypass
C1367B	E	Part of C1367; for reference only.	V1354 plate decoupling
C1368		Same as C302.	V1354 plate coupling
C1369		Same as C310.	V1354 heater bypass
C1370		Same as C1358.	V1354 plate decoupling
C1371		Same as C1358.	V1355 grid coupling
C1372		Same as C333.	V1355 grid decoupling
C1373		Same as C302.	V1355 plate coupling
C1374		Same as C310.	V1355 screen bypass
C1375		Same as C1367.	Consists of C1375A and C1375B
C1375A	E	Part of C1375; for reference only.	V1355 screen bypass
C1375B	E	Part of C1375; for reference only.	V1355 screen bypass
C1376		Same as C310.	V1355 heater bypass
C1377		Same as C310.	V1356 cathode bypass
C1378		Same as C302.	V1356 plate coupling
C1379		Same as C310.	V1356 cathode decoupling
C1380		Same as C310.	V1356 heater bypass
C1381		Same as C302.	V1357 plate coupling
C1382		Same as C310.	V1357 screen bypass
C1383		Same as C310.	V1357 cathode bypass
C1384		Same as C310.	V1357 heater bypass
C1385		Same as C310.	CR1350 output filter
C1386		Same as C310.	+150 decoupling
C1387		Same as C310.	V1355 plate decoupling
C1388		Same as C310.	V1356 screen bypass
C2301		Same as C302.	V2301 grid coupling
C2302		Same as C310.	V2301 screen bypass
C2303		Same as C310.	V2301 grid decoupling
C2304		Same as C310.	V2301 cathode bypass
C2305		Same as C302.	V2301 plate coupling

TABLE 8-3. MAINTENANCE PARTS LIST — Cont'd.

REF. DESIG.	NOTES	NAME AND DESCRIPTION	LOCATING FUNCTION
C2306		Same as C310.	V2301 heater bypass
C2307		Same as C310.	V2302 screen bypass
C2308		Same as C310.	V2302 grid decoupling
C2309		Same as C310.	V2302 cathode bypass
C2310		Same as C302.	V2302 plate coupling
C2311		Same as C310.	V2302 heater bypass
C2312		Same as C310.	V2303 screen bypass
C2313		Same as C310.	V2303 grid decoupling
C2314		Same as C310.	V2303 cathode bypass
C2315		Same as C302.	V2303 plate coupling
C2316		Same as C310.	V2303 heater bypass
C2317		Same as C310.	V2304 screen bypass
C2318		Same as C310.	V2304 grid decoupling
C2319		Same as C310.	V2304 cathode bypass
C2320		Same as C302.	V2304 plate coupling
C2321		Same as C310.	V2304 heater bypass
C2322		Same as C310.	V2305 screen bypass
C2323		Same as C310.	V2305 cathode bypass
C2324		Same as C310.	V2305 heater bypass
C2325		Same as C333.	T2301 secondary tuning
C2326		Same as C310.	V2306 heater bypass
C2327		Same as C302.	V2306 output filter
C2328		Same as C302.	V2306 output filter
C2329		Same as C310.	+150 decoupling
C2330		Same as C310.	Gain control decoupling
C2331		Same as C310.	Heater decoupling
C2332 thru C2349		Not used.	
C2350	B	CAPACITOR, FIXED, PAPER DIELECTRIC: 600 v dc working, 1.0 μf, +20 -10%, 900,000 μμf to 1.2 μf capacity range; hermetically sealed metal case, uninsulated, case 2-3/4 in. h by 1-5/16 in. w by 0.766 in. max deep; Spec MIL-C-25A, MIL type CP61B1EF105V; Hazeltine Elec (contr) part 235-1009P9.	B2350 starting

TABLE 8-3. MAINTENANCE PARTS LIST — Cont'd.

REF. DESIG.	NOTES	NAME AND DESCRIPTION	LOCATING FUNCTION
C2351	B	CAPACITOR, FIXED, CERAMIC DIELECTRIC: 500 v dc working, 39 $\mu\mu$f, ±5%, 750 $\mu\mu$f per μf per deg C neg temp coef, +120 $\mu\mu$f per μf per deg C tolerance; insulated body, case 0.250 in. od by 0.562 in. lg; Spec JAN-C-20A, JAN type CC21UJ390J; Hazeltine Elec (contr) part 235-1186P38.	Z2350 input
C2352		Same as C2351.	Z2350 output
C3300		Same as C1367.	Consists of C3300A and C3300B
C3300A		Part of C3300; for reference only.	V3303 screen grid bypass
C3300B		Part of C3300; for reference only.	V3303 screen grid bypass
C3301		Same as C1367.	Consists of C3301A and C3301B
C3301A		Part of C3301; for reference only.	V3303 cathode bypass
C3301B		Part of C3301; for reference only.	AGC filter
C3302		Same as C1358.	V3303 plate coupling
C3303		Same as C339.	V3304 plate coupling
C3304		Same as C339.	V3304 cathode coupling
C3305	B	CAPACITOR, FIXED, PAPER DIELECTRIC: 600 v dc working, 100,000 $\mu\mu$f, ±20%, 80,000 to 120,000 $\mu\mu$f capacity range; hermetically sealed metal case, insulated per Spec MIL-C-25A, 2-1/16 in. lg by 11/16 in. dia; Spec MIL-C-25A, MIL type CP26A1EF104M; Hazeltine Elec (contr) part 235-1123P4.	V3305A plate decoupling
C3306		Same as C1358.	V3306 grid coupling
C3307		Same as C1358.	V3311B grid coupling
C3308		CAPACITOR, FIXED, PAPER DIELECTRIC: 0.47 μf, ±10%; 400 v dc working; 15/16 in. lg by 0.463 in. od; two axial wire leads; Spec MIL-C-25A, MIL type CP05A1EE474K; Hazeltine Elec (contr) part CP05A1EE474K.	CR3302 cathode coupling
C3309		Same as C3305.	V3309 grid coupling
C3310		Same as C1358.	V3305A grid coupling
C3311		Same as C1358.	V3301 grid bypass
C3312		CAPACITOR, FIXED, PAPER DIELECTRIC: 0.22 μf, ±10%; 400 v dc working; 1-7/16 in. lg by 0.625 in. od; two axial wire leads; Spec MIL-C-25A, MIL type CP05A1EE224K; Hazeltine Elec (contr) part CP05A1EE224K.	V3305B plate decoupling

TABLE 8-3. MAINTENANCE PARTS LIST — Cont'd.

REF. DESIG.	NOTES	NAME AND DESCRIPTION	LOCATING FUNCTION
C3313		CAPACITOR, FIXED, MICA DIELECTRIC: 500 v dc working; 10,000 μμf; -100 to +200 parts per million per deg C temp coef; plastic case; 51/64 in. h by 5/16 in. deep; Spec MIL-C-5A, MIL type CM35D103G; Hazeltine Elec (contr) part 235-1008P77.	V3307 grid coupling
C3314	B	CAPACITOR, FIXED, MICA DIELECTRIC: 500 v dc working, 1000 v peak working, 1500 μμf, +10%; low loss plastic case, 51/64 in. w by 51/64 in. h by 1/4 in. deep; Spec MIL-C-5A, MIL type CM30B152K; Hazeltine Elec (contr) part CM30B152K.	V3310 cathode coupling
C3315	B	CAPACITOR, FIXED, MICA DIELECTRIC: 300 v dc working, 600 v peak working, 820 μμf, ±10%; low loss plastic case, 47/64 in. w by 7/16 in. h by 3/16 in. deep; Spec MIL-C-5A, MIL type CM20B821K; Hazeltine Elec (contr) part 235-1005P95.	V3312 grid coupling
C3316	B	CAPACITOR, FIXED, MICA DIELECTRIC: 500 v dc working, 1000 v peak working, 560 μμf, ±10%; low-loss plastic case, 47/64 in. w by 7/16 in. h by 3/16 in. deep; Spec MIL-C-5A, MIL type CM20B561K; Hazeltine Elec (contr) part 235-1005P85.	V3312 screen grid coupling
C3317		Not used.	
C3318	B	CAPACITOR, FIXED, MICA DIELECTRIC: 500 v dc working, 1000 v peak working, 22 μμf, ±10%; low loss plastic case, 47/64 in. w by 7/16 in. h by 3/16 in. deep; Spec MIL-C-5A, MIL type CM20B220K; Hazeltine Elec (contr) part 235-1005P40.	V3306 suppressor grid coupling
C3319		Same as C3313.	V3305B grid coupling
C3320		Same as C3316.	Cathode bypass for V3311B
CR301		SEMI-CONDUCTOR DEVICE, DIODE: germanium type; body 0.300 in. lg max by 0.140 in. dia max; 2 tinned axial wire lead terminals, ea 1 in. lg; Spec MIL-E-1C, JAN type 1N127; Hazeltine Elec (contr) part 1N127.	IF detector
CR302		Same as CR301.	IF detector
CR303		Same as CR301.	Noise meter rectifier
CR304		Same as CR301.	IF detector
CR1301 thru CR1349		Not used.	
CR1350		Same as CR301.	Carrier rectifier
CR3300		Same as CR301.	Full wave video rectifier
CR3301		Same as CR301.	Full wave video rectifier
CR3302		Same as CR301.	V3311B limiter
CR3303		Same as CR301.	V3311B limiter
CR3304		Same as CR301.	V3310 trigger input
CR3305		Same as CR301.	V3311A clamping diode

TABLE 8-3. MAINTENANCE PARTS LIST — Cont'd.

REF. DESIG.	NOTES	NAME AND DESCRIPTION	LOCATING FUNCTION
CR3306		Same as CR301.	V3311A clamping diode
CR3307		Same as CR301.	V3305A dc restorer
CR3308		Same as CR301.	V3305B dc restorer
E301 thru E308		Not used.	
E309		TERMINAL, FEEDTHRU, INSULATED: turret type; teflon insulation; brass conductor; solder finish; 0.500 in. lg by 0.172 in. dia over-all; 3000 v rms breakdown voltage at sea level; press fit mtg; Sealectro Corp (mfr) part FT-SM-1-TUR; Hazeltine Elec (contr) part TE-1474.	Component connection
E310		DUMMY CONNECTOR, PLUG: 3 female contacts; one connector mating end; straight shape, 1-13/32 in. lg by 1-1/8 in. od; w/partially inclosing shell; aluminum alloy, corrosion resistant; cable end covered w/ potting compound; incl one MIL type RC20GF105J resistor; Amphenol (mfr) part 97-3106A-1S(438) modified; Hazeltine Elec (contr) part PL-1430.	Adapter for J310
E311		SHIELD, ELECTRON TUBE: accommodates RMA tube envelope T5-1/2; straight cylinder shape w/flared end, open top; 1 opening provided specifically for electrode leads; brass; 1-3/8 in. lg by 0.930 in. w across mtg protrusions; mounts directly on tube; Spec JAN-S-28A, JAN type TS102U01; Hazeltine Elec (contr) part 308-1001P1; (same as E154).	Tube shield
E312		SHIELD, ELECTRON TUBE: accommodates RMA tube envelope style T-5-1/2(6-2); straight cylinder shape w/flared end, open top; 1 opening provided specifically for electrode leads; brass or copper; 1-3/4 in. lg by 0.930 in. w inside mtg bosses; mounts directly on tube; Spec JAN-S-28A, JAN type TS102U02; Hazeltine Elec (contr) part 308-1001P2.	For V1350, V1351, V1354 and V1355
E313		SHIELD, ELECTRON TUBE: accommodates RMA tube envelope style T-5-1/2(6-5); straight cylinder w/flared end, open top; 1 hole provided for electrode leads; copper or brass, nickel plated; 2-1/4 in. lg by 0.930 in. w inside mtg bosses, 0.810 in. min id; mounts on chassis, incl one non-magnetic spring inside top; Spec JAN-S-28A, JAN type TS102U03; Hazeltine Elec (contr) part 308-1001P3.	For V3300 and V3302
E314		SHIELD, ELECTRON TUBE: accommodates RMA tube envelope style T-6-1/2; straight cylinder shape w/flared end, open top; 1 opening provided specifically for electrode leads; brass or copper; 1-15/16 in. lg by 1.065 in. w inside mtg bosses; mounts directly on tube; Spec JAN-S-28A, JAN type TS103U02; Hazeltine Elec (contr) part 308-1002P2; (same as E155).	For V1353, V3301, V3305, V3310 and V3311
E315		SHIELD, ELECTRON TUBE: accommodates RMA tube envelope style T-5-1/2(6-5); straight cylinder shape, split on side, open top; spring temper yellow brass sleeve, copper bracket, brass thumb screw, and steel retaining ring; spprox 2-1/4 in. lg by 1.357 in. w by 0.714 in. h over-all; mounts on chassis by no. 6-32 NC-2 by 5/16 in. deep threaded hole in thumb screw; Hazeltine Elec (mfr and contr) part 1590-5005G1.	For V1305, V1352, V1357 and V2305
E316	C	TERMINAL, STUD: 59/64 in. lg by 5/16 in. w across hex flats over-all; hex base insulated from conductor connection, 4000 v rms breakdown voltage; Cambridge Thermionic Corp (mfr) part X1995-C modified; Hazeltine Elec (contr) part 227-1027P3; (same as E258).	Component connection

TABLE 8-3. MAINTENANCE PARTS LIST — Cont'd.

REF. DESIG.	NOTES	NAME AND DESCRIPTION	LOCATING FUNCTION
E317	C	TERMINAL, STUD: 23/32 in. lg by 1/4 in. w across hex flats over-all; 1/4 in. w hex base, uninsulated; brass, silver plated; Hazeltine Elec (mfr and contr) part 227-1050P2; (same as E222).	Component connection
E318	A	INSULATOR, PLATE: rectangular, laminated paper base plastic, 1-1/2 in. lg by 1 in. w by 1/32 in. thk; 1 center mtg hole 7/16 in. dia located 1/2 in. from 1 end; min fungus nutrient properties; u/w AB type J, 2 w variable resistor; Hazeltine Elec (mfr and contr) part 221-1002P2; (same as E108).	For potentiometer mounting
E319	C	TERMINAL, STUD: 1-3/64 in. lg by 5/16 in. w across hex flats over-all; hex base insulated from conductor connection, 4000 v rms breakdown voltage; Cambridge Thermionic Corp (mfr) part X1995-D modified; Hazeltine Elec (contr) part 227-1027P4.	Component connections
E320		PLATE, ELECTRICAL GROUNDING: phosphor bronze; silver plated; saddle shape w/protruding solder lug; 1-1/8 in. lg by 0.823 in. w by 0.430 in. h over-all; 2 mtg holes 0.125 in. dia on 0.875 in. mtg/c; center hole 0.630 in. dia; Hazeltine Elec (mfr and contr) part 224-1004P1.	For V1301 thru V1325
E2350		Not used.	
E2351	B	TERMINAL BOARD: molded mineral filled phenolic board, Spec MIL-P-14A, type MFE; incl 3 double screw angle type solder lug terminals; barrier type; 1-3/4 in. lg by 7/8 in. w by 13/32 in. h over-all excluding terminals; Hazeltine Elec (mfr and contr) part 247-1014G66.	B2350 junction
E2352 thru E2354		Not used.	
E2355	A	INSULATOR, PLATE: rectangular; plastic; 1-13/16 in. lg by 1-1/8 in. w by 1/32 in. thk over-all; 4 mtg holes 5/32 in. dia on 1-1/2 in. by 5/16 in. mtg centers; incl 3 clearance holes 7/32 in. dia spaced 3/8 in. c to c on 3/4 in. mtg centers; Hazeltine Elec (mfr and contr) part 221-1008P3.	Backing plate for E2351
E2356		KNOB: set screw type; 1.344 in. max lg by 0.912 in. max w by 0.978 in. max h; black Tenite II body, matte finish; Hazeltine Elec (mfr and contr) part 231-1058G5.	Knob for S2353
E2357		Not used.	
E2358	F	SPRING, GROUNDING: 0.005 in. thk stainless steel, passivated finish; 12-7/8 in. lg by 1-5/16 in. w by 3/16 in. h over-all; 4 mtg holes 0.221 in. dia spaced 3-7/8 in. between mtg centers; incl 2 cutouts on 5/8 in. radius by 5/16 in. deep on top edge on 5 in. centers; Hazeltine Elec (mfr and contr) part 1590-1096P1.	Front panel grounding spring
E2359	F	SPRING, GROUNDING: 0.005 in. thk stainless steel, passivated finish; 18 in. lg by 1 in. w by 3/16 in. h over-all; 6 mtg holes 0.144 in. dia unequally spaced along upper part of spring; incl 2 cutouts on 7/32 in. radius by 3/32 in. deep spaced 2-5/8 in. c to c on top edge, and 4 cutouts on 3/8 in. radius by 1/8 in. deep unequally spaced on bottom edge; Hazeltine Elec (mfr and contr) part 1590-1098P1.	Front panel grounding spring

TABLE 8-3. MAINTENANCE PARTS LIST — Cont'd.

REF. DESIG.	NOTES	NAME AND DESCRIPTION	LOCATING FUNCTION
E2360	F	SPRING, GROUNDING: 0.005 in. thk stainless steel; 18 in. lg by 1-1/8 in. w by 3/16 in. h over-all; 5 mtg holes 0.144 in. dia irregularly spaced on a line 1/4 in. from top edge; incl 4 cutouts on 3/8 in. radius by 1/8 in. deep irregularly spaced along bottom edge, and one rectangular cutout 5-1/8 in. lg by 1/8 in. deep on top edge and located 3/8 in. from one end; Hazeltine Elec (mfr and contr) part 1590-1100P1.	Front panel grounding spring
E2361	C	SPRING, GROUNDING: 0.005 in. thk stainless steel, passivated finish; 3 in. lg by 0.255 in. w by 0.135 in. h over-all; "U" shape cross-section; Hazeltine Elec (mfr and contr) part 1590-1104P1.	Z2351 grounding spring
E2362		TERMINAL, LUG: rd tongue end w/0.142 in. to 0.150 in. dia mtg hole; incl 2 holes 3/32 in. dia spaced 1/8 in. c to c in other end for wire accommodation; 41/64 in. lg by 5/16 in. w by 15/64 in. h over-all; Shakeproof Inc (mfr) part 2504-06-00; Hazeltine Elec (contr) part TE-1287-2.	Component connection
E2363		Same as E2356.	Knob for S2354
E2364		FERRULE, RADIO FREQUENCY CABLE, GROUNDING: brass, silver plated; 23/32 in. lg by 9/16 in. w by 1/2 in. h over-all; rh mtg bracket w/9/64 in. dia mtg hole; for use w/RG-55/U and RG-58/U coaxial cable; Industrial Products Co (mfr) part 3975; Hazeltine Elec (contr) part 276-1173P2.	Coaxial termination
E2365		FERRULE, RADIO FREQUENCY CABLE, GROUNDING: brass, silver plated; 23/32 in. lg by 9/16 in. w by 1/2 in. h over-all; lh mtg bracket w/9/64 in. dia mtg hole; for use w/RG-55/U and RG-58/U coaxial cable; Industrial Products Co (mfr) part 6325; Hazeltine Elec (contr) part 276-1173P4.	Coaxial termination
E2366 and E2367		Not used.	
E2368		FERRULE, RADIO FREQUENCY CABLE, GROUNDING: brass, silver plated; 23/32 in. lg by 9/16 in. w by 1/2 in. h over-all; lh mtg bracket w/9/64 in. dia mtg hole; for use w/RG-59/U and RG-62/U coaxial cable; Industrial Products Co (mfr) part 6375; Hazeltine Elec (contr) part 276-1173P3.	Coaxial termination
E2369		Same as E2368.	Coaxial termination
E2370		Not used.	
E2371		SHELL, ELECTRICAL CONNECTOR: for cable termination; c/o 1 Hazeltine part 276-1158G1 Coaxial Connector Body, and 1 ea Navy dwg RE49F246 Symbol no. 3 Nut, dwg RE49F246 Symbol no. 16 Washer, dwg RE49F246 Symbol no. 11 Gasket, and dwg RE49F246 Symbol no. 10 Clamp; approx 1-3/8 in. lg by 1 in. w by 1 in. h over-all; 4 mtg holes 0.125 in. dia on 0.719 in. by 0.719 in. mtg centers; 2 holes 1/4 in. dia in side; Diamond Instrument Co (mfr) part 2039-1; Hazeltine Elec (contr) part 276-1158G3; (same as E418).	Coaxial termination
E2372		Same as E2371.	Coaxial termination
E2373		Same as E2371.	Coaxial termination

TABLE 8-3. MAINTENANCE PARTS LIST — Cont'd.

REF. DESIG.	NOTES	NAME AND DESCRIPTION	LOCATING FUNCTION
E2374		SHELL, ELECTRICAL CONNECTOR: for cable termination; c/o 1 Hazeltine part 276-1158G1 Coaxial Connector Body, and 1 ea Navy dwg RE49F380 Symbol no. 3 Nut, dwg RE49F380 Symbol no. 16 Washer, dwg RE49F380 Symbol no. 11 Gasket, and dwg RE49F380 Symbol no. 10 Clamp; approx 1-3/8 in. lg by 1 in. w by 1 in. h over-all; 4 mtg holes 0.125 in. dia on 0.719 in. by 0.719 in. mtg centers; 2 holes 1/4 in. dia in side; Diamond Instrument Co (mfr) part 2057-1; Hazeltine Elec (contr) part 276-1158G2.	Coaxial termination
E2375		Same as E2374.	Coaxial termination
E2376		Not used.	
E2376A	C	TERMINAL BOARD: nylon base phenolic board; w/39 turret type terminals; 10-1/4 in. lg by 3-1/2 in. w by 3/32 in. thk excluding terminals; Hazeltine Elec (mfr and contr) part 1590-1055G1.	Panel "B" terminations
E2377		Not used.	
E2378		FERRULE, RADIO FREQUENCY CABLE, GROUNDING: brass, silver plated; 23/32 in. lg by 9/16 in. w by 1/2 in. h over-all; rh mtg bracket w/9/64 in. dia mtg hole; for use w/RG-59/U and RG-62/U coaxial cable; Industrial Products Co (mfr) part 4025; Hazeltine Elec (contr) part 276-1173P1.	Coaxial termination
E2379		Same as E2378.	Coaxial termination
E2380		Same as E2378.	Coaxial termination
E2381		Same as E2378.	Coaxial termination
E2382		Same as E2378.	Coaxial termination
H301		SHAFT LOCK, ELECTRONIC COMPONENT: for variable resistor; c/o bright nickel plated brass bushing and lock nut; 1/2 in. lg by 1/2 in. w across hex flats over-all; 3/8 in.-32 NEF-2 mtg thd on bushing; incl compression nut 7/32 in. thk by 7/16 in. across hex flats; for 1/4 in. dia shaft; James Millen Mfg Co (mfr) part 10061; Hazeltine Elec (contr) part 231-1002G1; (same as H123).	Shaft lock for R1365
H302	C	PIN, CLEVIS: for outside case cover; c/o 1 ea Hazeltine Elec part 1620-1007P1 Clevis Pin, part 1620-1008P1 Ring, part 382-1005P1 Chain 4-1/4 in. lg; stainless steel, passivated; 9/32 in. dia by 1-15/16 in. lg excluding ring and chain; Hazeltine Elec (mfr and contr) part 1620-5001G1; (same as H126).	For cover A301
H303	C	STRAP NUT, ELECTRON TUBE SOCKET: 1/16 in. thk brass, cadmium plated; 1-3/16 in. lg by approx 9/16 in. w by 3/8 in. h over-all; two no. 4-40 NC-2 tapped mtg holes spaced 0.875 in. c to c; Cinch Mfg Corp (mfr) part 403; Hazeltine Elec (contr) part NTS-1000M-2.	For XV1350, XV1351, XV1352, XV1354, XV1355, XV1356, XV1357, XV3300, XV3302, XV3303, XV3304, XV3306, XV3307, and XV3312
H304	C	STRAP NUT, ELECTRON TUBE SOCKET: 1/16 in. thk brass, cadmium plated; 1-13/32 in. lg by approx 5/8 in. w by 3/8 in. h over-all; two no. 4-40 NC-2 tapped mtg holes spaced 1.125 in. c to c; Cinch Mfg Corp (mfr) part NTS-1000N-22.	For XV1353, XV3301, XV3305, XV3310 and XV3311

TABLE 8-3. MAINTENANCE PARTS LIST — Cont'd.

REF. DESIG.	NOTES	NAME AND DESCRIPTION	LOCATING FUNCTION
H305		Not used.	
H306	C	BOLT, MACHINE: non-magnetic corrosion resisting steel; passivated finish; semi-finished; hex head 1/2 in. w across flats by 0.242 in. h 5/16 in.-18 NC-2 by 1-3/8 in. lg thd; Hazeltine Elec (mfr and contr) part 207-1023P174.	For H316
H307		BOLT, MACHINE: stainless steel per Spec MIL-S-853A, Class 7, type A; 22,000 psi min yield strength; passivated; semi-finished; hex head, 19/32 in. w across flats by 19/64 in. h; 3/8 in.-16 NC-2 by 1-1/8 in. lg thd; Hazeltine Elec (mfr and contr) part 207-1030P2.	Mounting screw for A302
H308		BOLT, EXTERNALLY RELIEVED BODY: stainless steel per Spec MIL-S-853A, Class 7, type A; 22,000 psi min yield strength; head 3/16 in. lg by 1/2 in. dia; externally relieved body w/0.250 in. dia by 0.025 to 0.030 in. lg shoulder under head followed by shank 0.185 in. dia by 0.845 to 0.850 in. lg; 1/4 in.-20 NC-2 by 1/2 in. lg thd; incl 1/16 in. w by 3/32 in. deep slot in head; Hazeltine Elec (mfr and contr) part 209-1008P1; (same as H103).	Mounting screw for A301
H309		CLAMP, LOOP: nylon; 51/64 in. lg by 3/8 in. h over-all; designed to hold material 1/4 in. max dia; Burndy Engineering Co (mfr) type HP-4N; Hazeltine Elec (contr) part CP-1295-4; (same as H107).	Cable clamp
H310		CLAMP, LOOP: nylon; 29/32 in. lg by 3/8 in. h over-all; designed to hold material 3/8 in. max dia; Burndy Engineering Co (mfr) type HP-6N; Hazeltine Elec (contr) part CP-1295-6.	Cable clamp
H311		CLAMP, LOOP: nylon; 1 in. lg by 3/8 in. h over-all; designed to hold material 0.48 in. max dia; Burndy Engineering Co (mfr) type HP-8N; Hazeltine Elec (contr) part CP-1295-8.	Cable clamp
H312		CLAMP, LOOP: nylon; 7/64 in. lg by 3/8 in. h over-all; designed to hold material 0.59 in. max dia; Burndy Engineering Co (mfr) type HP-10N; Hazeltine Elec (contr) part CP-1295-10.	Cable clamp
H313	B	RETAINER, CAPACITOR: metallic material and finish per Spec MIL-C-25A; 1-3/8 in. lg by 0.766 in. w by 2.688 in. h; two no. 6-32 NC-2A mtg studs spaced 1-9/16 in. c to c; Spec MIL-C-25A, JAN type CP06SA6, except 5/16 in. ±1/32 in. lg studs; Hazeltine Elec (mfr and contr) part 1590-1117P1.	Mounting for C1367, C1375, C2350, C3300 and C3301
H314	C	HANDLE, BOW: for panel; stainless steel, passivated; 5-3/8 in. lg by 2-5/16 in. w by 3/8 in. deep over-all; 3/8 in. dia grip 4-5/8 in. lg; 2 mtg studs 5/16 in.-18 NC-2 on 5 in. mtg centers, threaded 11/16 in. lg; Hazeltine Elec (mfr and contr) part 231-1038P1; (same as H129).	Unit handle
H315		WASHER, RECESSED: stainless steel per Spec MIL-S-853A, Class 7, type A; 3/4 in. od by 0.376 to 0.381 in. id by 1/8 in. thk over-all, recess 5/8 in. dia by 45 deg by 0.062 in. deep; Hazeltine Elec (mfr and contr) part 1593-1007P1.	Part of mounting for A302
H316	C	HANDLE, BAIL: stainless steel, passivated and USMC green paint finish; 6 in. lg by 3-1/2 in. w by 3/8 in. thk over-all; Hazeltine Elec (mfr and contr) part 1620-1009P1; (same as H144).	Handle for A305
H317	F	PIN, SHOULDER, HEADLESS: stainless steel, AISI type 303; passivated finish; 3 in. lg by 0.623 to 0.625 in. dia over-all; one shank 0.623 to 0.625 in. dia by 1-3/8 in. lg w/0.3125 to 0.3135 in. dia radial hole located 3/4 in. from end of pin, other shank 0.593 in. dia by 1-5/8 in. lg w/15 deg by 5/16 in. lg tapered end and one 5/16 in. dia radial hole spaced 1.498 to 1.502 in. c to c from other hole; Hazeltine Elec (mfr and contr) part 1620-1003P1; (same as H146).	Connecting pin for A305

TABLE 8-3. MAINTENANCE PARTS LIST — Cont'd.

REF. DESIG.	NOTES	NAME AND DESCRIPTION	LOCATING FUNCTION
H318	F	PIN, GROOVED, HEADED: stainless steel per Spec MIL-C-853A(SHIPS), Class 7, type A; 22,000 psi min yield strength; passivated finish; flat head, 3/8 in. dia by 1/16 in. h; shank 1-3/16 in. lg by 0.3110 to 0.3125 in. dia w/end chamfered 15 deg by 1/8 in. lg; shank knurled 0.317 in. min dia by 1/4 in. lg, 7/16 in. from head end; Hazeltine Elec (mfr and contr) part 1620-1001P1; (same as H147).	Secures H317 to A305
H319	C	WASHER, FLAT: rd; stainless steel per Spec MIL-S-854(SHIPS), Class 4, Condition A; 70,000 psi min tensile strength; B88 Rockwell hardness; 0.312 in. dia hole, 7/8 in. od by 0.017 in. thk; Hazeltine Elec (mfr and contr) part 236-1078P1.	Washer for MP304
H320	F	WASHER, NON-METALLIC: synthetic rubber per Navy Spec 33R1, Class 1; 15/32 in. od by 13/64 in. id by 1/8 in. thk; 35 to 45 durometer hardness rating; black; Hazeltine Elec (mfr and contr) part 1593-1112P1.	For H1309
H321	F	PIN, SHOULDER, HEADLESS: stainless steel, AISI type 302; passivated finish; 2-1/16 in. lg by 0.370 to 0.375 in. dia over-all; shank 0.246 to 0.249 in. dia by 1-3/32 in. lg w/axial hole 0.185 in. dia by 3/16 in. deep in end; Hazeltine Elec (mfr and contr) part 1620-1004P1; (same as H148).	For A305
H322	C	NUT, SLEEVE: open end type; brass per Spec MIL-B-895, Condition half-hard, B60-90 Rockwell hardness; bright alloy plated finish; double chamfer head; 1/4 in. lg by 3/8 in. dia head; no. 6-32 NC-2 thd, 5/16 in. deep; 0.187 in. dia shank; shank 1-7/8 in. lg under head; groove in shank 0.147 to 0.149 in. dia by 0.028 to 0.031 in. w, 1-3/8 in. from threaded end; Hazeltine Elec (mfr and contr) part 1590-1048P1.	For E315
H323	C	WASHER, NON-METALLIC: nylon; 7/32 in. od by 0.115 to 0.135 in. id by 0.031 in. thk; Polymer Corp (mfr) type FM10001; Hazeltine Elec (contr) part 236-1085.	For mounting C305
H324	C	SCREW, MACHINE: non-magnetic corrosion resisting steel; flat countersunk head 0.477 to 0.507 in. dia by 82 deg countersink, slot drive; 1/4 in.-20 NC-2 by 0.597 in. lg thd; 3/4 in. lg over-all; Hazeltine Elec (mfr and contr) part 207-1008P332.	For A302 mounting
H1301		GROMMET, RUBBER: synthetic rubber, MIL-G-3036; 3/16 in. dia hole, flange 7/16 in. od by 1/16 in. thk, groove 1/16 in. w by 5/16 in. dia, 3/16 in. h over-all; ANA Std part AN931-3-5; Hazeltine Elec (contr) part 359-1001P1; (same as H621).	Protection for insulated wire
H1302		GROMMET, RUBBER: synthetic rubber, MIL-G-3036; 1/4 in. dia hole, flange 5/8 in. od by 1/16 in. thk, groove 1/8 in. w by 7/16 in. dia, 1/4 in. h over-all; ANA Std part AN931-A4-7; Hazeltine Elec (contr) part 359-1001P13; (same as H407).	Protection for insulated wire
H1303		GROMMET, RUBBER: synthetic rubber, MIL-G-3036; 5/8 in. dia hole, flange 1-1/8 in. od by 1/8 in. thk, groove 1/8 in. w by 7/8 in. dia, 3/8 in. h over-all; ANA Std part AN931-A10-14; Hazeltine Elec (contr) part 359-1001P18; (same as H548).	Protection for insulated wire
H1304		Not used.	
H1305		WASHER, FINISHING: stainless steel; 9/32 in. hole dia by 3/4 in. od by 5/32 in. thk; Hazeltine Elec (mfr and contr) part 362-1018P1; (same as H134).	Retains H1307

TABLE 8-3. MAINTENANCE PARTS LIST — Cont'd.

REF. DESIG.	NOTES	NAME AND DESCRIPTION	LOCATING FUNCTION
H1306	F	NUT, PLAIN, KNURLED: steel, AISI type 303; 1/4 in.-20 NC-2 thd; 21/32 in. lg by 0.502 in. max dia over-all, knurled head 1/8 in. lg by 0.381 in. dia; Hazeltine Elec (mfr and contr) part 1587-1053P1; (same as H130).	Chassis centering pin
H1307		BOLT, EXTERNALLY RELIEVED BODY: stainless steel per Spec MIL-S-853A, Class 7, type A; 22,000 psi min yield strength; double chamfer head 11/16 in. lg by 9/16 in. dia; externally relieved body 17/32 in. lg by 5/32 in. dia; 1/4 in.-20 NC-2 by 15/32 in. lg thd incl cone point; 3/32 in. w by 3/32 in. deep slot in head, head knurled, Hazeltine Elec (mfr and contr) part 1587-1095P1; (same as H128).	Main chassis mounting screw
H1308	C	WASHER, RECESSED: 0.032 in. thk stainless steel per Spec MIL-S-854, Class 2, Condition A; passivated finish; 0.564 in. od by 0.196 in. id by 0.12575 in. h over-all, 3/32 in. deep recess; Hazeltine Elec (mfr and contr) part 1593-1111P1; (same as H629).	Retains H1309
H1309	F	SCREW, EXTERNALLY RELIEVED BODY: stainless steel per Spec MIL-S-853A(SHIPS), Class 7, type A; 22,000 psi min yield strength; passivated finish; double chamfer head 7/16 in. lg by 5/16 in. dia; slot type drive; externally relieved body 0.185 to 0.190 in. dia by 1/8 in. lg under head followed by undercut 0.125 in. dia by 5/8 in. lg from under head to end of undercut; no. 10-24 NC-2 thd by 5/16 in. lg incl cone point; head knurled; Hazeltine Elec (mfr and contr) part 1593-1113P1; (same as H614).	Mounting screw for chassis assembly door A306
H1310		LATCH, FASTENER: brass, cadmium plated; approx 8-7/8 in. lg by 1-1/2 in. w by 2-3/8 in. h over-all w/arm in right angle position; Hazeltine Elec (mfr and contr) part/dwg A-19227; (same as H145).	For chassis catch
H1311	C	WASHER, NON-METALLIC: nylon; 0.281 in. od by 0.125 in. id by 0.031 in. thk; Polymer Corp (mfr) type FM10001; Hazeltine Elec (contr) part 236-1003P1.	For mounting C1353
H2350		Not used.	
H2351		RETAINER, ELECTRON TUBE: retains small wafer octal base; 7/8 in. radius from center line of retainer to center line of mtg hole, 1-7/16 in. max from center line of retainer to end of extended clip, 180 deg from center line of mtg hole to center line of loop hinge, 9/16 in. h incl 1/8 in. lg by 0.130 in. max w, anti-rotate tab in bracket, w/5/16 in. lg by 3/16 in. w mtg hole in bracket; Hazeltine Elec (mfr and contr) part 308-1006P1; (same as H111).	Clamp for V3309
H2352	C	RETAINER, ELECTRON TUBE: retains small wafer octal base; 7/8 in. radius from center line of retainer to center line of mtg hole, 1-7/16 in. max from center line of retainer to end of extended clip, 180 deg from center line of mtg hole to center line of loop hinge, 9/16 in. h incl 1/8 in. lg by 0.130 in. max w, anti-rotate tab in bracket, w/5/16 in. lg by 3/16 in. w mtg hole in bracket; Hazeltine Elec (mfr and contr) part 308-1006P2.	Clamp for V3308
H2353 thru H2359		Not used.	
H2360	F	PIN, GROOVED, HEADLESS: stainless steel; passivated; 1 in. lg by 5/16 in. dia; Driv-Lok Pin Co (mfr) type C; Hazeltine Elec (contr) part 1620-1022P1; (same as H436).	For roller O315

TABLE 8-3. MAINTENANCE PARTS LIST — Cont'd.

REF. DESIG.	NOTES	NAME AND DESCRIPTION	LOCATING FUNCTION
H3300		CLAMP, LOOP: nylon; 3/4 in. lg by 3/8 in. h over-all; designed to hold material 0.250 in. max dia; Burndy Engineering Co (mfr) type HP-4N; Hazeltine Elec (contr) part CP-1295-4; (same as H107).	Cable clamp
HR2301 thru HR2350		Not used.	
HR2351		HEATING ELEMENT, ELECTRICAL: rated 115 v, 150 w, 1.3 amp; monel sheath; 8 in. lg by 1-1/2 in. w by 3/8 in. h excluding terminals; Watlow Electric Mfg Co (mfr) part 1209D; Hazeltine Elec (contr) part 280-1090P1; (same as HR151).	Unit heater
J301	E	For reference only.	Input power receptacle for Z2351
J302		CONNECTOR, RECEPTACLE, ELECTRICAL: 1 contact; 1 connector mating end; female contact, coaxial, plain type; 50 ohms characteristic impedance; low loss plastic insert; straight shape; 0.731 in. lg by 1 in. w by 1 in. h excluding terminal, w/partially inclosing copper base alloy shell; resistant to corrosion, precious metal plated; locking type, 5/8 in.-24 thd on shell for mating w/coupling nut; four 1/8 in. dia mtg holes on 0.718 in. by 0.718 in mtg centers; Spec MIL-C-71A, type UG-58A/U; Hazeltine Elec (contr) part 276-1030P2; (same as J152).	Modulator trigger receptacle
J303		Same as J302.	Video output receptacle
J304		Same as J302.	Coho sync input receptacle
J305		Same as J302.	Remote video receptacle
J306		Same as J302.	60 mc IF input receptacle
J307		CONNECTOR, RECEPTACLE, ELECTRICAL: one contact; one connector mating end; female, coaxial, plain type; 50 ohms characteristic impedance; 500 v peak; low loss plastic dielectric; straight shape; 51/64 in. lg by 0.500 in. dia over-all excluding terminal; w/partially inclosing copper base alloy shell, precious metal plated; locking type, bayonet latch type; single through-hole mtg w/3/8 in.-32 thd body; AN type UG-625/U; Hazeltine Elec (contr) part 276-1079P1.	60 mc IF input receptacle
J308		Same as J307.	Coho input receptacle
J309		Not used.	
J310		CONNECTOR, RECEPTACLE, ELECTRICAL: 3 contacts; one connector mating end; male, pin type; rated 22 amps, 700 v dc, 500 v ac working voltage; dielectric material per Spec MIL-C-5015B; straight shape; 1-1/8 in. lg by 1-3/16 in. w by 1-3/16 in. h excluding terminal; w/ inclosing aluminum base alloy shell, resistant to corrosion; polarized; locking type, 7/8 in.-20 thd on shell for mating w/coupling nut, four 0.120 in. dia mtg holes on 29/32 in. by 29/32 in. mtg centers; Spec MIL-C-5015B, type AN3102C-14S-1P; Hazeltine Elec (contr) part AN3102C-14S-1P.	Range gate
J311 thru J349		Not used.	

TABLE 8-3. MAINTENANCE PARTS LIST — Cont'd.

REF. DESIG.	NOTES	NAME AND DESCRIPTION	LOCATING FUNCTION
J350	B	CONNECTOR, RECEPTACLE, ELECTRICAL: 1 contact; 1 connector mating end; female contact, coaxial, plain type; 50 ohms characteristic impedance; low loss plastic insert; straight shape; 0.715 in. lg by 11/16 in. w by 11/16 in. h excluding terminal; w/partially inclosing copper base alloy shell, resistant to corrosion, precious metal plated; locking type, bayonet latch coupling; four no. 3-56 thd mtg holes on 1/2 in. mtg centers; Spec MIL-C-3608, type UG-290/U; Hazeltine Elec (contr) part 276-1061P1; (same as J153).	Coho sync input receptacle
J351		Same as J350.	Coho output receptacle
J1301		Same as J350.	Delay amplifier input receptacle
J1302 thru J1349		Not used.	
J1350		Same as J350.	Carrier out receptacle
J2301		Same as J350.	Non-delay amplifier input receptacle
J2302 thru J2349		Not used.	
J2350		For reference only.	Delay line input receptacle
J2351		For reference only.	Delay line output receptacle
J2352		Same as J350.	Z2350 input connector
J2353		Same as J350.	Z2350 output connector
K3300		RELAY, ARMATURE: contact arrangement 2C2C; contacts rated 1 amp at 24 v dc or 115 v ac non-inductive; 1 non-inductive winding, 425 ohms dc resistance; 28 v dc operating voltage; 1-1/2 in. lg by 1 in. w by 1-9/16 in. h over-all; Allied Control Co (mfr) part STKX-69; Hazeltine Elec (contr) part 271-1114P1.	MTI operation relay
K3301		Same as K3300.	Normal operation relay
L301		COIL, RADIO FREQUENCY: tuning; single winding; single layer wound; unshielded; 6 turns no. 26 AWG heavy formex wire; inductance 0.16 uh ±1% at 39.6 mc; 0.013 ohms dc resistance; 3/16 in. dia by 1/2 in. lg excluding terminals; phenolic form; form 0.156 in. dia by 1/2 in. lg; fungus proof, varnish impregnated; Hazeltine Elec (mfr and contr) part 375-1183G1.	V302 grid tuning
L302		COIL, RADIO FREQUENCY: choke; single winding; single layer wound; unshielded; 12.0 uh ±20% at 3.0 mc; approx 50 turns no. 38 AWG wire; 0.1875 in. max dia by 7/16 in. max lg excluding terminals; powdered iron core; terminal mounted; 2 axial wire lead terminals 1-1/4 in. lg min; yellow coding dot; winding cemented to form, insulated alkyd resin cover over core and winding; Jeffers Elec (mfr) part 10107-2; Hazeltine Elec (contr) part 375-1076P1.	V301 plate decoupling

TABLE 8-3. MAINTENANCE PARTS LIST — Cont'd.

REF. DESIG.	NOTES	NAME AND DESCRIPTION	LOCATING FUNCTION
L303		COIL, RADIO FREQUENCY: one winding; single layer wound; approx 27 turns no. 28 AWG heavy formex wire; 0.72 uh inductance at 18.8 mc, 1.3 ohms dc resistance; Hazeltine Elec (mfr and contr) part 375-1185G1.	V303 grid tuning
L304		COIL, RADIO FREQUENCY: one winding; single layer wound; 20 turns no. 22 AWG heavy formex wire; 0.55 uh inductance at 21.3 mc, 0.035 ohms dc resistance; Hazeltine Elec (mfr and contr) part 375-1184G1.	V304 grid tuning
L305		Same as L304.	V305 grid tuning
L306		COIL, RADIO FREQUENCY: one winding; single layer wound; 25 turns no. 30 AWG heavy formex wire; 0.67 uh ±1% inductance at 19.5 mc, 0.095 ohms dc resistance; Hazeltine Elec (mfr and contr) part 375-1186G1.	V306 grid tuning
L307		COIL, RADIO FREQUENCY: single winding; single layer close wound; approx 140 turns no. 38 AWG wire; unshielded; 80 uh ±25%, 15 ma, approx 4 ohms dc resistance; 3/4 in. lg by 0.178 in. dia excluding terminals; powdered iron core form; form 3/4 in. lg by 0.170 in. dia; terminal mounted; 2 axial wire lead terminals 1-3/4 in. lg min; varnish coated; Hazeltine Elec (mfr and contr) part 375-1026G1.	V307 grid tuning
L308		COIL, RADIO FREQUENCY: choke; single winding; single layer wound; unshielded; 0.25 uh ±20% at approx 30.2 mc, approx 13 turns no. 28 AWG wire; 0.1875 in. max dia by 7/16 in. max lg excluding terminals; resin bonded form and core; terminal mounted; 2 axial wire lead terminals 1-1/4 in. min lg; red coding dot; wound cemented to form, insulated alkyd resin cover over core and windings; Jeffers Elec (mfr) part 10100-1; Hazeltine Elec (contr) part 375-1110G1.	Heater decoupling
L309 thru L349		Not used.	
L350		Same as L302.	V350 cathode filter
L351		COIL, RADIO FREQUENCY: tuning; single winding; single layer wound; unshielded; 22 turns no. 28 AWG heavy formex wire; inductance 0.62 uh ±1% at 20.2 mc; 0.068 ohms dc resistance; 3/16 in. max dia by 1/2 in. lg excluding terminals, phenolic form; form 0.125 in. dia by 1/2 in. lg; terminal mounted; 2 axial wire lead terminals, ea 1-1/2 in. lg; fungus proof, varnish coated; Hazeltine Elec (mfr and contr) part 375-1179G1; (same as L230).	V351 grid tuning
L352		Same as L351.	V352 grid tuning
L353		Same as L302.	V352 plate tuning
L354		Same as L301.	V353 grid tuning
L355		COIL, RADIO FREQUENCY: tuning; single winding; single layer wound; unshielded; 48 turns no. 36 AWG heavy formex wire; inductance 4.3 uh ±1% at 7.75 mc; 0.88 ohms dc resistance; 3/16 in. dia by 1/2 in. lg excluding terminals; phenolic form; form 0.156 in. dia by 1/2 in. lg; terminal mounted; 2 axial wire lead terminals, ea 1-1/2 in. lg; fungus proof, varnish coated; Hazeltine Elec (mfr and contr) part 375-1182G1.	V353 cathode

TABLE 8-3. MAINTENANCE PARTS LIST — Cont'd.

REF. DESIG.	NOTES	NAME AND DESCRIPTION	LOCATING FUNCTION
L356		Same as L351.	V354 grid tuning
L357		Same as L302.	V354 plate decoupling
L358		COIL, RADIO FREQUENCY: tuning; single winding; single layer wound; unshielded; 32 turns no. 32 AWG heavy formex wire; 1.2 uh ±1% at 14.2 mc; 3/16 in. max dia by 1/2 in. lg excluding terminals; phenolic form; form 0.125 in. dia by 1/2 in. lg; terminal mounted; 2 axial wire lead terminals, ea 1-1/2 in. lg; fungus proof; varnish coated; Hazeltine Elec (mfr and contr) part 375-1181G1.	V354 plate tuning
L359		Same as L308.	Heater decoupling
L360		Same as L308.	Heater decoupling
L1301		COIL, RADIO FREQUENCY: tuning; single winding; single layer wound; unshielded; 54 turns no. 36 AWG heavy formex wire; inductance 3.9 uh ±1% at 8 mc; 0.65 ohms dc resistance; 3/16 in. max dia by 1/2 in. lg excluding terminals; phenolic form; form 0.156 in. dia by 1/2 in. lg; terminals mounted; varnish coated, fungus proof; Hazeltine Elec (mfr and contr) part 375-1190G1.	V1301 input tuning
L1302		COIL, RADIO FREQUENCY: tuning; single winding, single layer wound; unshielded; approx 75 turns no. 36 AWG formex insulated copper wire; inductance 45.0 uh ±1% at 2.35 mc; 0.215 in. dia by 0.625 in. lg excluding terminals; powdered iron form; form 0.200 in. dia by 0.625 in. lg; terminal mounted; 2 axial wire lead terminals, ea 1-1/2 in. min lg; fungus proof; varnish coated; Hazeltine Elec (mfr and contr) part 375-1268G1.	V1301 input tuning
L1303		COIL, RADIO FREQUENCY: choke; single winding, single layer wound; unshielded; 49 turns no. 34 F magnet wire; inductance 23.5 uh ±1% at 3.25 mc, 0.75 ohms dc resistance; 5/8 in. lg by 13/64 in. max dia excluding terminals; powdered iron core form; form 5/8 in. lg by 0.187 in. dia; terminal mounted; 2 axial wire lead terminals 1-1/2 in. lg, varnish coated; Hazeltine Elec (mfr and contr) part 375-1176G1.	V1302 grid tuning
L1304		COIL, RADIO FREQUENCY: single winding, single layer wound; approx 22 turns no. 24 AWG wire, vinyl insulation; unshielded; 3.5 uh ±20% at 8.5 mc; rated dc current 0.40 amp molded powdered iron form; form 0.200 in. dia by 11/16 in. lg excluding terminals; 2 axial wire lead terminals; 1-3/8 in. min lg; Hazeltine Elec (mfr and contr) part 375-1156G1.	Heater decoupling for V1301
L1305		Same as L1303.	V1303 grid tuning
L1306		Same as L1304.	V1302 heater decoupling
L1307		Same as L1303.	V1304 grid tuning
L1308		Same as L1304.	V1303 heater decoupling
L1309		COIL, RADIO FREQUENCY: tuning; single winding; single layer wound; unshielded; 35 turns no. 34 heavy formex wire; inductance 14.2 uh ±1% at 9 mc; 0.53 ohms dc resistance; 5/8 in. lg by 7/32 in. max dia excluding terminals; powdered iron core form, for 5/8 in. lg by 0.187 in. dia; terminal mounted; 2 axial wire lead terminals; 1-1/2 in. lg; varnish coated; Hazeltine Elec (mfr and contr) part 375-1177G1.	V1305 grid tuning

TABLE 8-3. MAINTENANCE PARTS LIST — Cont'd.

REF. DESIG.	NOTES	NAME AND DESCRIPTION	LOCATING FUNCTION
L1310		Same as L1304.	V1304 heater decoupling
L1311		Same as L1304.	V1306 heater decoupling
L1312		Same as L307.	V1306 output filter
L1313 thru L1349		Not used.	
L1350		Same as L1304.	Heater decoupling for V1350
L1351		Same as L1304.	Heater decoupling for V1351
L1352		COIL, RADIO FREQUENCY: one winding; 3-pie universal wound; approx 1344 turns of no. 38 AWG SSE wire; 30 mh ±10% inductance at 90 kc; 108 ohms ±15% dc resistance; Hazeltine Elec (mfr and contr) part 375-1187G1.	V1353 cathode tuning
L1353		Same as L1304.	Heater decoupling for V1352
L1354		Same as L1304.	Heater decoupling for V1353
L1355		COIL, RADIO FREQUENCY: one winding; single layer wound; 43 turns no. 34 AWG heavy formex wire, 20 uh ±1% inductance at 3.5 mc; 0.66 ohms dc resistance; Hazeltine Elec (mfr and contr) part 375-1192G1.	V1354 plate tuning
L1356		COIL, RADIO FREQUENCY: one winding; single layer wound; approx 60 turns no. 34 AWG Formvar insulated wire; 29.5 uh ±1% inductance at 2.9 mc; 7.66 ohms dc resistance; Hazeltine Elec (mfr and contr) part 375-1261G1.	V1355 grid filter
L1357		Same as L1304.	V1354 heater decoupling
L1358		COIL, RADIO FREQUENCY: one winding; single layer wound; 33 turns no. 34 AWG heavy formex wire; 14 uh inductance at 4.2 mc; 0.48 ohms dc resistance; Hazeltine Elec (mfr and contr) part 375-1191G1.	V1356 grid tuning
L1359		Same as L1304.	V1355 heater decoupling
L1360		Same as L1309.	V1357 grid tuning
L1361		Same as L1304.	V1356 heater decoupling
L1362		COIL, RADIO FREQUENCY: one winding; single layer wound; approx 90 turns no. 36 AWG Formvar insulated wire; 60 uh ±1% inductance at 2.10 mc; 11.3 ohms dc resistance; Hazeltine Elec (mfr and contr) part 375-1259G1.	V1357 plate tuning
L1363		COIL, RADIO FREQUENCY: one winding; single layer wound; approx 52 turns no. 34 AWG Formvar insulated wire; 24.0 uh ±1% inductance at 3.30 mc; 8.3 ohms dc resistance; Hazeltine Elec (mfr and contr) part 375-1260G1.	V1357 plate coupling
L1364		Same as L1304.	V1357 heater decoupling

TABLE 8-3. MAINTENANCE PARTS LIST — Cont'd.

REF. DESIG.	NOTES	NAME AND DESCRIPTION	LOCATING FUNCTION
L1365		Same as L1301.	V1357 output tuning
L2301		Same as L1303.	V2302 grid tuning
L2302		Same as L1304.	V2301 heater decoupling
L2303		Same as L1303.	V2303 grid tuning
L2304		Same as L1304.	V2302 heater decoupling
L2305		Same as L1303.	V2304 grid tuning
L2306		Same as L1304.	V2303 heater decoupling
L2307		Same as L1309.	V2305 grid tuning
L2308		Same as L1304.	V2304 heater decoupling
L2309		Same as L1304.	V2306 heater decoupling
L2310		Same as L307.	V2306 output filter
L2311		COIL, RADIO FREQUENCY: tuning; single winding; single layer wound; unshielded; 66 turns no. 36 AWG heavy formex magnet wire; inductance 39.0 uh at 2.5 mc; dc resistance 1.4 ohms; fungus proof, varnish coated; Hazeltine Elec (mfr and contr) part 375-1178G1.	V2301 grid tuning
M2301 thru M2349		Not used.	
M2350		GALVANOMETER: panel type; dc; marked w/black line at normal zero and red line at nom 50 ua position; hermetically sealed metal case; rd; 2.695 in. max dia mtg flange, meter body 2.210 in. max dia by 1.86 in. deep behind flange less terminals, 2 screw-stud type terminals no. 8-32, 10-32 or 1/4 in.-28 by 0.500 min lg thd; 100 ua required for full scale deflection; calibrated for non-magnetic panel or magnetic steel panels 1/16 to 1/8 in. thk; scale markings on white background; self-contained; three mtg holes 0.125 in. dia spaced 120 deg apart on 1.22 in. radius in flange; 935 ohms ±10% dc resistance; meets requirements of MIL type MR26W100DCUA meter per Spec MIL-M-6A except as noted above; Hazeltine Elec (mfr and contr) part 1590-1111P1; (same as M501).	Front panel test meter
MP301	B	ADHESIVE: for rubber gasket; neoprene; B.B. Chemical Co (mfr) part 1015; Hazeltine Elec (contr) part 230-1007P1.	For O305
MP302	C	PRIMER, ADHESIVE: for rubber adhesive; B.B. Chemical Co (mfr) part 1007; Hazeltine Elec (contr) part 230-1019P1.	Primer for MP303
MP303	B	ADHESIVE: for rubber channel; neoprene, high initial strength; B.B. Chemical Co (mfr) part 1021; Hazeltine Elec (contr) part 230-1020P1.	For MP301, O307 and O1307
MP304	F	ROLLER, CHASSIS: rd, brass, nickel plated; 0.312 in. dia hole; 1-1/8 in. od by 7/16 in. thk; Hazeltine Elec (mfr and contr) part 1587-1094P1; (same as MP116).	For signal comparator chassis
MP305	F	SHAFT, ROLLER: for chassis roller; stainless steel per Spec AISI type 303; passivated finish; cylindrical shank 1-5/32 in. lg by 0.305 in. dia w/1/2 in. sq head; 1-21/32 in. lg by 1/2 in. w by 1/2 in. h over-all; incl 0.196 in. dia hole centered and drilled through side of head; end of shank chamfered 1/64 in.; Hazeltine Elec (mfr and contr) part 1587-1093P1; (same as MP114).	For MP304

TABLE 8-3. MAINTENANCE PARTS LIST — Cont'd.

REF. DESIG.	NOTES	NAME AND DESCRIPTION	LOCATING FUNCTION
MP306	F	SHAFT, ROLLER: for chassis roller; stainless steel per Spec AISI type 303; passivated finish; cylindrical shank 55/64 in. lg by 0.305 in. dia w/1/2 in. sq head; 1-23/64 in. lg by 1/2 in. w by 1/2 in. h over-all; incl 0.196 in. dia hole centered and drilled through side of head; end of shank chamfered 1/64 in.; Hazeltine Elec (mfr and contr) part 1587-1093P2; (same as MP115).	For MP304
MP307	C	GASKET: aluminum wire mesh impregnated w/synthetic rubber; 1-3/16 in. lg by 1-3/16 in. w by 0.020 in. thk over-all; 3/4 in. dia of aperture; four 0.128 in. dia bolt holes spaced 0.906 in. by 0.906 in. c to c, ea bolt hole spaced 9/64 in. from outer edge; corners rounded on 9/64 in. radius; Hazeltine Elec (mfr and contr) part 287-1032P11.	Gasket for J310
O301		BOOT, DUST AND MOISTURE SEAL: silicone rubber flexible component per Spec MIL-B-5423; 0.625 in. across hex flats by 9/32 in. h over-all; for 1/4 in. dia shaft; w/3/8 in.-32 thd mtg nut; incl one neoprene "O" ring; Radio Frequency Labs (mfr) part H-1268; Hazeltine Elec (contr) part 203-1003G2; (same as MP106).	For S2353 and S2354
O302	B	COVER, ELECTRICAL CONNECTOR: metallic material, resistant to corrosion; 9/16 in. dia by 5/8 in. lg, incl beaded chain 2-1/4 in. lg; mounts by bayonet lock type coupling slots; Navy dwg RE49F331, AN type CW-123/U; Industrial Products Co (mfr) part 1500; Hazeltine Elec (contr) part 218-1005P1.	Cap for TP301
O303	C	COVER, ELECTRICAL CONNECTOR: metallic material, not resistant to corrosion; 3/4 in. dia by 5/8 in. h excluding chain; 5/8 in.-24 internal thd for mtg; American Phenolic Corp (mfr) part 83-1AC; Hazeltine Elec (contr) part 218-1006P1.	Cap for J305
O304	C	CLIP, RETAINING: stainless steel per AISI Spec no. 302; 75,000 psi min tensile strength; B94 Rockwell hardness; Hazeltine Elec (mfr and contr) part 1620-1005P1; (same as O102).	Secures H302 to A305
O305	A	GASKET: natural gum rubber; 22-3/16 in. lg by 17-11/16 in. w by 1/4 in. thk over-all; aperture 21-9/16 in. lg by 17-1/16 in. w, 5/16 in. w bearing surface, inside corners rounded on 7/32 in. radius, outside corners rounded on 1/8 in. radius; Hazeltine Elec (mfr and contr) part 1620-1012P2.	For A301
O306		GASKET: aluminum wire mesh impregnated w/synthetic rubber; 1 in. lg by 1 in. w by 0.020 in. thk over-all; 5/8 in. dia of aperture, four 0.128 in. dia bolt holes spaced 0.719 in. by 9.719 in. c to c, ea bolt hole spaced 9/64 in. from outer edge, corners rounded on 9/64 in. radius; Hazeltine Elec (mfr and contr) part 287-1032P4; (same as O131).	For J302, J303, J304, J305 and J306
O307	C	RUBBER STRIP, CELLULAR: sponge rubber, rectangular strip; 14-1/16 in. lg by 1/2 in. w by 3/16 in. thk; Globe Rubber Works Inc (mfr) type 315; Hazeltine Elec (contr) part 287-1034P1.	Front panel gasket
O308		Not used.	
O309	F	SPRING, GROUNDING: flat; 0.010 in. thk beryllium copper, silver plated; 5-1/4 in. lg by 0.060 in. w by 0.317 in. deep over-all; Hazeltine Elec (mfr and contr) part 288-1010P6.	Grounding for Z1300 and Z2300
O310 and O311		Not used.	

TABLE 8-3. MAINTENANCE PARTS LIST — Cont'd.

REF. DESIG.	NOTES	NAME AND DESCRIPTION	LOCATING FUNCTION
O312		CLIP, RETAINING: stainless steel per AISI Spec no. 302, 75,000 psi min tensile strength; B94 Rockwell hardness; Hazeltine Elec (mfr and contr) part 1620-1006P1; (same as O139).	For outer case A305
O313		PACKING, PREFORMED: synthetic rubber per Spec MIL-P-5516, Class B; 9/16 in. od by 3/8 in. id by 3/32 in. thk nom; ANA Std part AN6227-8; Hazeltine Elec (contr) part 287-1004P8.	Part of mounting for A302
O314		Not used.	
O315	F	ROLLER, BEARING: cylindrical; brass, cadmium plated; flat end; solid; 31/32 in. dia by 7/16 in. lg; 0.314 to 0.315 in. dia mtg hole in center; Hazeltine Elec (mfr and contr) part 1620-1014P2.	For inner case
O316	B	RING, RETAINING: carbon spring steel; 0.145 in. id by 0.025 in. thk; Waldes Kohinoor Inc (mfr) part 5133-18-MI; Hazeltine Elec (contr) part 362-1015P7; (same as O125).	Retains H322
O317	C	BUSHING, TAPERED: stainless steel per Spec MIL-S-853A(SHIPS), Class 7, type A; passivated; 5/8 in. dia one end tapered to 1/2 in. dia other end, 5/8 in. lg over-all; w/center hole 0.390 in. dia by 1/2 in. deep counterbored to 0.328 in. dia by 1/8 in. deep; Hazeltine Elec (mfr and contr) part 204-1009P1; (same as O142).	Bushing for H316
O318	F	BLOCK, MOUNTING: for handles; aluminum alloy, anodized and painted USMC green; rectangular; 4-3/4 in. lg by 7/8 in. w by 7/8 in. h over-all; 2 mtg holes 0.348 in. dia spaced 2 in. c to c; Hazeltine Elec (mfr and contr) part 1620-1010G1; (same as O144).	Mounting block for H314
O319	C	VALVE, SAFETY RELIEF: equalizes internal pressure of container to within 2.5 psi of external atmospheric pressure range of 4.2 to 15 psi; aluminum body, painted USMC green; mounts by 3/4 in.-16 NF-2 by 19/32 in. lg thd bushing; body 2-3/4 in. dia by 9/16 in. h; incl seal, plain washer, lockwasher and hex nut for mtg; A. Schrader's Son (mfr) part 4594A; Hazeltine Elec (contr) part 381-1012P1; (same as O145).	Air pressure valve for A305
O1301	B	CLIP, ELECTRICAL: ferrule type; beryllium copper; silver plated; 9/16 in. lg by 3/8 in. w by 13/32 in. h; Littelfuse Inc (mfr) part 123002; Hazeltine Elec (contr) part 343-1012P1.	For Z2350
O1302 and O1303		Not used.	
O1304	F	WASHER, NON-METALLIC: rd; black neoprene per Spec JAN-R-1149, Class 1, 35 to 45 durometer; rd hole; 3/16 in. id by 11/16 in. od by 1/8 in. thk; Hazeltine Elec (mfr and contr) part 1587-1096P1; (same as O113).	For H1307
O1305		Not used.	
O1306	F	SPRING, LATCH: flat type; for chassis latch; clock spring steel no. 1095, cadmium plated; 4-5/8 in. lg by 7/16 in. w by 0.062 in. thk; two 0.187 in. dia mtg holes spaced 1 in. c to c; Hazeltine Elec (mfr and contr) part/dwg SP-1605; (same as O127).	Spring for H1310
O1307	C	RUBBER STRIP, CELLULAR: sponge rubber; rectangular strip; 21-1/4 in. lg by 7/8 in. w by 3/16 in. thk; four holes 3/8 in. dia unevenly spaced; Globe Rubber Works, Inc (mfr) type 315; Hazeltine Elec (contr) part 1587-1120P1; (same as O130).	Front panel gasket

TABLE 8-3. MAINTENANCE PARTS LIST — Cont'd.

REF. DESIG.	NOTES	NAME AND DESCRIPTION	LOCATING FUNCTION
O1308	C	RUBBER STRIP, CELLULAR: sponge rubber per Spec MIL-R-6130, Grade C, Class-Medium; 10-13/32 in. lg by 1-13/16 in. w by 3/8 in. thk; incl 2 holes 1/4 in. dia spaced 8-1/16 in. c to c; Hazeltine Elec (mfr and contr) part GA-1761.	For A306
O1309	A	GASKET: rubber; irregular shape; 2-1/8 in. lg by 2-1/8 in. w aperture; 3 mtg holes 0.196 in. dia on 2-5/8 in. by 3-5/8 in. triangular mtg centers; 6 in. lg by 3-7/8 in. w by 1/8 in. thk; Hazeltine Elec (mfr and contr) part 1590-1072P1.	For Z2351
O1310		Not used.	
O1311		GASKET: neoprene per Spec JAN-R-1149, Class 1; 11/16 in. lg by 11/16 in. w by 0.031 in. thk; 15/32 in. dia of aperture; four 0.128 in. dia mtg holes spaced 1/2 in. by 1/2 in. c to c, corners rounded on 1/16 in. radius, mtg holes located 3/32 in. from ea outside edge; Hazeltine Elec (mfr and contr) part 287-1042P1.	For TP301
O1312		GASKET: synthetic rubber; 2-11/16 in. od by 2-1/8 in. id by 3/32 in. thk; 6 mtg holes 3/32 in. dia equally spaced on 2.44 in. dia bolt circle, center hole countersunk 2-1/4 in. dia by 1/16 in. deep on one surface; Neosil Corp (mfr) part 1006-56; Hazeltine Elec (contr) 287-1035P1; (same as O464).	Gasket for M2350
O2350 and O2351		Not used.	
O2352	F	PLATE, REINFORCING: for terminal board; non-magnetic corrosion resisting steel, passivated finish; 9/16 in. lg by 17/64 in. w by 0.032 in. thk over-all; two 0.144 to 0.161 in. dia mtg holes spaced 5/16 in. c to c; Hazeltine Elec (mfr and contr) part 224-1003P1; (same as O124).	For E2351
O2353 thru O3300		Not used.	
O3301		RETAINER, CAPACITOR: ferrule type; for mtg 5/8 in. to 11/16 in. dia capacitor; spring steel, resistant to salt water; 3/4 in. lg by 5/8 in. w by 19/32 in. h over-all; Prestole Corp (mfr) part 500-625; Hazeltine Elec (contr) part 343-1003P3.	Clip for C3304, C3306, C3307, and C3308
P301		CONNECTOR, PLUG, ELECTRICAL: 22 contacts; one connector mating end; 4 contacts, female, pin type; rated 41 amps, 700 v dc, 500 v ac working voltage; 18 contacts, female, pin type; rated 22 amps, 700 v dc, 500 v ac working voltage; dielectric material per Spec MIL-C-5015B; straight shape; 2-5/16 in. max lg by 1-31/32 in. max od over-all; locking type, 1-3/4 in.-18 thd coupling nut; w/o conduit nut 1-7/16 in.-18 external thd; pressurized; Spec MIL-C-5015B, type AN3106C-28-11S; Hazeltine Elec (contr) part 276-1160P5.	Cable termination for W7
P302	B	CONNECTOR, PLUG, ELECTRICAL: one contact; one connector mating end; male, plain coaxial; 500 v peak rating; 50 ohms characteristic impedance; low loss plastic dielectric; straight shape; 1-7/8 in. max lg by 25/32 in. dia over-all; locking type, 5/8 in.-24 NEF-2 thd coupling nut; 0.357 in. dia max cable accommodated, w/cable clamp; weatherproof; Spec MIL-C-71A; Navy dwg RE49F402, AN type UG-18B/U; Hazeltine Elec (contr) part 276-1029P1.	Cable termination for W3

TABLE 8-3. MAINTENANCE PARTS LIST — Cont'd.

REF. DESIG.	NOTES	NAME AND DESCRIPTION	LOCATING FUNCTION
P303		Same as P302.	Cable termination for W14
P304		Same as P302.	Cable termination for W6
P305		Same as P302.	Cable termination for W13
P306		Same as P302.	Cable termination for W5
P307	B	CONNECTOR, PLUG, ELECTRICAL: one contact, one connector mating end; male, plain coaxial; 500 v peak rating; 50 ohms characteristic impedance; low loss plastic dielectric; straight shape; 1 in. max lg by 9/16 in. dia over-all excluding cable clamping nut; locking type, bayonet latch type; 0.212 in. dia max cable accommodated, w/cable clamp; weatherproof; Navy dwg RE49F246, AN type UG-88/U; Industrial Products Co (mfr) part 1200; Hazeltine Elec (contr) part 276-1086P1; (same as P224).	IF input
P308	B	CONNECTOR, PLUG, ELECTRICAL: one contact; one connector mating end; male, plain coaxial; 500 v peak rating; 50 ohms characteristic impedance; low loss plastic dielectric; straight shape; 0.913 in. lg by 9/16 in. dia over-all; excluding cable clamping nut; locking type, bayonet latch type; 0.258 in. dia max cable accommodated, w/cable clamp; weatherproof; Spec MIL-C-3608; Navy dwg RE49F380; AN type UG-260/U; Industrial Products Co (mfr) part 3100; Hazeltine Elec (contr) part 276-1062P1.	Coho input
P309		Not used.	
P310		CONNECTOR, PLUG, ELECTRICAL: 3 contacts; one connector mating end; female, pin type; rated 22 amps, 700 v dc, 500 v ac working voltage; dielectric material per Spec MIL-C-5015B; straight shape; 1-11/16 in. max lg by 1-5/32 in. max od over-all; locking type, 7/8 in.-20 thd coupling nut; w/o conduit nut 3/4 in.-20 external thd; Spec MIL-C-5015B, type AN3106A-14S-1S; Hazeltine Elec (contr) part PL-1419.	Mates with J310
P311 thru P349		Not used.	
P350		Same as P307.	Coho sync input
P351		Same as P308.	Coho output
P1301		Same as P308.	Delay amplifier input
P1302 thru P1349		Not used.	
P1350		Same as P308.	Carrier output
P1351 thru P1399		Not used.	
P2301		Same as P308.	Non-delay amplifier input

TABLE 8-3. MAINTENANCE PARTS LIST — Cont'd.

REF. DESIG.	NOTES	NAME AND DESCRIPTION	LOCATING FUNCTION
P2302 thru P2349		Not used.	
P2350		Same as P308.	Delay line input
P2351		Same as P308.	Delay line output
R301		RESISTOR, FIXED, COMPOSITION: 47 ohms, ±5%; 1/2 w; F characteristic; body 0.416 in. max lg by 0.161 in. max od; insulated; Spec MIL-R-11A, MIL type RC20GF470J; Hazeltine Elec (contr) part 280-1015P25.	IF input termination
R302	B	RESISTOR, FIXED, COMPOSITION: 220 ohms, ±5%; 1/2 w; F characteristic; body 0.416 in. max lg by 0.161 in. max od; insulated; Spec MIL-R-11A, MIL type RC20BF221J; Hazeltine Elec (contr) part 280-1015P49; (same as R231).	V301 cathode bias
R303	B	RESISTOR, FIXED, COMPOSITION: 1000 ohms, ±5%; 1/2 w; F characteristic; body 0.416 in. max lg by 0.161 in. max od; insulated; Spec MIL-R-11A, MIL type RC20BF102J; Hazeltine Elec (contr) part 280-1015P73.	V301 gain control decoupling
R304	B	RESISTOR, FIXED, COMPOSITION: 10 ohms, ±5%; 1/2 w; F characteristic; body 0.416 in. max lg by 0.161 in. max od; insulated; Spec MIL-R-11A, MIL type RC20BF100J; Hazeltine Elec (contr) part 280-1015P1.	V302 grid suppressor
R305	B	RESISTOR, FIXED, COMPOSITION: 2200 ohms, ±5%; 1/2 w; F characteristic; body 0.416 in. max lg by 0.161 in. max od; insulated; Spec MIL-R-11A, MIL type RC20BF222J; Hazeltine Elec (contr) part 280-1015P85; (same as R228).	V302 plate load
R306		Same as R302.	V302 cathode bias
R307	B	RESISTOR, FIXED, COMPOSITION: 3300 ohms, ±5%; 1/2 w; F characteristic; body 0.416 in. max lg by 0.161 in. max od; insulated; Spec MIL-R-11A, MIL type RC20BF332J; Hazeltine Elec (contr) part 280-1015P91.	V303 plate load
R308		Same as R302.	V303 cathode bias
R309		Same as R301.	+150 bus decoupling
R310	B	RESISTOR, FIXED, COMPOSITION: 47,000 ohms, ±5%; 1/2 w; F characteristic; body 0.416 in. max lg by 0.161 in. max od; insulated; Spec MIL-R-11A, MIL type RC20BF473J; Hazeltine Elec (contr) part 280-1015P133; (same as R111).	V304 grid divider
R311		Same as R303.	Gain bus decoupling
R312	B	RESISTOR, FIXED, COMPOSITION: 100,000 ohms, ±5%; 1/2 w; F characteristic; body 0.416 in. max lg by 0.161 in. max od; insulated; Spec MIL-R-11A, MIL type RC20BF104J; Hazeltine Elec (contr) part 280-1015P145.	V304 grid divider
R313		Same as R307.	V304 plate load

TABLE 8-3. MAINTENANCE PARTS LIST — Cont'd.

REF. DESIG.	NOTES	NAME AND DESCRIPTION	LOCATING FUNCTION
R314	B	RESISTOR, FIXED, COMPOSITION: 4700 ohms, ±5%; 1 w; F characteristic; body 0.760 in. max lg by 0.264 in. max od; insulated; Spec MIL-R-11A, MIL type RC30BF472J; Hazeltine Elec (contr) part 280-1002P97; (same as R112).	V304 cathode bias
R315		Same as R310.	V305 grid divider
R316		Same as R312.	V305 grid divider
R317		Same as R307.	V305 plate load
R318		Same as R314.	V305 cathode bias
R319		Same as R310.	V306 grid divider
R320		Same as R312.	V306 grid divider
R321		Same as R307.	V306 plate load
R322		Same as R314.	V306 cathode bias
R323		Same as R307.	T301 secondary load
R324	B	RESISTOR, FIXED, COMPOSITION: 100 ohms, ±5%; 1/2 w; F characteristic; body 0.416 in. max lg by 0.161 in. max od; insulated; Spec MIL-R-11A, MIL type RC20BF101J; Hazeltine Elec (contr) part 280-1015P37; (same as R229).	Coho input termination
R325	B	RESISTOR, FIXED, COMPOSITION: 10,000 ohms, ±5%; 1/2 w; F characteristic; body 0.416 in. max lg by 0.161 in. max od; insulated; Spec MIL-R-11A, MIL type RC20BF103J; Hazeltine Elec (contr) part 280-1015P109; (same as R109).	CR301 load
R326		Same as R307.	Detector load
R327		Same as R325.	CR302 load
R328		Not used.	
R329	B	RESISTOR, FIXED, COMPOSITION: 6800 ohms, ±5%; 1 w; F characteristic; body 0.760 in. max lg by 0.264 in. max od; insulated; Spec MIL-R-11A, MIL type RC30BF682J; Hazeltine Elec (contr) part 280-1002P103.	V307 plate load
R330		Same as R302.	V307 cathode bias
R331		Same as R325.	Noise metering resistor
R332		Same as R307.	V301 grid decoupling
R333 and R334		Not used.	
R335		Same as R307.	T302 secondary load
R336		Same as R325.	CR304 load

TABLE 8-3. MAINTENANCE PARTS LIST — Cont'd.

REF. DESIG.	NOTES	NAME AND DESCRIPTION	LOCATING FUNCTION
R337		Same as R312.	V308 grid divider
R338		Same as R310.	V308 grid divider
R339		Same as R307.	V308 plate load
R340		Same as R314.	V308 cathode bias
R341 thru R349		Not used.	
R350		Same as R301.	Coho sync termination
R351	B	RESISTOR, FIXED, COMPOSITION: 33,000 ohms, ±5%; 1 w; F characteristic; body 0.760 in. max lg by 0.264 in. max od; insulated; Spec MIL-R-11A, MIL type RC30BF333J; Hazeltine Elec (contr) part 280-1002P127.	V350 cathode divider
R352		Same as R302.	V350 cathode bias
R353	B	RESISTOR, FIXED, COMPOSITION: 1500 ohms, ±5%; 1/2 w; F characteristic; body 0.416 in. max lg by 0.161 in. max od; insulated; Spec MIL-R-11A, MIL type RC20BF152J; Hazeltine Elec (contr) part 280-1015P79; (same as R120).	V350 plate load
R354		Same as R353.	V351 plate load
R355		Same as R302.	V351 cathode bias
R356		Same as R302.	V352 cathode bias
R357		Same as R307.	V353 grid bias
R358		Same as R303.	V353 plate load
R359		Same as R302.	V353 screen decoupling
R360		Same as R302.	V354 cathode bias
R1301		Same as R325.	V1301 grid bias
R1302		Same as R303.	Delay amplifiers input termination
R1303		Same as R302.	V1301 screen decoupling
R1304		Same as R353.	V1301 plate load
R1305		Same as R302.	V1301 cathode bias
V1306		Same as R325.	V1301 grid decoupling
R1307		Same as R302.	V1302 screen decoupling
R1308		Same as R353.	V1302 plate load
R1309		Same as R302.	V1302 cathode bias
R1310		Same as R325.	V1302 grid decoupling

TABLE 8-3. MAINTENANCE PARTS LIST — Cont'd.

REF. DESIG.	NOTES	NAME AND DESCRIPTION	LOCATING FUNCTION
R1311		Same as R302.	V1303 screen decoupling
R1312		Same as R353.	V1303 plate load
R1313		Same as R302.	V1303 cathode bias
R1314		Same as R325.	V1303 grid decoupling
R1315	B	RESISTOR, FIXED, COMPOSITION: 220 ohms, ±5%; 1 w; F characteristic; body 0.760 in. max lg by 0.264 in. max od; Spec MIL-R-11A; MIL type RC30BF221J; Hazeltine Elec (contr) part 280-1016P49.	V1304 screen decoupling
R1316		Same as R303.	V1304 plate load
R1317		Same as R302.	V1304 cathode bias
R1318		Same as R325.	V1304 grid decoupling
R1319		Same as R307.	V1305 plate load
R1320		RESISTOR, FIXED, COMPOSITION: 150 ohms, ±5%; 1/2 w; F characteristic; body 0.416 in. max lg by 0.161 in. max od; insulated; Spec MIL-R-11A, MIL type RC20BF151J; Hazeltine Elec (contr) part 280-1015P43; (same as R129).	V1305 cathode bias
R1321		RESISTOR, FIXED, COMPOSITION: 68 ohms, ±5%; 1 w; F characteristic; 0.591 in. max lg by 0.235 in. max od; Spec MIL-R-11A; MIL type RC30BF680J; Hazeltine Elec (contr) part 280-1016P31.	+150 volt decoupling
R1322		Same as R325.	T1301 secondary load
R1323		Same as R312.	Delay amplifier
R1324	B	RESISTOR, FIXED, COMPOSITION: 22,000 ohms, ±5%; 1/2 w; F characteristic; body 0.416 in. max lg by 0.161 in. max od; insulated; Spec MIL-R-11A, MIL type RC20BF223J; Hazeltine Elec (contr) part 280-1015P121; (same as R128).	Delay amplifier video decoupling
R1325		Same as R307.	Delay amplifier video decoupling
R1326 thru R1349		Not used.	
R1350	B	RESISTOR, FIXED, COMPOSITION: 330,000 ohms, ±5%; 1/2 w; F characteristic; body 0.416 in. max lg by 0.161 in. max od; insulated; Spec MIL-R-11A, MIL type RC20BF334J; Hazeltine Elec (contr) part 280-1015P163; (same as R647).	V1350 grid differentiating
R1351	B	RESISTOR, FIXED, COMPOSITION: 33,000 ohms, ±5%; 1/2 w; F characteristic; body 0.416 in. max lg by 0.161 in. max od; insulated; Spec MIL-R-11A, MIL type RC20BF333J; Hazeltine Elec (contr) part 280-1015P127; (same as R133).	V1350 screen dropping
R1352		Same as R312.	V1350 plate load

TABLE 8-3. MAINTENANCE PARTS LIST — Cont'd.

REF. DESIG.	NOTES	NAME AND DESCRIPTION	LOCATING FUNCTION
R1353		Same as R1350.	V1351 grid
R1354		Same as R1350.	V1351 cathode divider
R1355		Same as R1324.	V1351 cathode bias
R1356	B	RESISTOR, FIXED, COMPOSITION: 4700 ohms, ±5%; 1/2 w; F characteristic; body 0.416 in. max lg by 0.161 in. max od; insulated; Spec MIL-R-11A, MIL type RC20BF472J; Hazeltine Elec (contr) part 280-1015P97; (same as R131).	V1352 plate load
R1357		Same as R312.	V1352 cathode bias
R1358		Same as R312.	V1352 grid
R1359	B	RESISTOR, FIXED, COMPOSITION: 1 meg, ±5%; 1/2 w; F characteristic; body 0.416 in. max lg by 0.161 in. max od; insulated; Spec MIL-R-11A, MIL type RC20BF105J; Hazeltine Elec (contr) part 280-1015P181; (same as R106).	V1353 grid
R1360		Same as R305.	V1353 cathode bias
R1361		Same as R1351.	V1353 plate load
R1362	B	RESISTOR, FIXED, COMPOSITION: 2.2 meg, ±5%; 1/2 w; F characteristic; body 0.416 in. max lg by 0.161 in. max od; insulated; Spec MIL-R-11A, MIL type RC20BF225J; Hazeltine Elec (contr) part 280-1015P193; (same as R633).	V1353 grid
R1363		Same as R314.	V1354 screen
R1364		Same as R1362.	V1354 grid
R1365	B	RESISTOR, VARIABLE: composition; 1 section, 50,000 ohms, ±10%; 2 w; std A taper; body and case material per Spec JAN-R-94, inclosed, 1-3/32 in. max dia by 21/32 in. max depth; single rd metal shaft 1/4 in. dia by 7/8 in. lg from mtg surface, 0.047 in. w by 0.063 in. deep slot; Spec JAN-R-94, type RV4ATSD503A; Hazeltine Elec (contr) part 240-1004P17; (same as R416).	Carrier gate length control
R1366		Same as R312.	V1354 plate charging
R1367		Same as R302.	+150 volt decoupling
R1368		Same as R312.	V1355 grid
R1369		Same as R312.	V1355 signal grid
R1370		RESISTOR, FIXED, COMPOSITION: 470 ohms, ±5%; 1/2 w; F characteristic; body 0.416 in. max lg by 0.161 in. max od; insulated; Spec MIL-R-11A, MIL type RC20BF471J; Hazeltine Elec (contr) part 280-1015P61; (same as R459).	V1355 cathode bias
R1371		Same as R353.	V1355 plate decoupling

TABLE 8-3. MAINTENANCE PARTS LIST — Cont'd.

REF. DESIG.	NOTES	NAME AND DESCRIPTION	LOCATING FUNCTION
R1372	B	RESISTOR, FIXED, COMPOSITION: 680 ohms, ±5%; 1/2 w; F characteristic; body 0.416 in. max lg by 0.161 in. max od; insulated; Spec MIL-R-11A, MIL type RC20BF681J; Hazeltine Elec (contr) part 280-1015P67.	V1355 plate load
R1373		Same as R325.	V1355 screen
R1374		Same as R305.	V1356 plate load
R1375		Same as R302.	V1356 cathode bias
R1376		Same as R1367.	V1357 plate decoupling
R1377		Same as R1351.	V1356 cathode divider
R1378		Same as R1320.	V1357 cathode bias
R1379		Same as R307.	V1357 plate load
R1380		Same as R302.	V1357 output divider
R1381		Same as R305.	Carrier out metering divider
R1382		Same as R302.	Carrier out metering divider
R1383		Same as R305.	Carrier out metering load
R1384		Same as R1367.	+150 volt decoupling
R1385		Same as R353.	V1357 output divider
R2301		Same as R1367.	Undelayed amplifier input termination
R2302		Same as R1351.	Undelayed amplifier input divider
R2303		Same as R324.	Undelayed amplifier input divider
R2304		Same as R325.	V2301 grid
R2305		Same as R302.	V2301 screen
R2306		Same as R353.	V2301 plate load
R2307		Same as R302.	V2301 cathode bias
R2308		Same as R325.	V2301 grid decoupling
R2309		Same as R302.	V2302 screen
R2310		Same as R353.	V2302 plate load
R2311		Same as R302.	V2302 cathode bias

TABLE 8-3. MAINTENANCE PARTS LIST — Cont'd.

REF. DESIG.	NOTES	NAME AND DESCRIPTION	LOCATING FUNCTION
R2312		Same as R325.	V2302 grid decoupling
R2313		Same as R302.	V2303 screen
R2314		Same as R353.	V2303 plate load
R2315		Same as R302.	V2303 cathode bias
R2316		Same as R325.	V2303 grid decoupling
R2317		Same as R1315.	V2304 screen
R2318		Same as R303.	V2304 plate load
R2319		Same as R302.	V2304 cathode bias
R2320		Same as R325.	V2304 grid decoupling
R2321		Same as R307.	V2305 plate load
R2322		Same as R1320.	V2305 cathode bias
R2323		Same as R1321.	+150 volt decoupling
R2324		Same as R325.	T2301 secondary load
R2325		Same as R312.	Non-delay amplifier output metering
R2326		Same as R307.	Non-delay amplifier output metering
R2327 thru R2340		Not used.	
R2350		RESISTOR, VARIABLE: composition; 1 section, 2500 ohms, ±10%; 2 w nom power rating; std A taper; inclosed, body and case material per Spec MIL-R-94A, case 1-3/32 in. max dia by 21/32 in. max deep; single 1/4 in. dia slotted metal shaft by 7/8 in. lg from mtg surface; Spec MIL-R-94A, JAN type RV4ATSD252A; Hazeltine Elec (contr) part 240-1004P9.	IF amplifier level control
R2351		Same as R1365.	Coho level control
R2352		Same as R2350.	Delay line input control
R2353		Same as R2350.	Non-delay amplifier output control
R2354		Same as R1365.	Amplitude balance control, local
R2355		Same as R2350.	Coho sync control

TABLE 8-3. MAINTENANCE PARTS LIST — Cont'd.

REF. DESIG.	NOTES	NAME AND DESCRIPTION	LOCATING FUNCTION
R2356		Same as R1365.	MTI balance control
R2357		Same as R1370	W2351 terminating resistor
R2358		Same as R310.	Coho level metering divider
R2359		Same as R325.	Z2350 divider
R2360		Same as R324.	Z2350 divider
R2361		Same as R325.	Z2350 divider
R2362		Same as R351.	IF gain control divider
R2363		Same as R305.	Coho level metering divider
R2364		Same as R351.	Non-delay amplifier gain control divider
R3301		Same as R1370.	Non-delay amplifier video load
R3302		Same as R1372.	MTI video balancing
R3303		Same as R1370.	MTI video balancing
R3304		RESISTOR, FIXED, COMPOSITION: 470,000 ohms, ±5%; 1/2 w; F characteristic; body 0.416 in. max lg by 0.161 in. max od; insulated; Spec MIL-R-11A, MIL type RC20BF474J; Hazeltine Elec (contr) part 280-1015P169; (same as R132).	V3305A grid
R3305		Same as R325.	V3303 plate load
R3306		Same as R2350.	MTI video gain V3303
R3307		Same as R302.	V3303 cathode bias
R3308		Same as R1350.	V3303 grid
R3309		Same as R1324.	V3301 plate load
R3310		Same as R1356.	V3301 cathode bias
R3311		RESISTOR, FIXED, COMPOSITION: 39 ohms, ±5%; 1/2 w; F characteristic; Spec MIL-R-11A, MIL type RC20BF390J; Hazeltine Elec (contr) part 280-1015P22.	V3301 cathode bias
R3312		Same as R1324.	V3301 plate load
R3313		Same as R1350.	V3302 AGC filter
R3314		Same as R1350.	V3302 dropping
R3315		Same as R1356.	V3304 plate load
R3316		Same as R1359.	V3304 grid
R3317		Same as R324.	V3304 cathode bias

TABLE 8-3. MAINTENANCE PARTS LIST — Cont'd.

REF. DESIG.	NOTES	NAME AND DESCRIPTION	LOCATING FUNCTION
R3318		Same as R1356.	V3304 cathode load
R3319	B	RESISTOR, FIXED, COMPOSITION: 15,000 ohms, ±5%; 1/2 w; F characteristic; body 0.416 in. max lg by 0.161 in. max od; insulated; Spec MIL-R-11A, MIL type RC20BF153J; Hazeltine Elec (contr) part 280-1015P115; (same as R644).	V3304 cathode differentiating
R3320		Same as R3319.	V3304 plate
R3321		Same as R1324.	CR3300 and CR3301 output load
R3322		Same as R305.	V3305A plate load
R3323		Same as R3304.	V3306 grid
R3324	B	RESISTOR, FIXED, COMPOSITION: 390,000 ohms, ±5%; 1/2 w; F characteristic; body 0.416 in. max lg by 0.161 in. max od; insulated; Spec MIL-R-11A, MIL type RC20BF394J; Hazeltine Elec (contr) part RC20BF394J.	V3305A plate load
R3325	B	RESISTOR, FIXED, COMPOSITION: 150,000 ohms, ±5%; 1/2 w; F characteristic; body 0.416 in. max lg by 0.161 in. max od; insulated; Spec MIL-R-11A, MIL type RC20BF154J; Hazeltine Elec (contr) part 280-1015P151; (same as R1690).	V3306 grid
R3326		Not used.	
R3327		Same as R305.	V3306 grid
R3328		Same as R2350.	V3306 grid bias
R3329		Same as R302.	V3311B cathode
R3330		Same as R307.	V3306 plate load
R3331		RESISTOR, FIXED, COMPOSITION: 10,000 ohms, ±5%; 1 w; F characteristic; body 0.760 in. max lg by 0.264 in. max od; insulated; Spec MIL-R-11A, MIL type RC30BF103J; Hazeltine Elec (contr) part 280-1002P109; (same as R118).	V3306 screen
R3332		Same as R3331.	V3307 screen
R3333		Not used.	
R3334		Same as R3304.	V3307 control grid bias divider
R3335		Same as R305.	+150 volt decoupling
R3336		Same as R3325.	V3307 control grid bias
R3337		Same as R3304.	V3311B grid
R3338		Same as R302.	Plate to screen parasitic suppressor for V3304

TABLE 8-3. MAINTENANCE PARTS LIST — Cont'd.

REF. DESIG.	NOTES	NAME AND DESCRIPTION	LOCATING FUNCTION
R3339		Same as R307.	V3307 control grid bias
R3340		RESISTOR, FIXED, COMPOSITION: 1200 ohms, ±5%; 1/2 w; F characteristic; body 0.416 in. max lg by 0.161 in. max od; Spec MIL-R-11A; MIL type RC20BF122J; Hazeltine Elec (contr) part 280-1015P76.	V3311B plate load
R3341		Same as R310.	CR3303 cathode
R3342		Same as R1365.	CR3303 limit
R3343		Same as R310.	CR3302 cathode
R3344		Same as R312.	CR3302 and CR3303 plate
R3345	B	RESISTOR, FIXED, COMPOSITION: 3900 ohms, ±5%; 1/2 w; F characteristic; body 0.416 in. max lg by 0.161 in. max od; insulated; Spec MIL-R-11A, MIL type RC20BF392J; Hazeltine Elec (contr) part 280-1015P94.	V3309 grid bias
R3346		Same as R3325.	V3309 grid bias
R3347		Same as R312.	V3309 control grid
R3348		Same as R324.	V3309 grid
R3349		Not used.	
R3350		Same as R324.	V3308 control grid
R3351		Same as R1367.	V3309 screen grid
R3352		Same as R1367.	V3308 screen grid
R3353		RESISTOR, FIXED, COMPOSITION: 220 ohms, ±5%; 1 w; F characteristic; body 0.760 in. max lg by 0.264 in. max od; insulated; Spec MIL-R-11A, MIL type RC30BF221J; Hazeltine Elec (contr) part 280-1002P49; (same as R162).	V3309 cathode
R3354		Same as R314.	V3308 cathode
R3355		Same as R3304.	V3305B grid
R3356		Same as R305.	V3305B cathode
R3357		Same as R305.	V3305B plate load
R3358		Same as R3324.	V3305B plate load
R3359		Not used.	
R3360		Same as R1356.	V3310 cathode
R3361 and R3362		Not used.	
R3363		Same as R1351.	V3310 cathode

TABLE 8-3. MAINTENANCE PARTS LIST — Cont'd.

REF. DESIG.	NOTES	NAME AND DESCRIPTION	LOCATING FUNCTION
R3364	B	RESISTOR, FIXED, COMPOSITION: 3.9 meg, ±5%; 1/2 w; F characteristic; body 0.416 in. max lg by 0.161 in. max od; insulated; Spec MIL-R-11A, MIL type RC20BF395J; Hazeltine Elec (contr) part 280-1015P202.	V3312 control grid
R3365	B	RESISTOR, FIXED, COMPOSITION: 220,000 ohms, ±5%; 1/2 w; F characteristic; body 0.416 in. max lg by 0.161 in. max od; insulated; Spec MIL-R-11A, MIL type RC20BF224J; Hazeltine Elec (contr) part 280-1015P157; (same as R640).	V3312 plate
R3366		Same as R3325.	V3312 screen bias
R3367		Same as R312.	V3312 screen grid
R3368		Not used.	
R3369		Same as R3331.	V3312 screen grid
R3370		Same as R3365.	V3311A grid
R3371		Same as R1350.	V3311A grid
R3372		Same as R1351.	V3311A plate load
R3373		Same as R1351.	V3306 suppressor grid
R3374		Same as R312.	V3306 suppressor grid
R3375		Same as R1324.	V3311A cathode
R3376		Same as R3325.	V3311A cathode
R3377 thru R3379		Not used.	
R3380		Same as R302.	+150 volt decoupling
R3381		Same as R1367.	V3308 plate load
S2350		Not used.	
S2351		SWITCH, THERMOSTATIC: spst, double break; contacts open on temp increase, opens at 15 deg C, closes at 0 deg C; bi-metal element; rated 8 amp, 125 v ac or 10 amp, 30 v dc; non-inductive; 0.750 in. max lg by 0.345 in. w by 1-1/64 in. h over-all; Stevens Mfg Co (mfr) type M; Hazeltine Elec (contr) part 271-1091P2; (same as S155).	Delay line heater control
S2352		SWITCH, THERMOSTATIC: spst, double break; contacts close on temp increase, closes at 25 ±3 deg C, opens at 15 deg C max below closing temp; bi-metal element; rated 8 amp, 125 v ac or 10 amp, 30 v dc non-inductive; 0.750 in. max lg by 0.345 in. w by 1-1/64 in. h over-all; Stevens Mfg Co (mfr) type M; Hazeltine Elec (contr) part 271-1091P3; (same as S154).	B2350 control
S2353		SWITCH, ROTARY: sectional type, 2 sections; 6 positions, max number of switching positions possible; non-pile-up type, 2 moving contacts, 12 fixed contacts, no dummy terminals used, 2 poles; non-shorting type contacts; 1-9/16 in. max lg by 1-5/8 in. w by 1-7/8 in. h; flatted shaft 7/8 in. lg from mtg surface by 1/4 in. dia; Hazeltine Elec (mfr and contr) part 1590-1036P1.	Test meter selector

TABLE 8-3. MAINTENANCE PARTS LIST — Cont'd.

REF. DESIG.	NOTES	NAME AND DESCRIPTION	LOCATING FUNCTION
S2354		SWITCH, ROTARY: sectional type, 3 sections; 4 positions max number of switching positions possible; non-pile-up type, 6 moving contacts, 24 fixed contacts, no dummy terminals used, 6 poles; non-shorting type contacts; 2-1/16 in. max lg by 1-5/8 in. w by 1-7/8 in. h; flatted shaft 7/8 in. lg from mtg surface by 1/4 in. dia; Hazeltine Elec (mfr and contr) part 1590-1116P1.	Operation selector
S2355		SWITCH, PUSH-PULL: spdt; rated 10 amp, 125 v ac; non-locking action when actuator is pushed; locking action when actuator is pulled; approx 1-61/64 in. lg by 1-9/16 in. w by 33/64 in. h over-all; Micro Switch Corp (mfr) type 2AC1; Hazeltine Elec (contr) part 228-1038P1; (same as S603).	B2350 interlock
T301		TRANSFORMER, RADIO FREQUENCY: 60 mc design peak frequency; 2 windings; ea winding 0.67 uh ±1% at 15.9 mc; 12 turns no. 33 AWG heavy formex wire; 0.13 ohm dc resistance; secondary center tapped; 1-1/4 in. lg by 5/8 in. w by approx 21/32 in. h over-all; Hazeltine Elec (mfr and contr) part 375-1180G1.	V308 output transformer
T302		Same as T301.	V306 output transformer
T1301		TRANSFORMER, RADIO FREQUENCY: tuning; 2 windings single layer wound; unshielded; primary 32 turns no. 35 AWG heavy formex wire; center tapped; secondary 32 turns no. 35 AWG heavy formex wire; 1-1/4 in. lg by 5/8 in. w by 45/64 in. h over-all; powdered iron core form; form 0.255 in. dia on 1 in. mtg center; 7 turret type term located on bottom; varnish impregnated, fungus proof; Hazeltine Elec (mfr and contr) part 375-1188G1.	V1305 output transformer
T2301		Same as T1301.	V2305 output transformer
T2302 thru T2349		Not used.	
T2350		TRANSFORMER, POWER, STEP-DOWN: hermetically sealed metal case, fully inclosed; primary 115 v, 400 cycles; single phase; secondary 6.3 v, 13.5 amp; 1780 v rms insulation; air cooled; impregnated and wax filled; 2-7/8 in. lg by 2-5/8 in. w by 3-7/8 in. h excluding terminals and mtg studs; Spec MIL-T-27; Hazeltine Elec (mfr and contr) part TR-1562.	Filament transformer
TB301	C	TERMINAL BOARD: nylon base laminated thermosetting plastic board; incl 49 stud type terminals; 6-1/8 in. lg by 3-15/16 in. w by 1/8 in. thk excluding terminals; Hazeltine Elec (mfr and contr) part A18831.	Panel "C" terminations
TB302	C	TERMINAL BOARD: nylon base laminated thermosetting plastic board; incl 101 stud type terminals; 13 in. lg by 4 in. w by 1/8 in. thk excluding terminals; Hazeltine Elec (mfr and contr) part A18858.	Panel "A" terminations
TP301	B	CONNECTOR, RECEPTACLE, ELECTRICAL: one female contact; one connector mating end; plain coaxial; 50 ohms nom impedance; low loss plastic dielectric; straight shape; 1-3/32 in. max lg by 11/16 in. w by 11/16 in. h over-all; w/partially inclosing copper base alloy shell, resistant to corrosion, precious metal plated; bayonet latch locking type; 0.212 in. dia max size cable accommodated; 4 mtg holes no. 3-56 NF-2 thd mtg holes on 1/2 in. by 1/2 in. mtg centers; Spec MIL-C-3608, type UG-291/U; Navy dwg RE49F246; Hazeltine Elec (contr) part 276-1175P1.	Video test receptacle

TABLE 8-3. MAINTENANCE PARTS LIST — Cont'd.

REF. DESIG.	NOTES	NAME AND DESCRIPTION	LOCATING FUNCTION
V301		ELECTRON TUBE: glass envelope; sharp cut-off rf pentode; Spec MIL-E-1C, MIL type 5654/6AK5W; Hazeltine Elec (contr) part 5654/6AK5W.	1st IF amplifier
V302		Same as V301.	2nd IF amplifier
V303		Same as V301.	3rd IF amplifier
V304		Same as V301.	4th IF amplifier
V305		Same as V301.	5th IF amplifier
V306		Same as V301.	6th IF amplifier
V307		Same as V301.	Noise meter amplifier
V308		Same as V301.	7th IF amplifier
V309 thru V349		Not used.	
V350		Same as V301.	1st coho sync amplifier
V351		Same as V301.	2nd coho sync amplifier
V352		Same as V301.	3rd coho sync amplifier
V353		Same as V301.	Coho oscillator
V354		Same as V301.	Coho oscillator
V1301		Same as V301.	1st delay IF amplifier
V1302		Same as V301.	2nd delay IF amplifier
V1303		Same as V301.	3rd delay IF amplifier
V1304		Same as V301.	4th delay IF amplifier
V1305		ELECTRON TUBE: glass envelope; reliable miniature beam power amplifier tetrode; Spec MIL-E-1C, MIL type 6005/6AQ5W; Hazeltine Elec (contr) part 6005/6AQ5W.	5th delay IF amplifier
V1306		ELECTRON TUBE: glass envelope; reliable miniature pentode; Spec MIL-E-1C, MIL type 5726/6AL5W; Hazeltine Elec (contr) part 5726/6AL5W; (same as V106).	Delay amplifier detector
V1307 thru V1349		Not used.	
V1350		ELECTRON TUBE: glass envelope; reliable miniature rf pentode, sharp cutoff; Spec MIL-E-1C, MIL type 6AU6WA; Hazeltine Elec (contr) part 6AU6WA.	Trigger amplifier
V1351		Same as V1350.	Timing amplifier
V1352		Same as V1305.	Modulator trigger amplifier

TABLE 8-3. MAINTENANCE PARTS LIST — Cont'd.

REF. DESIG.	NOTES	NAME AND DESCRIPTION	LOCATING FUNCTION
V1353		ELECTRON TUBE: glass envelope; medium mu twin triode; Spec MIL-E-1C, MIL type 5814A; Hazeltine Elec (contr) part 5814A; (same as V105).	Modulator trigger delay and multivibrator
V1354		Same as V1350.	Multivibrator
V1355		ELECTRON TUBE: glass envelope; reliable miniature pentagrid converter; Spec MIL-E-1C, MIL type 5750/6BE6W; Hazeltine Elec (contr) part 5750/6BE6W.	Mixer
V1356		Same as V301.	Carrier amplifier gain control
V1357		Same as V1305.	Carrier amplifier output control
V2301		Same as V301.	1st non-delay IF amplifier
V2302		Same as V301.	2nd non-delay IF amplifier
V2303		Same as V301.	3rd non-delay IF amplifier
V2304		Same as V301.	4th non-delay IF amplifier
V2305		Same as V1305.	5th non-delay IF amplifier
V2306		Same as V1306.	Delay amplifier detector
V3300		ELECTRON TUBE: glass envelope; reliable miniature voltage regulator; Spec MIL-E-1C, MIL type OB2WA; Hazeltine Elec (contr) part OB2WA.	Voltage regulator
V3301		Same as V1353.	AGC amplifier
V3302		Same as V3300.	AGC amplifier coupling
V3303		Same as V301.	MTI video amplifier
V3304		Same as V301.	MTI video phase inverter
V3305		ELECTRON TUBE: glass envelope; twin triode, miniature; Spec MIL-E-1C, MIL type 12AT7WA; Hazeltine Elec (contr) part 12AT7WA.	MTI video limiting amplifier
V3306		ELECTRON TUBE: glass envelope; dual control sharp cut-off rf pentode; Spec MIL-E-1C, MIL type 5725/6AS6W; Hazeltine Elec (contr) part 5725/6AS6W.	Normal video limiting amplifier
V3307		Same as V3306.	Indicator video output
V3308		ELECTRON TUBE: metal envelope; pentode, power amplifier; Spec MIL-E-1C, MIL type 6AG7; Hazeltine Elec (contr) part 6AG7; (same as V103).	Remote video output

TABLE 8-3. MAINTENANCE PARTS LIST — Cont'd.

REF. DESIG.	NOTES	NAME AND DESCRIPTION	LOCATING FUNCTION
V3309		Same as V3308.	Cathode follower
V3310		Same as V1353.	Trigger diode and cathode follower
V3311		Same as V3305.	Amplifier and gate output
V3312		Same as V3306.	Phantastron
W2301 thru W2349		Not used.	
W2350		DELAY LINE: electrostrictive type; 2500 μsec ±10% μsec time delay at 20 deg C; 9 mc ±0.5 mc driving frequency at 20 deg C; 15-7/16 in. dia by 1.20 in. max h over-all excluding connector; Hazeltine Elec (mfr and contr) part DL-1071.	Delay line
W2351		NETWORK, PULSE DELAY: c/o 2 series connected coils, ea approx 1270 turns no. 38 AWG heavy formex insulated wire wound on glass rod and mounted in a hermetically sealed, dry nitrogen filled metal case; delay time, one direction 1.9 usec ±10%; input and output characteristic impedance 470 ohms ±10%; 120 ohms ±15% dc resistance; 42 μμf ±20% input and output capacity; ambient operating temp -50 to +60 deg C; 9-1/2 in. max lg by 2-3/8 in. max w by 1-1/16 in. max h over-all; 2 slotted mtg holes 3/8 in. lg by 5/32 in. w on 9-1/16 in. max mtg centers; Hazeltine Elec (mfr and contr) part 363-1114G1.	Video delay line for delayed channel
W2352		Not used.	
W2353	D	CABLE ASSEMBLY, RADIO FREQUENCY: coaxial; 93 ohms nom impedance; inner conductor 0.0253 in. dia solid copper covered steel wire, air-spaced polyethylene dielectric; single braid copper shield synthetic resin covering; AN type RG-62/U cable; approx 6-1/2 in. lg over-all, approx 4-1/2 in. lg excluding terminations; 0.242 in. dia over-all cross-section of cable; one AN type UG-260/U Connector, Plug on ea end; marked "P351" and "P308"; Hazeltine Elec (mfr and contr) part 1590-5018G8.	Coho IF coupling
W2354		CABLE, RADIO FREQUENCY: coaxial; 93 ohms nom impedance; 13.5 μμf nom capacitance per ft; 750 v rms max operating voltage; 3000 v rms min dielectric test voltage; one inner conductor, 0.0253 in. dia solid copper covered steel wire; air-spaced polyethylene dielectric; single braid copper outer conductor; low-temp non-contaminating synthetic resin jacket; 0.242 in. dia over-all; Spec MIL-C-17B, type RG-62A/U; Hazeltine Elec (contr) part 273-1027P2; (p/o W2357 and W2358; same as W513).	Internal wiring
W2355		CABLE, RADIO FREQUENCY: coaxial; 75 ohms nom impedance; 21 μμf nom capacitance per ft; 2300 v rms max operating voltage; 7000 v rms min dielectric test voltage; one inner conductor, 0.0230 in. dia solid copper covered steel wire; solid polyethylene dielectric; single braid copper outer conductor; low temp non-contaminating synthetic resin jacket; 0.242 in. dia over-all; Spec MIL-C-17B, type RG-59A/U; Hazeltine Elec (contr) part 273-1023P2; (same as W511).	Internal wiring

TABLE 8-3. MAINTENANCE PARTS LIST — Cont'd.

REF. DESIG.	NOTES	NAME AND DESCRIPTION	LOCATING FUNCTION
W2356	B	CABLE, RADIO FREQUENCY: coaxial; 52 ohms nom impedance; 28.5 $\mu\mu$f nom capacitance per ft; 1900 v rms max operating voltage; 5000 v rms min dielectric test voltage; one inner conductor c/o 19 strands of no. 33 AWG tinned copper wire; solid polyethylene dielectric; single braid tinned copper outer conductor; synthetic resin jacket; 0.195 in. dia over-all; Spec MIL-C-17B, type RG-58A/U; Hazeltine Elec (contr) part 273-1022P2; (same as W512).	Internal wiring
W2357	D	CABLE ASSEMBLY, RADIO FREQUENCY: c/o 2 coaxial cables secured by insulating sleeve; ea 93 ohms nom impedance; inner conductor 0.0253 in. dia solid copper covered steel wire, air-spaced polyethylene dielectric; single braid copper shield; synthetic resin jacket; AN type RG-62A/U cable; approx 26-3/4 in. lg over-all, approx 25-3/4 in. lg excl terminations; 0.242 in. dia over-all cross-section of cable; one AN type UG-260/U connector plug on end; marked "P1350" and "P2350"; Hazeltine Elec (mfr and contr) part/dwg A-19496.	For W2350
W2357A	E	CABLE ASSEMBLY, RADIO FREQUENCY: coaxial, 93 ohms nom impedance; inner conductor 0.0253 in. dia solid copper covered steel wire, air-spaced polyethylene dielectric; single braid copper shield; synthetic resin jacket; Spec MIL-C-17B, AN type RG-67/U cable; approx 26-3/4 in. lg over-all; approx 25-3/4 in. lg excl terminations; 0.242 in. dia over-all cross-section of cable; one AN type UG-260/U connector plug on ea end; marked "P1350" and "P2350"; (p/o W2357; for reference only).	Carrier output connection to Delay Line input
W2357B	E	CABLE ASSEMBLY, RADIO FREQUENCY: coaxial, 93 ohms nom impedance, inner conductor 0.0253 in. dia solid copper covered steel wire, air-spaced polyethylene dielectric; single braid copper shield; synthetic resin jacket; Spec MIL-C-17B, AN type RG-62A/U cable; approx 27-3/4 in. lg over-all; approx 26-3/4 in. lg excluding terminations; 0.242 in. dia over-all cross-section of cable; one AN type UG-260/U connector plug on ea end; marked "P1301" and "P2351"; (p/o W2357; for reference only).	Delay line output connection to Delay Amplifier input
XV301	B	SOCKET, ELECTRON TUBE: type E miniature 7 pin contact configuration; no contacts missing; molded low loss composition body; requires rd shaped plain body accommodation hole to clear 0.625 in. od metal shield base; two 1/8 in. dia mtg holes spaced 7/8 in. c to c; provision for mtg bayonet type electron tube shield provided; electron tube retaining device not incl; Spec JAN-S-28A, type TS102P01, Hazeltine Elec (contr) part TS102P01; (same as XV106).	Socket for V301
XV302		Same as XV301.	For V302
XV303		Same as XV301.	For V303
XV304		Same as XV301.	For V304
XV305		Same as XV301.	For V305
XV306		Same as XV301.	For V306
XV307		Same as XV301.	For V307
XV308		Same as XV301.	For V308
XV309 thru XV349		Not used.	

TABLE 8-3. MAINTENANCE PARTS LIST — Cont'd.

REF. DESIG.	NOTES	NAME AND DESCRIPTION	LOCATING FUNCTION
XV350		Same as XV301.	For V350
XV351		Same as XV301.	Socket for V351
XV352		Same as XV301.	Socket for V352
XV353		Same as XV301.	Socket for V353
XV354		Same as XV301.	Socket for V354
XV1301		Same as XV301.	Socket for V1301
XV1302		Same as XV301.	Socket for V1302
XV1303		Same as XV301.	Socket for V1303
XV1304		Same as XV301.	Socket for V1304
XV1305		Same as XV301.	Socket for V1305
XV1306		Same as XV301.	Socket for V1306
XV1307 thru XV1349		Not used.	
XV1350		Same as XV301.	Socket for V1350
XV1351		Same as XV301.	Socket for V1351
XV1352		Same as XV301.	Socket for V1352
XV1353		SOCKET, ELECTRON TUBE: noval contact configuration; no contacts missing; molded low loss composition body; rd shaped plain body accommodation hole required to clear 47/64 in. max dia body, clinch type mtg, two mtg holes 0.125 in. dia spaced 1.125 in. c to c; provisions for mtg bayonet type electron tube shield provided; electron tube retaining device not incl; Spec JAN-S-28A, JAN type TS103P01; Hazeltine Elec (contr) part 282-1002P2; (same as XV105).	Socket for V1353
XV1354		Same as XV301.	Socket for V1354
XV1355		Same as XV301.	Socket for V1355
XV1356		Same as XV301.	Socket for V1356
XV1357		Same as XV301.	Socket for V1357
XV2301		Same as XV301.	Socket for V2301
XV2302		Same as XV301.	Socket for V2302
XV2303		Same as XV301.	Socket for V2303
XV2304		Same as XV301.	Socket for V2304
XV2305		Same as XV301.	Socket for V2305
XV2306		Same as XV301.	Socket for V2306

TABLE 8-3. MAINTENANCE PARTS LIST — Cont'd.

REF. DESIG.	NOTES	NAME AND DESCRIPTION	LOCATING FUNCTION
XV3300		Same as XV301.	Socket for V3300
XV3301		Same as XV1353.	Socket for V3301
XV3302		Same as XV301.	Socket for V3302
XV3303		Same as XV301.	Socket for V3303
XV3304		Same as XV301.	Socket for V3304
XV3305		Same as XV1353.	Socket for V3305
XV3306		Same as XV301.	Socket for V3306
XV3307		Same as XV301.	Socket for V3307
XV3308		SOCKET, ELECTRON TUBE: octal contact configuration; no contacts missing; molded low loss composition body; rd shaped plain body accommodation hole required to clear 1-7/64 in. max dia body; clinch type mtg; 2 mtg holes 0.156 in. dia spaced 1-1/2 in. c to c; provisions for mtg electron tube shield not provided; electron tube retaining device not incl; Amphenol (mfr) part 77-MIP-8T; Hazeltine Elec (contr) part 282-1003P2; (same as XV101).	Socket for V3308
XV3309		Same as XV3308.	Socket for V3309
XV3310		Same as XV1353.	Socket for V3310
XV3311		Same as XV1353.	Socket for V3311
XV3312		Same as XV301.	Socket for V3312
Z2301 thru Z2349		Not used.	
Z2350		ATTENUATOR, FIXED: capacitive-resistive type; input and output impedance 1000 ohms; 65 db attenuation; approx 2-3/4 in. lg by 1-5/8 in. w by 1-5/16 in. deep over-all; Hazeltine Elec (mfr and contr) part 1590-5013G1.	Pulse delay network test unit
Z2351		FILTER, RADIO INTERFERENCE: terminals A, B, R, and T rated 800 ma at 115 v ac, 400 cycles, terminal C rated 600 ma at +150 v dc, terminal D rated 100 ma at -150 v dc, terminals E, H, and I rated 200 ma at +28 v dc, terminals J and M rated 5 amp at 115 v ac, 400 cycles, terminal NR rated 50 ma at -50 v dc, terminal TR rated 50 ma at -100 v dc, terminal K rated 5 amp at 115 v ac, terminal G grounded to case; hermetically sealed metal case; 6-3/8 in. lg by 3-7/8 in. w by 2-1/4 in. h over-all excluding terminals and receptacle; Televiso Corp (mfr) part 164-147; Hazeltine Elec (contr) part 363-1130P2.	Power input filter
Z2352 thru Z2399		Not used.	
Z3301		FILTER, RADIO INTERFERENCE: 2 amp, 500 v dc, 125 v, 400 cps; hermetically sealed metal case; 1-13/16 in. lg by 1-1/4 in. w by 7/8 in. h over-all; 2 integral mtg ears ea w/mtg hole 3/16 in. dia on 2-1/8 in. mtg center; Astron Corp (mfr) part AF-344; Hazeltine Elec (contr) part 363-1097P1; (same as Z602).	MTI gate generator noise filter

TABLE 8-3. MAINTENANCE PARTS LIST — Cont'd.

REF. DESIG.	NOTES	NAME AND DESCRIPTION	LOCATING FUNCTION
401-499 Series	E	POWER SUPPLY: Army-Navy Power Supply PP-674A/TPS-1D; Hazeltine Elec (mfr and contr) part/dwg A-18870; Navy Spec MIL-R-0015895D(SHIPS) and Amendment 2.	
A401	F	BRACKET, DOUBLE ANGLE: bracket for interlock switch; 0.080 in. thk aluminum, grey enamel finish; rectangular; approx 2-1/2 in. lg by 2-1/8 in. w by 3/16 in. h over-all; 2 mtg holes 0.281 in. dia on 1-3/8 in. mtg centers; marked "S402"; incl 4 holes 0.144 in. dia on 3/4 in. by 5/8 in. switch mtg centers; Hazeltine Elec (mfr and contr) part 1591-1014P1.	Bracket mounting for S402
A402	F	BRACKET, ANGLE: 0.031 in. thk aluminum, anodized; "U" shaped; 1-9/16 in. lg by 3/8 in. w by 11/32 in. h over-all; 3 mtg holes, two 0.169 in. dia, one 5/32 in. dia located in center; Hazeltine Elec (mfr and contr) part 1592-1079P1; (same as A112).	Bracket mounting for S403
A403	F	BRACKET, SWITCH: for toggle switch mtg; 0.080 in. thk aluminum, grey enamel finish; sq; approx 1-7/8 in. lg by 1-7/8 in. w by 1-1/8 in. h over-all; 2 mtg holes 0.196 in. dia on 1-1/4 in. mtg centers; incl keyed hole approx 15/32 in. dia for mtg switch, 4 holes 0.159 in. dia on 1-3/8 in. by 1-5/16 in. centers and slot 3/16 in. w by 1/4 in. lg; Hazeltine Elec (mfr and contr) part 1591-1051P1.	Bracket mounting for S404
A404	F	BRACKET, ANGLE: for filter reactor; 0.078 in. thk stainless steel, passivate finish; "L" shaped; 2-1/4 in. lg by 2-1/4 in. w by 3/4 in. h over-all; 2 mtg holes 0.196 in. dia on 1-3/4 in. mtg centers one leg; 3 mtg holes 0.196 in. dia equally spaced on 1-11/16 in. dia circle, w/center hole 1-3/8 in. dia other leg; marked "L402"; Hazeltine Elec (mfr and contr) part 1591-1027P2.	Mounting for L402
A405	F	BRACKET, ANGLE: for filter reactor; 0.078 in. thk stainless steel, passivate finish; "L" shaped; 2-1/4 in. lg by 2-1/4 in. w by 3/4 in. h over-all; 2 mtg holes 0.196 in. dia on 1-3/4 in. mtg centers one leg; 3 mtg holes 0.196 in. dia equally spaced on 1-9/16 in. dia circle, w/center hole 1-1/4 in. dia other leg; marked "L401"; Hazeltine Elec (mfr and contr) part 1591-1027P1.	Mounting for L401
A406	F	BRACKET, ANGLE: for mtg capacitor; 0.078 in. thk stainless steel, passivate finish, "L" shaped; 1-7/8 in. lg by 1-1/2 in. w by 3/4 in. h over-all; 2 mtg holes 0.196 in. dia on 1 in. mtg centers; one locating hole 29/32 in. dia; marked "C403"; Hazeltine Elec (mfr and contr) part 1591-1026P1.	Mounting for C403
A407		PLATE, MOUNTING, CAPACITOR: MIL type CP07SB4; material and finish per Spec MIL-C-25A, spade type; 3-7/8 in. lg by 29/32 in. max w by 0.045 in. min thk excluding mtg stud; mtg stud no. 10-32 NF by 5/8 in. min lg; Spec MIL-C-25A; Hazeltine Elec (mfr and contr) part 217-1001P10.	Mounting for C401
A408		PLATE, MOUNTING, CAPACITOR: MIL type CP07SD3; material and finish per Spec MIL-C-25A; spade type; 4 in. lg by 1-15/32 in. w by 0.045 in. thk excluding mtg studs; 2 mtg studs no. 10-32 by 5/8 in. min lg on 5/8 in. mtg centers; 3/32 in. lg hook top end; Spec MIL-C-25A; Hazeltine Elec (mfr and contr) part 217-1012P3.	Mounting for C405
A409	F	BRACKET, ANGLE: resistor mtg; 0.050 in. thk steel, cadimum plated; "L" shaped w/hook 5/32 in. lg at top; 1-5/16 in. lg by 9/16 in. w by 1/2 in. deep; mtg ft w/mtg slot 0.234 in. lg by 0.187 in. w; Hazeltine Elec (mfr and contr) part 217-1022P1; (same as A104).	Mounting for R403

TABLE 8-3. MAINTENANCE PARTS LIST — Cont'd.

REF. DESIG.	NOTES	NAME AND DESCRIPTION	LOCATING FUNCTION
A410	F	BRACKET, ANGLE: resistor mtg; 0.050 in. thk steel, cadmium plated; "L" shaped w/hook 5/32 in. lg at top; 1-11/16 in. lg by 3/4 in. w by approx 5/8 in. deep; mtg ft w/mtg slot 0.234 in. lg by 0.187 in. w; Hazeltine Elec (mfr and contr) part 217-1022P2.	Mounting bracket for R402, R404 and R451
A411	E	DOOR, ACCESS, FUSE PANEL: for line fuses; c/o aluminum panel, bracket and hinge, and 3 stainless steel inserts w/no. 8-32 NC-2 female thd; USMC green enamel finish on front surface and edges; 11 in. lg by 5-3/16 in. w by approx 1-5/32 in. h over-all; mounted by five 0.169 in. dia holes in hinge spaced 2-5/8 in. c to c, and three no. 8-32 NC-2 threaded inserts spaced 4-1/2 in. c to c in edge of panel opposite hinge; Hazeltine Elec (mfr and contr) part 1591-1024G1.	For line fuses
A412	A	PLATE, MOUNTING, FUSE: fuseholder; glass cloth melamine resin; rectangular; 11 in. lg by 4-1/2 in. w by 1/8 in. thk over-all; 3 pair mtg holes 0.196 in. dia, ea pair 4-1/8 in. mtg centers; marked "SPARE 60.0 AMP" ; "F412", "F413", "F414", "F415" and "30.0 AMP SPARE"; incl 6 holes 0.196 in. dia, 12 holes 1/8 in. dia, and 6 holes 0.221 in. dia; Hazeltine Elec (mfr and contr) part 1591-1023P1.	Mounting panel for O431 and O432
A413	E	DOOR, ACCESS, TERMINAL BOARD: for trigger terminations; c/o 2 aluminum hinges spot welded to aluminum door; 3-3/8 in. lg by 2-7/8 in. w by approx 11/64 in. h over-all; two 0.196 in. dia mtg holes, one in ea hinge spaced 1-5/8 in. c to c; marked "CAUTION, 200 VOLTS, TRIGGER TERMINATION, SEE INSTRUCTION BOOK" in red; Hazeltine Elec (mfr and contr) part 1591-1036G1.	For trigger terminations
A414		Not used.	
A415		MOUNT, RESILIENT: sq base cup mtg; 22 to 60 lb load rating; 3 in. lg by 3 in. w by 1-1/2 in. h over-all; natural rubber compression cup type, cushion 2-7/8 in. dia by 3/4 in. thk; steel sleeve w/3/8 in.-16 NC-2 thd hole; steel cup type holder, cadmium plated; 4 mtg holes 0.266 in. dia on 2-1/2 in. by 2-1/2 in. mtg centers; incl no. 10-24 NC-2 hole on side of bell; braided ground strap fastened to bell approx 4 in. lg by 1/2 in. w, w/lug on free end for 1/4 in. screw; The Barry Corp (mfr) part Z-2025T6; Hazeltine Elec (contr) part 344-1009P2.	Shock-mount for A418
A416		Not used.	
A417	E	DOOR, ACCESS, TERMINAL BOARD: for heater terminations; c/o 2 aluminum hinges spot welded to aluminum door; 3-3/8 in. lg by 2-7/8 in. w by approx 11/64 in. h over-all; two 0.196 in. dia mtg holes, one in ea hinge spaced 1-5/8 in. c to c; marked "CAUTION, 115 V 400 CYCLES HEATER TRANSFER, SEE INSTRUCTION BOOK" in red; Hazeltine Elec (mfr and contr) part 1591-1036G2.	For heater terminations
A418	E	CASE, POWER SUPPLY: aluminum, anodized and painted USMC green; approx 30-1/2 in. lg by 24-1/4 in. w by 23-1/2 in. h over-all; Hazeltine Elec (mfr and contr) part A-18869G6.	Unit outer case
A419 thru A422		Not used.	

TABLE 8-3. MAINTENANCE PARTS LIST — Cont'd.

REF. DESIG.	NOTES	NAME AND DESCRIPTION	LOCATING FUNCTION
A423	E	COVER, POWER SUPPLY: 28-1/2 in. lg by 24 in. w by 1-1/4 in. deep over-all approx, 26 mtg holes 1/4 in.-20 thd and 2 mtg holes 0.386 in. dia symmetrically spaced around edges; Hazeltine Elec (mfr and contr) part 1620-1011G1; (same as A116).	Cover for A418
A424		Not used.	
A425	F	MOUNTING, MOTOR: stainless steel, passivated finish; cylindrical shape; 5-11/16 in. od by 13/16 in. h over-all; 4 mtg holes 0.169 in. dia equally spaced on 5 in. dia circle; Hazeltine Elec (mfr and contr) part 1590-1092G1.	For B401
B401		MOTOR, ALTERNATING CURRENT: capacitor start induction type; 115 v ac, 400 cycles, single phase; 0.65 amp; approx 65% power factor; 1/50 hp; single takeoff; 6500 rpm; reversible rotation; -54 deg C to +65 deg C ambient; 2-23/32 in. lg excluding shaft by 1-3/4 in. dia; double flatted shaft; 1/4 in. dia shaft by 11/16 in. lg, incl ball bearing; Eastern Air Devices, Inc (mfr) part J33D modified; Hazeltine Elec (contr) part 315-1034P2.	B401 motor
B401A		FAN, VANEAXIAL: 4 blades; 4 in. od; aluminum; ccw rotation as viewed facing the driving side; incl two no. 10-32 NF-2 set screws; Eastern Air Devices, Inc (mfr) part 2234-4C-2; Hazeltine Elec (contr) part 315-1034P3.	B401 fan
C401	B	CAPACITOR, FIXED, PAPER DIELECTRIC: 600 vdc working, 6 μf, +20% -10%, 5.4 μf to 7.2 μf capacity range; metal case; uninsulated; hermetically sealed; case 1-1/4 in. deep by 3-7/8 in. h by 3-3/4 in. w; 2 in. terminal centers; terminals 1-3/8 in. h; Spec MIL-C-25A; MIL type CP70E1EF605V; Hazeltine Elec (contr) part 235-1004P22.	Filter capacitor L401
C402	B	CAPACITOR, FIXED, PAPER DIELECTRIC: 600 vdc working, 1 μf, +20% -10%, 0.9 μf to 1.2 μf capacity range; metal case; uninsulated; hermetically sealed; case 1-3/4 in. deep by 1 in. h by 2 in. w; Spec MIL-C-25A; MIL type CP53B1EF105V; Hazeltine Elec (contr) part 235-1002P25.	Filament by-pass capacitor for T401
C403		CAPACITOR, FIXED, ELECTROLYTIC: 50 vdc working, 650 μf, -40 deg C to +85 deg C working temp range; metal case; uninsulated; hermetically sealed; case 1-3/8 in. dia by 3-3/4 in. lg; Spec JAN-C-62; JAN type CE41C651G; Hazeltine Elec (contr) part 235-1046P23.	Filter capacitor for L403
C404	B	CAPACITOR, FIXED, PAPER DIELECTRIC: 600 vdc working, 250,000 μμf, ±20%, 200,000 μμf to 300,000 μμf capacity range; metal case; insulated; hermetically sealed; case 1-1/16 in. dia by 2-5/16 in. lg; Spec MIL-C-25A; MIL type CP26A1EF254M; Hazeltine Elec (contr) part 235-1123P5.	Grid coupling capacitor, V409 and V410
C405	B	CAPACITOR, FIXED, PAPER DIELECTRIC: 600 vdc working, 10 μf, ±10%, 9.9 μf to 12 μf capacity range; metal case; uninsulated; hermetically sealed; case 1-3/4 in. deep by 4 in. h by 3-3/4 in. w; 2 in. terminal centers; terminals 1-3/8 in. h; Spec MIL-C-25A; MIL type CP70E1EF106K; Hazeltine Elec (contr) part 235-1004P30.	Filter capacitor L404

TABLE 8-3. MAINTENANCE PARTS LIST — Cont'd.

REF. DESIG.	NOTES	NAME AND DESCRIPTION	LOCATING FUNCTION
C406		Same as C404.	Grid coupling capacitor, V416, V417 and V418
C407		Same as C402.	Filter capacitor for K402
C408		Same as C402.	Motor starting capacitor for B401
C409	B	CAPACITOR, FIXED, PAPER DIELECTRIC: 600 vdc working, 2 μf, ±10%, 1.8 μf to 2.4 μf capacity range; metal case; uninsulated; hermetically sealed, case 2 in. deep by 1-1/8 in. h by 2 in. w; Spec MIL-C-25A; MIL type CP53B1EF205K; Hazeltine Elec (contr) part 235-1002P29; (same as C156).	Filter capacitor L402
C410		Same as C409.	Filter capacitor L402
CR401		RECTIFIER, METALLIC: selenium; designed for single phase full wave bridge; 60.4 v rms input; 48 v ±5% output, 6 amp max current; full wave rectification; 5-3/16 in. lg by 4-3/8 in. w by 4-13/16 in. h; Federal Telephone & Radio Corp (mfr) part 333D5956; Hazeltine Elec (contr) part 232-1015P1.	Contact power rectifier
CR402		RECTIFIER, METALLIC: selenium; designed for single phase half wave circuit; 180 v rms input; 72 v ±2% output; 350 ma max current; half wave rectification; 2.547 in. lg by 1-3/4 in. w by 2-1/16 in. h; Westinghouse Electric & Mfg Co (mfr) part 3A16HE1; Hazeltine Elec (contr) part 232-1020P1.	Relay power rectifier K402
E401		TERMINAL BOARD: phenolic board; incl 17 double screw type terminals; barrier type; 10-17/32 in. lg by 1-5/16 in. w by 5/8 in. h over-all excluding terminals; Hazeltine Elec (mfr and contr) part 247-1016G80.	General purpose
E402		Not used.	
E403		TERMINAL BOARD: phenolic board; incl 14 double screw type terminals; barrier type; 8-27/32 in. lg by 1-5/16 in. w by 5/8 in. h over-all excluding terminals; H.B. Jones (mfr) part 14-142-D; Hazeltine Elec (contr) part 247-1016G14.	General purpose
E404		TERMINAL BOARD: phenolic board; incl 16 double screw type terminals; barrier type; 7-3/4 in. lg by 1-1/8 in. w by 1/2 in. h over-all excluding terminals; Hazeltine Elec (mfr and contr) part 247-1015G79.	General purpose
E405		TERMINAL BOARD: phenolic board; incl 3 double screw type terminals; barrier type; 1-3/4 in. lg by 7/8 in. w by 13/32 in. h over-all excluding terminals; H.B. Jones (mfr) part 3-140-3/4 W-D; Hazeltine Elec (contr) part 247-1014G45; (same as E151).	General purpose
E406	C	POWER SUPPLY SUBASSEMBLY: c/o Hazeltine Elec parts, 2 studs 1591-1030P1, 2 bus bars 1591-1031P1, 1 cotter pin 293-1014P5, 1 pad assembly 1591-1032P1 and 1 panel 1591-1035P1; 4 in. lg by 3 in. w by 1-1/2 in. h; four 0.196 in. dia mtg holes on 3-1/2 in. by 1-5/8 in. mtg centers; Hazeltine Elec (mfr and contr) part 1591-5004G1; (incl E407 and E419).	Heater power link connection
E407	F	BUS BAR: brass, rectangular shape; solid; cross-sectional dim. 3/8 in. w by 0.078 in. thk; 1-3/8 in. lg over-all; Hazeltine Elec (mfr and contr) part 1591-1031P1; (p/o E406).	For heater power connections

TABLE 8-3. MAINTENANCE PARTS LIST — Cont'd.

REF. DESIG.	NOTES	NAME AND DESCRIPTION	LOCATING FUNCTION
E408		SHIELD, ELECTRON TUBE: accommodates RMA tube envelope style T 5-1/2; straight cylinder shape w/flared end; open top; 1 opening provided specifically for electrode leads; brass or copper; 1-3/4 in. lg by 0.930 in. w across mtg protrusions; mounts directly on tube; Spec JAN-S-28A; JAN type TS102U02; Hazeltine Elec (contr) part 308-1001P2; (same as E312).	Shield for V410 and V417
E409		SHIELD, ELECTRON TUBE: RMA tube envelope style T 5-1/2 (6-5), straight cylinder w/flared end; open top; 1 hole provided specifically for electrode leads; copper or brass, nickel pl; 2-1/4 in. lg by 0.930 in. w inside mtg bosses, 0.810 in. min id; mounts on chassis, incl 1 non-magnetic spring inside top; Spec JAN-S-28A; JAN type TS102U03; Hazeltine Elec (contr) part 308-1001P3; (same as E313).	For V411, V412 and V413
E410	A	INSULATOR, PLATE: rectangular; plastic; 10-17/32 in. lg by 1-5/8 in. in. w by 1/32 in. thk over-all; 4 mtg holes 13/64 in. dia on 10-1/8 in. by 1/2 in. mtg centers; incl 17 clearance holes 9/32 in. dia spaced 9/16 in. c to c; Hazeltine Elec (mfr and contr) part 221-1008P58.	For E401
E411		TERMINAL, STUD: 27/32 in. lg by 1/4 in. w across hex flats over-all; 1/4 in. w hex base, uninsulated; brass, silver-plated; Hazeltine Elec (mfr and contr) part 227-1050P4; (same as E129).	Component connections
E412	C	TERMINAL, STUD: 1-3/64 in. lg by 5/16 in. w across hex flats over-all; hex base insulated from conductor connection, 4000 v rms breakdown voltage; Cambridge Thermionic Corp (mfr) part X1995-D modified; Hazeltine Elec (contr) part 227-1027P4; (same as E319).	Component connections
E413	A	PANEL, INSULATING: rectangular; nylon base phenolic; 8-27/32 in. lg by 1-5/16 in. w by 1/32 in. thk; four 13/64 in. dia mtg holes on 8-7/16 in. by 1/2 in. mtg centers; Hazeltine Elec (mfr and contr) part 221-1007P55.	For E403
E414		Not used.	
E415	A	INSULATOR, PLATE: rectangular; laminated paper base plastic; 1-1/2 in. lg by 1 in. w by 1/32 in. thk; 1 center mtg hole 7/16 in. dia located 1/2 in. from 1 end; min fungus nutrient properties; Hazeltine Elec (mfr and contr) part 221-1002P2; (same as E108).	Insulated mounting for E416, R430 and R433
E416	A	INSULATOR, PLATE: rectangular; nylon base phenolic; 1-13/16 in. lg by 7/8 in. w by 1/32 in. thk; four 5/32 in. dia mtg holes on 1-1/2 in. by 5/16 in. mtg centers; Hazeltine Elec (mfr and contr) part 221-1007P3; (same as E114).	Insulated mounting for E405
E417		FUSEHOLDER: extractor post type; 250 v, 22 amp; for one cartridge type fuse w/ferrule terminals, 1-1/2 in. lg by 13/32 in. dia; 2-3/8 in. lg by 1-3/4 in. w by 1-1/8 in. h over-all; 2 terminals, solder lug type; Bussmann Mfg Co (mfr) part HPC-J; Hazeltine Elec (contr) part 343-1034P1.	For F401 thru F416 and spare fuse
E418		Not used.	

TABLE 8-3. MAINTENANCE PARTS LIST — Cont'd.

REF. DESIG.	NOTES	NAME AND DESCRIPTION	LOCATING FUNCTION
E419	F	TERMINAL, STUD: 1-1/2 in. lg by 3/8 in. w by 3/8 in. h over-all; 3/8 in. sq by 1/2 in. lg body; uninsulated; no. 10-24 NC-2 by 3/8 in. deep female thd in body, other end w/1/4 in.-20 NC-2 by 7/8 in. lg male thd; Hazeltine Elec (mfr and contr) part 1591-1030P1; (p/o E406).	For heater power termination
E420		TERMINAL, LUG: single, 0.125 in. dia hole for wire accommodation; 1-25/64 in. lg by 13/32 in. w by 0.040 in. thk over-all; brass, tin dipped finish; 2 mtg holes 1/2 in. c to c; Hazeltine Elec (mfr and contr) part 227-1010P6.	For E403
F401		FUSE, CARTRIDGE: 1.6 amp, 250 v max; time delay, opens 200% load in 25 sec, 500% load in 3 sec; fibre body; brass ferrule terminals; one time; non-indicating; 1-1/2 in. lg by 13/32 in. dia over-all; Bussmann Mfg Co (mfr) type FMM-1-6/10; Hazeltine Elec (contr) part 226-1004P6.	Service outlet-operating
F402		Same as F401.	System power control relay
F403		FUSE, CARTRIDGE: 4 amp, 250 v max; time delay, opens 200% load in 25 sec, 500% load in 3 sec; fibre body; brass ferrule terminals; one time; non-indicating; 1-1/2 in. lg by 13/32 in. dia over-all; Bussmann Mfg Co (mfr) type FNM-4; Hazeltine Elec (contr) part 226-1004P9.	Protective fuse for B501, T501, T503 and T504
F404		FUSE, CARTRIDGE: 6.25 amp, 250 v max; time delay, opens at 200% load in 25 sec, 300% load in 8 sec; ferrule terminals, 13/32 in. dia; fibre body; one time; non-indicating; 1-1/2 in. lg by 13/32 in. dia over-all; Bussmann Mfg Co (mfr) type FNM-6-1/4; Hazeltine Elec (contr) part 226-1004P15.	Protective fuse for B601, B752 and T605
F405		Same as F401.	Protective fuse for B2350 and T2350
F406		Same as F404.	Protective fuse for B701, B702, B755, CR701, T701 and T702
F407		FUSE, CARTRIDGE: 0.4 amp, 250 v max; time delay, opens 200% load in 25 sec, 500% load in 3 sec; fibre body; brass ferrule terminals; one time; non-indicating; 1-1/2 in. lg by 13/32 in. dia over-all; Bussmann Mfg Co (mfr) type FNM-4/10; Hazeltine Elec (contr) part 226-1004P3.	Protective fuse for T604
F408		FUSE, CARTRIDGE: 15 amp, 250 v max; instantaneous; opens in one hour at 135% load, rated continuous at 110% load; fibre body; brass ferrule; one time; non-indicating; 1-1/2 in. lg by 13/32 in. dia over-all; Bussmann Mfg Co (mfr) type BAN-15; Hazeltine Elec (contr) part 226-1003P6.	Protective fuse for T704
F409		Same as F404.	Protective fuse for B401, T401, T402 and T406
F410		Same as F404.	Protective fuse for B151, T101, T152 and T153

TABLE 8-3. MAINTENANCE PARTS LIST — Cont'd.

REF. DESIG.	NOTES	NAME AND DESCRIPTION	LOCATING FUNCTION
F411		FUSE, CARTRIDGE: 30 amp, 250 v max; instantaneous; opens in one hour at 135% load, 8 min at 200% load, rated continuous at 110% load; fibre body; brass ferrule terminals; one time; non-indicating; 1-1/2 in. lg by 13/32 in. dia over-all; Bussmann Mfg Co (mfr) type BAN-30; Hazeltine Elec (contr) part 226-1003P9.	Protective fuse for T151
F412		FUSE, CARTRIDGE: 60 amp, 250 v max; time delay, opens 200% load in 8 min, 600% load in 30 sec; fibre body; brass ferrule terminals; one time; non-indicating; 3-1/2 in. lg by 13/16 in. dia over-all; Bussmann Mfg Co (mfr) type FRN-60; Hazeltine Elec (contr) part 226-1015P3.	System power
F413		Same as F412.	System power
F414		FUSE, CARTRIDGE: 30 amp, 250 v max; instantaneous; fibre body; brass ferrule terminals; one time; non-indicating; 2 in. lg by 0.562 in. dia over-all; Bussmann Mfg Co (mfr) type NON-30; Hazeltine Elec (contr) part 226-1014P13.	Heater power HR401
F415		Same as F414.	Heater power HR401
F416		Same as F404.	Service outlet standby
F417		FUSE, CARTRIDGE: 3/4 amp, 250 v; time delay one hour at 135% load, 2 min at 200% load; ferrule terminals; 1-1/4 in. lg by 1/4 in. dia; Navy type no. 28032-3/4; Littelfuse (mfr) part 312.750; Hazeltine Elec (contr) part FU3-075.	Fuses regulated power supply
FL401		FILTER, RADIO INTERFERENCE: capacitor and iron core coil pi type; 1-13/16 in. lg by 1-1/4 in. w by 7/8 in. h excluding terminals and mtg; 2 amp, 500 v dc, 125 v ac, 400 cps; hermetically sealed; rectangular metal case; 2 integral mtg ears ea w/mtg hole 3/16 in. dia on 2-1/8 in. mtg/c; 2 solder lug terminals, grounded; impregnated for tropical use; attenuation at 0.15 mc 40 db, at 1.0 mc 70 db, at 50/150 mc, 50 db; Astron Corp (mfr) part AF-344; Hazeltine Elec (contr) part 363-1097P1.	Interference suppressor
H401		BOLT, EXTERNALLY RELIEVED BODY: stainless steel per Spec MIL-S-853A, Class 7, Type A, 22,000 psi min yield strength; double chamfer head 11/16 in. lg by 9/16 in. dia; externally relieved body 17/32 in. lg by 5/32 in. dia; 1/4 in.-20 NC-2 by 15/32 in. lg thd incl cone point; 3/32 in. w by 3/32 in. deep slot in head, head knurled; Hazeltine Elec (mfr and contr) part 1587-1095P1; (same as H128).	Main chassis mounting screw
H402		PULLER, FUSE: laminated fibre; plier type; rated by dia only, 9/16 in. to 1-1/2 in. dia; 7-1/2 in. lg over-all; Superior Fuse & Mfg Co (mfr) part PFP; Hazeltine Elec (contr) part 318-1006P1.	For F412, F413, F414 and F415
H403		SCREW, EXTERNALLY RELIEVED BODY: stainless steel per Spec MIL-S-853A(SHIPS), Class I, Type A; 22,000 psi min yield strength; passivated; double chamfer head; w/slot driver; head 3/8 in. lg by 5/16 in. dia; externally relieved body 0.115 to 0.125 in. dia by 19/32 in. lg; no. 8-32 NC-2 by 11/32 in. lg thd incl cone point; Hazeltine Elec (mfr and contr) part 1591-1018P1.	Secures A411
H404	C	HANDLE, BOW: for panel; stainless steel, passivated; 5-3/8 in. lg by 2-5/16 in. w by 3/8 in. deep over-all; 3/8 in. dia grip 4-5/8 in. lg; 2 mtg studs 5/16 in.-18 NC-2 on 5 in. mtg centers, 11/16 in. lg thd; Hazeltine Elec (mfr and contr) part 231-1038P1; (same as H129).	Unit handle

TABLE 8-3. MAINTENANCE PARTS LIST — Cont'd.

REF. DESIG.	NOTES	NAME AND DESCRIPTION	LOCATING FUNCTION
H405	C	HANDLE, BOW: for front panel; annealed stainless steel, passivated; 5-3/8 in. lg by 2-1/16 in. w by 3/8 in. deep over-all; 3/8 in. dia grip 4-5/8 in. lg; 2 mtg studs 5/16 in. -18 NC-2 thd by 7/16 in. lg; 1 stud ea end; Hazeltine Elec (mfr and contr) part 231-1038P2; (same as H131).	Unit handle
H406		WASHER, FINISHING: stainless steel; 9/32 in. hole dia by 3/4 in. od by 5/32 in. thk; Hazeltine Elec (mfr and contr) part 362-1018P1; (same as H134).	For captive screw H401
H407		GROMMET, RUBBER: synthetic rubber, MIL-G-3036; 1/4 in. dia hole, flange 5/8 in. od by 1/16 in. thk, groove 1/8 in. w by 7/16 in. dia; 1/4 in. h over-all; AN type AN931-A4-7; Hazeltine Elec (contr) part 359-1001P13.	Panel grommet
H408		RETAINER, ELECTRON TUBE: medium shell octal, RETMA tube base retained; corrosion resistant steel, passivated finish; dim., 29/32 in. radius from center line of retainer to center line of mtg hole, 1-5/8 in. max radius from center line of retainer to end of extended clip, 60 deg from center line of mtg hole to center line of tension loop, 120 deg from center line of mtg hole to center line of loop hinge, 7/8 in. h; w/holding spurs; Birtcher Corp (mfr) part 926C-13 w/tab; Hazeltine Elec (contr) part 308-1010P2.	Retains V414, V415, and V416
H409	C	WASHER, FINISHING: cold rolled steel; 3/4 in. od by 0.173 in. id by 3/16 in. thk over-all; extrusion 0.473 in. od tapered to 0.400 in. id by 5/32 in. h; Ward Leonard Electric Co (mfr) part 904; Hazeltine Elec (contr) part 236-1066P2.	For mounting R402, R404 and R451
H410	C	WASHER, FLAT: rd; stainless steel per Spec MIL-S-854, Class 2, Condition A; 75,000 psi min tensile strength; B94 Rockwell hardness; 7/8 in. max od by 0.312 in. id by 0.187 in. thk; Hazeltine Elec (mfr and contr) part 1591-1080P1.	For chassis roller
H411	C	WASHER, SHOULDERED: brass; 0.022 in. thk; 0.437 in. od by 0.173 in. id over-all; shoulder 0.258 in. od by 0.156 in. h; Ward Leonard Electric Co (mfr) type 902; Hazeltine Elec (contr) part 236-1081P1; (same as H106).	For mounting R403
H412		STRAP NUT, ELECTRON TUBE SOCKET: 1/16 in. thk brass, cadmium plated; 1-3/16 in. lg by approx 9/16 in. w by 3/8 in. h over-all; two no. 4-40 NC-2 tapped mtg holes spaced 0.875 in. c to c; Cinch Mfg Co (mfr) part 403; Hazeltine Elec (contr) part NTS-1000M-2.	Retains XV410, XV411, XV412, XV413 and XV417
H413	C	STUD, CONTINUOUS THREAD: non-magnetic corrosion-resisting steel; no. 8-32 NC-2 thd; 5 in. lg over-all; Hazeltine Elec (mfr and contr) part 234-1008P5.	For R403
H414		GROMMET, RUBBER: synthetic rubber, MIL-G-3036; 3/8 in. dia hole, flange 7/8 in. od by 1/8 in. thk, groove 1/8 in. w by 5/8 in. dia, 3/8 in. h over-all; AN type AN931-A6-10; Hazeltine Elec (contr) part 359-1001P15; (same as H119).	Protection for insulated wires
H415		SHAFT LOCK, ELECTRONIC COMPONENT: for variable resistor; c/o bright nickel plated brass bushing and lock nut; 1/2 in. lg by 1/2 in. w across hex flats over-all; 3/8 in. -32 NEF-2 mtg thd on bushing; incl compression nut 7/32 in. thk by 7/16 in. across hex flats; for 1/4 in. dia shaft; James Millen Mfg Co (mfr) part 10061; Hazeltine Elec (contr) part 231-1002G1; (same as H123).	For R416, R430, R433 and R443
H416	C	WASHER, FLAT: rd; aluminum per Navy Spec 47A11c, condition half hard; 34,000 psi min tensile strength; 11/16 in. od by 0.386 in. id by 0.050 in. thk; Hazeltine Elec (mfr and contr) part 236-1097P1.	For mounting HR401

TABLE 8-3. MAINTENANCE PARTS LIST — Cont'd.

REF. DESIG.	NOTES	NAME AND DESCRIPTION	LOCATING FUNCTION
H417	F	NUT, PLAIN, KNURLED: steel, AISI type no. 303; 1/4 in.-20 NC-2 thd; 21/32 in. lg by 0.502 in. max dia over-all; Hazeltine Elec (mfr and contr) part 1587-1053P1; (same as H130).	Chassis centering pin
H418	C	PIN, CLEVIS: c/o 1 ea, Clevis Pin Hazeltine part no. 1620-1007P1, Ring no. 1620-1008P1, Chain no. 382-1005P1, 4-1/4 in. lg; stainless steel, passivated; 9/32 in. dia by 1-15/16 in. lg excluding ring and chain; Hazeltine Elec (mfr and contr) part 1620-5001G1; (same as H126).	For cover A423
H419		BOLT, EXTERNALLY RELIEVED BODY: stainless steel per Spec MIL-S-853A, Class 7, Type A; 22,000 psi min yield strength; head 3/16 in. lg by 1/2 in. dia; externally relieved body w/0.250 in. dia by 0.025 to 0.030 in. lg shoulder under head followed by shank 0.185 in. dia by 0.845 to 0.850 in. lg; 1/4 in.-20 NC-2 by 1/2 in. lg thd; incl 1/16 in. w by 3/32 in. deep slot in head; Hazeltine Elec (mfr and contr) part 209-1008P1; (same as H103).	Mounting screw for A418
H420	F	PIN, SHOULDER, HEADLESS: stainless steel, AISI type 303; passivated finish; 3 in. lg by 0.623 to 0.625 in. dia over-all; one shank 0.623 to 0.625 in. dia by 1-3/8 in. lg w/0.3125 to 0.3135 in. dia radial hole located 3/4 in. from end of pin, other shank 0.593 in. dia by 1-5/8 in. lg w/15 deg by 5/16 in. lg tapered end and one 5/16 in. dia radial hole spaced 1.498 to 1.502 in. c to c from other hole; Hazeltine Elec (mfr and contr) part 1620-1003P1; (same as H146).	Connecting pin for A418
H421	F	PIN, SHOULDER, HEADLESS: stainless steel, AISI type 302; passivated finish; 2-1/16 in. lg by 0.370 to 0.375 in. dia over-all; shank 0.246 to 0.249 in. dia by 1-3/32 in. lg w/axial hole 0.185 in. dia by 3/16 in. deep in end; Hazeltine Elec (mfr and contr) part 1620-1004P1; (same as H148).	For A423
H422		Not used.	
H423	C	BOLT, MACHINE: non-magnetic corrosion-resisting steel; passivated finish; semi-finished; hex head, 1/4 in. w across flats by 0.242 in. h; 5/16 in.-18 NC-2 by 1-3/8 in. lg thd; Hazeltine Elec (mfr and contr) part 207-1023P174; (same as H306).	Secures H424
H424	C	HANDLE, BAIL: stainless steel, passivated and USMC green paint finish; 6 in. lg by 3-1/2 in. w by 3/8 in. thk over-all; Hazeltine Elec (mfr and contr) part 1620-1009P1; (same as H144).	Handle for unit inner case
H425		LATCH, FASTENER: brass, cadmium plated; approx 8-7/8 in. lg by 1-1/2 in. w by 2-3/8 in. h over-all w/arm in right angle position; Hazeltine Elec (mfr and contr) part/dwg A-19227; (same as H145).	For chassis catch
H426		BOLT, MACHINE: stainless steel per Spec MIL-S-853A(SHIPS), Class 7, Type A; 22,000 psi min yield strength; passivated; semi-finished; hex head, 19/32 in. w across flats by 19/64 in. h; 3/8 in.-16 NC-2 by 1-1/8 in. lg thd; Hazeltine Elec (mfr and contr) part 207-1030P2; (same as H307).	Mounting screw for H415
H427		CLAMP, LOOP: nylon; 23/32 in. lg by 3/8 in. h over-all; designed to hold material 0.190 in. max dia; Burndy Engineering Co (mfr) type HP-3N; Hazeltine Elec (contr) part CP-1295-3.	Cable clamp
H428		CLAMP, LOOP: nylon; 1-7/8 in. lg by 1/2 in. h over-all; designed to hold material 0.84 in. max dia; two aligned mtg holes 0.200 in. dia; Burndy Engineering Co (mfr) type HP-14N; Hazeltine Elec (contr) part CP-1295-14.	Cable clamp

TABLE 8-3. MAINTENANCE PARTS LIST — Cont'd.

REF. DESIG.	NOTES	NAME AND DESCRIPTION	LOCATING FUNCTION
H429 and H430		Not used.	
H431	B	GROMMET, RUBBER: synthetic rubber, MIL-G-3036; 5/16 in. dia hole, flange 13/16 in. od by 1/8 in. thk, groove 1/16 in. w by 9/16 in. dia, 5/16 in. h over-all; AN type AN931-5-9; Hazeltine Elec (contr) part 359-1001P3.	Protection for insulated wire
H432		GROMMET, RUBBER: synthetic rubber, MIL-G-3036; 3/8 in. dia hole, flange 7/8 in. od by 1/8 in. thk, groove 1/16 in. w by 5/8 in. dia, 5/16 in. h over-all; AN type AN931-6-10; Hazeltine Elec (contr) part 359-1001P4; (same as H112).	Protection for insulated wire
H433	C	HANDLE, BOW: for chassis; 0.080 in. thk aluminum; 14-5/32 in. lg by 10-1/16 in. w by 3/4 in. h over-all; 4 mtg holes 0.257 in. dia on 13 in. by 1-1/2 in. mtg centers; Hazeltine Elec (mfr and contr) part 1591-1084P1.	Chassis handle
H434	C	WASHER, FLAT: rd; aluminum per Navy Spec 47A11c; condition half hard; 34,000 psi min tensile strength; 11/16 in. od by 0.213 in. id by 0.050 in. thk; Hazeltine Elec (mfr and contr) part 236-1097P2.	For mounting HR401
H435	C	STUD, CONTINUOUS THREAD: non-magnetic corrosion-resisting steel; no. 8-32 NC-2 thd; 4 in. lg over-all; Hazeltine Elec (mfr and contr) part 234-1008P4; (same as H162).	For R403
H436	F	PIN, GROOVED, HEADLESS: stainless steel; passivated; 1 in. lg by 5/16 in. dia; Driv-Lok Pin Co (mfr) type C; Hazeltine Elec (contr) part 1620-1022P1.	For O442
H437	C	NUT, PLAIN, HEXAGON: steel; cadmium plated; finished nut w/flat or chamfered bearing surface; 7/8 in.-16 NC-2 thd; 1-1/16 in. max w across hex flats by 1/4 in. max thk; Hazeltine Elec (mfr and contr) part 203-1006P1.	For C403
H438	C	WASHER, NON-METALLIC: rd; nylon; 0.312 in. od by 0.156 in. id by 0.031 in. h over-all; Hazeltine Elec (mfr and contr) part 236-1003P2.	Part of mounting for E417
H439		BOLT, SHOULDER: stainless steel per Spec MIL-S-853A(SHIPS), Class 7, Type A; 22,000 psi min yield strength; passivated finish; flat fillister head 0.722 in. h by 3/8 in. dia; slot drive; shoulder 1-5/16 in. lg by 3/8 in. dia; 1/4 in.-20 NC-2 thd by approx 11/16 in. lg; 2 in. lg below head; 0.028 in. w by 0.352 in. dia under cut separates head from shank; Hazeltine Elec (mfr and contr) part 1591-1078P1.	For mounting chassis
H440	C	NUT, PLAIN, HEXAGON: steel, AISI type 303; passivated finish; finished, chamfered bearing surface; 5/16 in.-18 NC-2 thd; 9/16 in. w across flats by 3/16 in. h over-all; Hazeltine Elec (mfr and contr) part 203-1037P1; (same as H149).	For H405
H441		CLAMP, LOOP: nylon; 3/4 in. lg by 3/8 in. h over-all; designed to hold material 0.250 in. max dia; Burndy Engineering Co (mfr) type HP-4N; Hazeltine Elec (contr) part CP-1295-4; (same as H107).	Cable clamp
H442		CLAMP, LOOP: nylon; 13/16 in. lg by 3/8 in. h over-all; designed to hold material 0.310 in. max dia; Burndy Engineering Co (mfr) type HP-5N; Hazeltine Elec (contr) part CP-1295-5.	Cable clamp

TABLE 8-3. MAINTENANCE PARTS LIST — Cont'd.

REF. DESIG.	NOTES	NAME AND DESCRIPTION	LOCATING FUNCTION
H443		CLAMP, LOOP: nylon; 7/8 in. lg by 3/8 in. h over-all; designed to hold material 0.380 in. max dia; Burndy Engineering Co (mfr) type HP-6N; Hazeltine Elec (contr) part CP-1295-6.	Cable clamp
H444		CLAMP, LOOP: nylon; 3/8 in. w over-all by 0.045 in. thk material by 35/64 in. from loop center to mtg hole by 7/16 in. loop id; mtg hole 0.173 in. dia; w/o fastening device; Burndy Engineering Co (mfr) type HP-7N; Hazeltine Elec (contr) part CP-1295-7; (same as H104).	Cable clamp
H445	C	WASHER, FLAT: rd; non-magnetic corrosion-resisting steel; 1/2 in. od by 0.266 in. id by 0.031 in. thk over-all; Hazeltine Elec (mfr and contr) part 236-1001P9.	For H439
H446	C	WASHER, FLAT: rd; stainless steel per Spec MIL-S-854(SHIPS), Class 4, Condition A; 70,000 psi min tensile strength; B88 Rockwell hardness; 0.312 in. dia hole, 7/8 in. od by 0.017 in. thk; Hazeltine Elec (mfr and contr) 236-1078P1; (same as H319).	Washer for spacing post used with E106
H447	C	WASHER, FLAT: rd; stainless steel per Spec MIL-S-854(SHIPS), Class 2, Condition A; 75,000 psi min tensile strength; B94 Rockwell hardness; 0.196 in. dia hole, 9/16 in. od by 0.031 in. thk; Hazeltine Elec (mfr and contr) part 236-1090P1.	For HR401
H448	F	PIN, STRAIGHT, HEADLESS: corrosion-resisting steel per Spec MIL-S-853A(SHIPS), Class 7, Type A; 22,000 psi min yield strength; 5/8 in. lg by 0.1252 in. dia over-all; both ends w/edges rounded on 1/32 in. radius; Hazeltine Elec (mfr and contr) part 293-1007P5.	For O459
H449	C	SCREW, MACHINE: non-magnetic corrosion resistant steel; AISI type 301; 160,000 psi min yield strength; 185,000 psi min tensile strength; 140-170 Brinell hardness; passivate finish; 0.153 in. h head by 0.500 in. w across flats; slot drive; 1/4 in.-20 NC-2 thd; 5/8 in. lg threaded portion; Hazeltine Elec (mfr and contr) part 207-1005P345.	Holds A401
H450	C	WASHER, FLAT: rd; non-magnetic corrosion-resisting steel; 5/8 in. od by 0.390 in. id by 0.062 in. thk over-all; Hazeltine Elec (mfr and contr) part 236-1001P13.	For R416, R430, R433 and H439
H451 and H452		Not used.	
H453	F	PIN, GROOVED, HEADED: stainless steel, AISI type 304; passivated finish; rd head, 21/64 in. dia; shank 3/16 in. dia by 2-1/4 in. lg under head w/0.028 in. w undercut to 0.147 in. dia located 2-1/16 in. from bearing surface; Hazeltine Elec (mfr and contr) part 1587-1082P3; (same as H132).	S402 bracket stop pin
H454		Not used.	
H455	F	NUT, PLAIN, PLATE: stainless steel, AISI type 302; passivated finish; 1/4 in.-20 NC-2 thd hole in center; 1-5/8 in. lg by 5/8 in. w by 7/32 in. thk over-all; 2 mtg holes 5/16 in. dia spaced 1.125 in. c to c; Hazeltine Elec (mfr and contr) part 1593-1004P1; (same as H151).	For A418
H456		WASHER, RECESSED: stainless steel per Spec MIL-S-853A(SHIPS), Class 7, Type A; 3/4 in. od by 0.376 to 0.381 in. id by 1/8 in. thk over-all, recess 5/8 in. dia by 90 deg by 0.062 in. deep; Hazeltine Elec (mfr and contr) part 1593-1007P1; (same as H315).	For A415

TABLE 8-3. MAINTENANCE PARTS LIST — Cont'd.

REF. DESIG.	NOTES	NAME AND DESCRIPTION	LOCATING FUNCTION
H457 thru H460		Not used.	
H461		SCREW, MACHINE: non-magnetic corrosion-resisting steel; flat countersunk head 0.477 to 0.507 in. dia by 82 deg countersink; slot drive; 1/4 in.-20 NC-2 by 0.597 in. lg thd; 3/4 in. lg over-all; Hazeltine Elec (mfr and contr) part 207-1008P332; (same as H324).	Secures vibrating mount
H462	C	BOLT, EYE: stainless steel per Spec MIL-S-853A, Class 7, Type A; 22,000 psi min yield strength; passivated finish; open eye; no. 6-32 NC-2 by 1 in. lg thd; 19-3/32 in. lg from thd end to furthest point inside eye, 7/16 in. id of eye, 1/16 in. eye opening; shank approx 18-29/64 in. lg; Hazeltine Elec (mfr and contr) part 1591-1049P1.	For S404
H463		Not used.	
HR401		HEATING ELEMENT, ELECTRICAL: rated 115 v, 150 w, 1.3 amp; monel sheath; 8 in. lg by 1-1/2 in. w by 3/8 in. h excluding terminals; Watlow Electric Mfg Co (mfr) part 1209D; Hazeltine Elec (contr) part 280-1090P1; (same as HR151).	Unit heater
I401		LAMP, GLOW: neon gas; rated 0.04 w, 65 v ac, 90 v dc striking voltage; 1-3/16 in. max over-all h; 200,000 ohms external resistor required for 105 to 125 v operation; General Electric Co (mfr) part NE-51; Hazeltine Elec (contr) part 277-1004P1.	Blown fuse indicator F401
I402		Same as I401.	Blown fuse indicator F402
I403		Same as I401.	Blown fuse indicator F403
I404		Same as I401.	Blown fuse indicator F404
I405		Same as I401.	Blown fuse indicator F405
I406		Same as I401.	Blown fuse indicator F406
I407		Same as I401.	Blown fuse indicator F407
I408		Same as I401.	Blown fuse indicator F408
I409		Same as I401.	Blown fuse indicator F409
I410		Same as I401.	Blown fuse indicator F410
I411		Same as I401.	Blown fuse indicator F411
I412		Same as I401.	Blown fuse indicator F412

TABLE 8-3. MAINTENANCE PARTS LIST — Cont'd.

REF. DESIG.	NOTES	NAME AND DESCRIPTION	LOCATING FUNCTION
I413		Same as I401.	Blown fuse indicator F413
I414		Same as I401.	Blown fuse indicator F414
I415		Same as I401.	Blown fuse indicator F415
I416		Same as I401.	Blown fuse indicator F416
I417		LAMP, GLOW: neon gas; rated 1/4 w; 1-9/16 in. max over-all h; 30,000 ohms external resistor required for 105 to 125 v operation; Spec JAN-1S; JAN type 991; Hazeltine Elec (contr) part 277-1005P1; (same as I151).	Interlock warning S402 and S404
I418		LENS, INDICATOR LIGHT: clear; 5/8 in. dia; plastic; smooth face; smooth back; transparent; 25/32 in. lg by 5/8 in. dia over-all; Dialco (mfr) part 91-937; Hazeltine Elec (contr) part 281-1002P2.	Lens for I401 thru I416 and spare lamp
J401		CONNECTOR, RECEPTACLE, ELECTRICAL: 22 contacts; 1 connector mating end; 4 male contacts, pin type; 41 amp, 700 v dc, 500 v ac working voltage; 18 male contacts, pin type; 22 amp, 700 v dc, 500 v ac working voltage; straight shape; 1-13/32 in. lg by 2 in. w by 2 in. h excluding terminals; w/inclosing aluminum base alloy shell, resistant to corrosion; polarized; locking type; 1-3/4 in.-18 thd on shell for mating w/coupling nut; four 0.147 in. dia mtg holes on 1-9/16 in. by 1-9/16 in. mtg centers; Spec MIL-C-5015B; type AN3102C-28-11P; Hazeltine Elec (contr) part 276-1131P3.	To signal comparator J301
J402		CONNECTOR, RECEPTACLE, ELECTRICAL: 12 contacts; 1 connector mating end; 6 male contacts, pin type; 41 amp, 1250 v dc, 900 v ac working voltage; 6 male contacts, pin type; 22 amp, 1250 v dc, 900 v ac working voltage; dielectric material per Spec MIL-C-5015B; straight shape; 1-13/32 in. lg by 2 in. w by 2 in. h excluding terminals; w/inclosing aluminum base alloy shell, resistant to corrosion; polarized; locking type; 1-3/4 in.-18 thd on shell for mating w/coupling nut; four 0.147 in. dia mtg holes on 1-9/16 in. by 1-9/16 in. mtg centers; Spec MIL-C-5015B; type AN3102C-28-9P; Hazeltine Elec (contr) part 276-1131P5.	Mates P402
J403		CONNECTOR, RECEPTACLE, ELECTRICAL: 30 contacts; 1 connector mating end; 6 male contacts, pin type; 41 amp, 700 v dc, 500 v ac working voltage; 24 male contacts, pin type, 22 amp, 700 v dc, 500 v ac working voltage; dielectric material per Spec MIL-C-5015B; straight shape; 1-1/2 in. lg by 2-1/4 in. w by 2-1/4 in. h excluding terminals; w/inclosing aluminum base alloy shell, resistant to corrosion; polarized; locking type; 2 in.-18 thd on shell for mating w/coupling nut; four 0.173 in. dia mtg holes on 1-3/4 in. by 1-3/4 in. mtg centers; Spec MIL-C-5015B; type AN3102C-32-8P; Hazeltine Elec (contr) part 276-1141P3.	Mates P403

TABLE 8-3. MAINTENANCE PARTS LIST — Cont'd.

REF. DESIG.	NOTES	NAME AND DESCRIPTION	LOCATING FUNCTION
J404		CONNECTOR, RECEPTACLE, ELECTRICAL: 2 contacts; 1 connector mating end; male contacts, pin type; 135 amp, 700 v dc, 500 v ac working voltage; straight shape; 1-13/32 in. lg by 1-3/4 in. w by 1-3/4 in. h excluding terminals; w/inclosing aluminum base alloy shell; resistant to corrosion; polarized; locking type; 1-1/2 in.-18 thd on shell for mating w/coupling nut; four 0.147 in. dia mtg holes on 1-3/8 in. by 1-3/8 in. mtg centers; Spec MIL-C-5015B; type AN3102A-24-9P; Hazeltine Elec (contr) part 276-1169P1.	Heater power input
J405		Same as J404.	System power input
J406		CONNECTOR, RECEPTACLE, ELECTRICAL: 23 contacts; 1 connector mating end; 5 male contacts, pin type; 41 amp, 1250 v dc, 900 v ac working voltage; 18 male contacts, pin type; 22 amp, 1250 v dc, 900 v ac working voltage; dielectric material per Spec MIL-C-5015B; straight shape; 1-1/2 in. lg by 2-1/4 in. w by 2-1/4 in. h excluding terminals; w/inclosing aluminum base alloy shell, resistant to corrosion; polarized; locking type; 2 in.-18 thd on shell for mating w/ coupling nut; four 0.173 in. dia mtg holes on 1-3/4 in. by 1-3/4 in. mtg centers; Spec MIL-C-5015B; type AN3102C-32-13P; Hazeltine Elec (contr) part 276-1141-P1; (same as J151).	To modulator
J407		CONNECTOR, RECEPTACLE, ELECTRICAL: 52 contacts; 1 connector mating end; 2 male contacts, pin type; 40 amp rating, 8 male contacts, pin type; 30 amp rating, 42 male contacts, pin type; 10 amp rating; arc resistant plastic insert; straight shape; 1-1/32 in. lg by 3-1/8 in. w by 3-1/8 in. h excluding terminals; w/ inclosing aluminum base alloy shell, resistant to corrosion; polarized; locking type; 2-13/16 in.-18 thd on shell for mating w/coupling nut; four 0.169 in. dia mtg holes on 2.386 in. by 2.386 in. mtg centers; Cannon Electric Development Co (mfr) type AK-G52-32SL; Hazeltine Elec (contr) part 276-1128P1.	Mates P407
J408		CONNECTOR, RECEPTACLE, ELECTRICAL: 26 male pin type contacts; 1 connector mating end; 22 amp, 700 v dc, 500 v ac working voltage; straight shape; 1-13/32 in. lg by 2 in. w by 2 in. h excluding terminals; w/inclosing aluminum base alloy shell, resistant to corrosion; polarized; locking type; 1-3/4 in.-18 thd on shell for mating w/ coupling nut; four 0.147 in. dia mtg holes on 1-9/16 in. by 1-9/16 in. mtg centers; Spec MIL-C-5015B; type AN3102C-28-12P; Hazeltine Elec (contr) part 276-1131P4.	To receiver transmitter
J409	B	CONNECTOR, RECEPTACLE, ELECTRICAL: 2 contacts; 1 connector mating end; female contacts, flat type; parallel arrangement, rated 10 amp, 250 v, low loss plastic insert; 15 amp, 125 v; straight shape; approx 9/16 in. lg by 1-5/8 in. w by 1-5/8 in. h excluding terminals; w/partially inclosing aluminum shell, resistant to corrosion; locking type; 1-3/8 in.-18 thd on shell for mating w/coupling nut; four 0.120 in. dia mtg holes on 1-1/4 in. by 1-1/4 in. mtg centers; American Phenolic Corp (mfr) part 97-4085; Hazeltine Elec (contr) part 276-1101P1.	Service outlet
J410		JACK, TELEPHONE: spring leaf contact, tip and sleeve contact arrangement J1; 1-21/64 in. max lg by 15/16 in. max w by 25/32 in. max h over-all; accommodates 2 conductor plugs w/0.25 in. dia by 1-7/32 in. lg shank; Spec MIL-J-641A; type JJ-034; Hazeltine Elec (contr) part 276-1114P1.	Phone jack

TABLE 8-3. MAINTENANCE PARTS LIST — Cont'd.

REF. DESIG.	NOTES	NAME AND DESCRIPTION	LOCATING FUNCTION
J411		CONNECTOR, RECEPTACLE, ELECTRICAL: 3 contacts; 1 connector mating end; male contacts, pin type; 22 amp, 1250 v dc, 900 v ac working voltage; straight shape; 1-11/32 in. lg by 1-1/2 in. w by 1-1/2 in. h excluding terminals; w/inclosing aluminum base alloy shell, resistant to corrosion; polarized; locking type; 1-1/4 in. -18 thd on shell for mating w/coupling nut; four 0.120 in. dia mtg holes on 1-5/32 in. by 1-5/32 in. mtg centers; Spec MIL-C-5015B; type AN3102C-20-6P; Hazeltine Elec (contr) part 276-1142P4.	To IFF
J412		CONNECTOR, RECEPTACLE, ELECTRICAL: 9 contacts; 1 connector mating end; 3 female contacts, pin type; 73 amp, 1250 v dc, 900 v ac working voltage; 6 female contacts, pin type; 41 amp, 700 v dc, 500 v ac working voltage; straight shape; 1-13/32 in. lg by 2 in. w by 2 in. h excluding terminals; w/inclosing aluminum base alloy shell, resistant to corrosion; polarized; locking type; 1-3/4 in. -18 thd on shell for mating w/coupling nut; four 0.147 in. dia mtg holes on 1-9/16 in. by 1-9/16 in. mtg centers; Spec MIL-C-5015B; type AN3102C-28-1S; Hazeltine Elec (contr) part 276-1131P6.	To remote PPI
J413		CONNECTOR, RECEPTACLE, ELECTRICAL: 1 female contact; coaxial, plain type; 1 connector mating end; 50 ohms characteristic impedance; low loss plastic insert; straight shape; 0.731 in. lg by 1 in. w by 1 in. h excluding terminal, w/partially inclosing copper base alloy shell, resistant to corrosion, precious metal plated; locking type; 5/8 in. -24 thd on shell for mating w/coupling nut; four 1/8 in. dia mtg holes on 0.718 in. by 0.718 in. mtg centers; Spec MIL-C-71A; type UG-58A/U; Hazeltine Elec (contr) part 276-1030P2; (same as J152).	To signal comparator J305
J414		Same as J413.	Trigger to remote PPI
J415		Same as J413.	To signal comparator J303
J416		Same as J413.	Trigger from R/T J506
J417		Same as J413.	To IFF
J418		Same as J413.	Trigger to IFF
J419		Same as J413.	To remote PPI
J420		CONNECTOR, RECEPTACLE, ELECTRICAL: 7 female contacts, pin type; 1 connector mating end; 22 amp, 700 v dc, 500 v ac working voltage; straight shape; 1-1/8 in. lg by 1-9/32 in. w by 1-9/32 in. h excluding terminals; w/inclosing aluminum base alloy shell, resistant to corrosion; polarized; locking type; 1 in. -20 thd on shell for mating w/coupling nut; four 0.120 in. dia mtg holes on 0.968 in. by 0.968 in. mtg centers; Spec MIL-C-5015B; type AN3102C-16S-1S; Hazeltine Elec (contr) part 276-1171P1.	Magnetron aging jack
J421		Not used.	

TABLE 8-3. MAINTENANCE PARTS LIST — Cont'd.

REF. DESIG.	NOTES	NAME AND DESCRIPTION	LOCATING FUNCTION
J422		CONNECTOR, RECEPTACLE, ELECTRICAL: 3 male pin type contacts; rated 22 amps, 700 v dc, 500 v ac working voltage; straight shaped; 1-1/8 in. lg by 1-3/16 in. w by 1-3/16 in. h excluding terminal; inclosing aluminum base alloy shell, resistant to corrosion; polarized; locking type; 7/8 in. -20 thd on shell for mating w/coupling nut; four 0.120 in. dia mtg holes on 29/32 in. by 29/32 in. mtg centers; Spec MIL-C-5015B; type AN3102C-14S-1P; Hazeltine Elec (contr) part AN3102C-14S-1P; (same as J310).	Mates P422
K401		RELAY, MOTOR DRIVEN: c/o three spdt switches; contacts rated 10 amp at 125 v ac; motor rated 6 v dc; 5 min time interval; 4-7/32 in. lg by 3 in. w by 2-5/16 in. h excluding terminals; Haydon Mfg Co Inc (mfr) part 5839; Hazeltine Elec (contr) part 1591-1001P1.	Time delay relay
K402		RELAY, SOLENOID: non-pile-up type contacts, dpst normally open, double break; contacts rated 55 amp at 29 v dc, or 115 v 400 cps ac; 1 winding; 27.5 v dc operating voltage; 110 ohms resistance; 2-11/16 in. lg by 3 in. w by 2-1/32 in. h over-all; Leach Relay Co (mfr) part 7064-12D; Hazeltine Elec (contr) part 271-1051P1; (same as K152).	Main power control
K403		RELAY, ARMATURE: non-pile-up type contacts, dpdt, double break; contacts rated 5 amp at 24 v dc, or 110 v ac; 1 non-inductive winding; 27.5 v dc, approx 0.107 amp; 255 ohms resistance; 2-3/8 in. lg by 1-25/32 in. w by 1 in. h over-all; Allied Control Co Inc (mfr) type BJ; Hazeltine Elec (contr) part 271-1050P2.	Lock in for time delay
K404		Not used.	
K405		RELAY, ARMATURE: non-pile-up type, 4 pole double throw; contacts rated 15 amp, 115 v ac; 1 non-inductive winding; 27.5 v dc, approx 0.11 amp; 230 ohms resistance; 2-1/4 in. lg by 2-1/16 in. w by 1-7/8 in. h over-all; Navy Spec 17R6; American Relay & Controls Inc (mfr) type DO; Hazeltine Elec (contr) part 271-1099P1.	Pilot relay
L401		REACTOR: fixed inductance type; 1 coil, 0.3 henry, 355 ma dc; 10 ohms ±15% dc resistance; 1.275 kv rms test; 2-1/16 in. dia by approx 2-5/8 in. h excluding terminals and mtg studs; 3 mtg studs equally spaced on 25/32 in. radius; Spec MIL-T-27; Hazeltine Elec (mfr and contr) part 292-1238G1.	Filter reactor
L402		REACTOR: fixed inductance type; 1 coil, 2 henrys, 62 ma dc; 170 ohms +25% -5% dc resistance; 1.275 kv rms test; 1-3/4 in. dia by 2-3/32 in. h excluding terminals and mtg studs; 3 mtg studs equally spaced on 27/32 in. radius; Spec MIL-T-27; Hazeltine Elec (mfr and contr) part 292-1239G1.	Filter reactor
L403		REACTOR: fixed inductance type; 1 coil, 0.003 henry, 5.5 amp dc; 0.095 ohms ±15% dc resistance; 1.275 kv rms test; 2-7/8 in. lg by 2-5/8 in. w by 3-5/8 in. h excluding terminals and mtg studs; 4 mtg studs on 2-1/16 in. by 1-3/4 in. mtg centers; Spec MIL-T-27; Hazeltine Elec (mfr and contr) part 292-1250G1.	Filter reactor
L404		REACTOR: fixed inductance type; 1 coil, 0.2 henry, 670 ma dc; 4.5 ohms ±15% dc resistance; 1.780 kv rms test; 2-7/8 in. max lg by 2-5/8 in. max w by 3 in. max h excluding terminals and mtg studs; 4 mtg studs on 2-1/16 in. by 1-3/4 in. mtg centers; Spec MIL-T-27; Hazeltine Elec (mfr and contr) part 292-1237G1.	Filter reactor

TABLE 8-3. MAINTENANCE PARTS LIST — Cont'd.

REF. DESIG.	NOTES	NAME AND DESCRIPTION	LOCATING FUNCTION
M401		VOLTMETER: panel type; ac, 360 to 440 cps; range 0 to 150 v, 30 scale div; plastic case; 1.60 in. deep behind flange by 2.695 in. max flange dia by 2.21 in. body dia; two 1/4 in.-20 thd terminal; accuracy ±2% of full scale; calibrated for non-magnetic panel; black markings on white background; 3 mtg holes; Spec JAN-I-6; type MR25W150AFVV; Hazeltine Elec (contr) part 245-1023P1.	AC line voltmeter
M402		METER, TIME TOTALIZING: calibrated in hr, 10,000 hr max reading, 1 hr smallest increment; white numerals on black background; reset type; synchronous type motor, 15 to 30 v dc; indicator hand revolves one revolution per minute; flush panel style mtg; 3 mtg holes; 2-7/8 in. dia by 2-33/64 in. lg over-all; John W. Hobbs Corp (mfr) model MI-255 modified; Hazeltine Elec (contr) part 245-1027P3.	Elapsed time meter
M403		METER, ELECTRICAL FREQUENCY: ac, 380 to 420 cps range; 5 vibrating reeds; 5 scale div; 100 to 130 v; plastic case; 1-3/8 in. deep behind flange by 2-11/16 in. dia mtg flange by 2-5/32 in. dia body; 2 screw stud terminals no. 8-32 NF-2 thd; 0.5% accuracy; 85 ohms per v; calibrated for non-magnetic panel; black markings on white background; self-contained; three 0.125 in. dia mtg holes; H.H. Sticht Co (mfr) model PF-5; Hazeltine Elec (contr) part 245-1024P1.	Frequency meter
MP401		RETAINER, ELECTRON TUBE: medium shell octal, RETMA tube base retainer; nickel silver finish; clamp dia 1.625 in.; 5/8 in. h; Augat Bros Inc (mfr) part 120U1-212Z; Hazeltine Elec (contr) part CP-1412-3.	Retains V407, V408 and V409
MP402		CLAMP, LOOP: nylon; 5/8 in. lg by 3/8 in. h over-all; designed to hold material 0.130 in. max dia; Burndy Engineering Co (mfr) type HP-2N; Hazeltine Elec (contr) part CP-1295-2.	Cable clamp
MP403		CLAMP, LOOP: nylon; 3/4 in. lg by 3/8 in. h over-all; designed to hold material 0.250 in. max dia; Burndy Engineering Co (mfr) type HP-4N, Hazeltine Elec (contr) part CP-1295-4.	Cable clamp
MP404		CLAMP, LOOP: nylon; 13/16 in. lg by 3/8 in. h over-all; designed to hold material 0.310 in. max dia; Burndy Engineering Co (mfr) type HP-5N; Hazeltine Elec (mfr and contr) part CP-1295-5.	Cable clamp
MP405 thru MP415		Not used.	
MP416	F	SHAFT, ROLLER: stainless steel AISI 303; passivated; 1-23/64 in. lg by 1/2 in. w by 1/2 in. h over-all; incl 0.196 in. dia hole centered and drilled through side of head; Hazeltine Elec (mfr and contr) part 1587-1093P2; (same as MP115).	For chassis roller
MP417	B	ADHESIVE: for rubber channel; neoprene, high initial strength; B.B. Chemical Co (mfr) part 1021; Hazeltine Elec (contr) part 230-1020P1.	For O448
MP418	C	PRIMER, ADHESIVE: for rubber adhesive; B.B. Chemical Co (mfr) part 1007; Hazeltine Elec (contr) part 230-1019P1.	Primer for MP417
MP419 thru MP442		Not used.	

TABLE 8-3. MAINTENANCE PARTS LIST — Cont'd.

REF. DESIG.	NOTES	NAME AND DESCRIPTION	LOCATING FUNCTION
MP443	F	SHAFT, ROLLER: for chassis roller; stainless steel per Spec AISI type 303; passivated finish; cylindrical shank 1-5/32 in. lg by 0.305 in. dia w/1/2 in. sq head; 1-21/32 in. lg by 1/2 in. w by 1/2 in. h over-all; incl 0.196 in. dia hole centered and drilled through side of head; end of shank chamfered 1/64 in.; Hazeltine Elec (mfr and contr) part 1587-1093P1; (same as MP114).	For chassis roller
O401		PACKING, PREFORMED: synthetic rubber per Spec MIL-P-5516, Class B; 15/16 in. od by 3/4 in. id by 3/32 in. thk nom; ANA Std part AN6227-14; Hazeltine Elec (contr) part 287-1004P14.	For mounting F401 thru F416 and spare fuses
O402		GASKET: neoprene per JAN-R-1149, Class I; 29/32 in. id; two mtg holes 7/32 in. dia on 1-5/16 in. mtg centers; saddle type shape 1-1/8 in. w by 1-3/4 in. lg by 1/32 in. thk over-all; Hazeltine Elec (mfr and contr) part 1591-1019P1.	For mounting F401 thru F416 and spare fuses
O403	F	WASHER, NON-METALLIC: rd; black neoprene per JAN-R-1149, Class 1; 3/16 in. id by 11/16 in. od by 1/8 in. thk; Hazeltine Elec (mfr and contr) part 1587-1096P1; (same as O113).	Bushing for H401
O404		COVER, ELECTRICAL CONNECTOR: metallic material; resistant to corrosion; 1-3/16 in. dia by 5/8 in. h excluding chain; 1 in.-20 internal thd for mtg; Industrial Products Co (mfr) part 525; Hazeltine Elec (contr) part 218-1012P1.	For J410 and J420
O405		SHELL, ELECTRICAL CONNECTOR: aluminum; tin plated, clear lacquer coated; cylindrical body w/sq mtg flange; 1-9/32 in. lg by 1-9/32 in. w by 53/64 in. h over-all; 4 mtg holes 0.120 in. dia on 31/32 in. by 31/32 in. mtg centers; 1 in.-20 NEF-2 external thd; Cannon Electric Co (mfr) part 2182-5; Hazeltine Elec (contr) part 1593-1085P1.	For J410
O406	A	GASKET: gum rubber; 1-9/32 in. lg by 1-9/32 in. w by 1/32 in. thk over-all; 13/16 in. dia of aperture; four 1/8 in. dia bolt holes spaced 31/32 in. by 31/32 in. c to c, ea bolt hole spaced 5/32 in. from outer edge; corners rounded on 1/16 in. radius; Hazeltine Elec (mfr and contr) part 1591-1016P1.	For J410
O407	C	COVER, ELECTRICAL CONNECTOR: metallic material; resistant to corrosion; 3/4 in. dia by 5/8 in. h excluding chain; 5/8 in.-24 internal thd for mtg; American Phenolic Corp (mfr) part 83-1AC; Hazeltine Elec (contr) part 218-1006P1; (same as O303).	Cap for J414, J417, J418 and J419
O408		Not used.	
O409	C	PLATE, REINFORCEMENT: for terminal board; non-magnetic corrosion-resisting steel; passivated finish; 7/8 in. lg by 13/32 in. w by 0.032 in. thk over-all; two 0.187 to 0.209 in. dia mtg holes spaced 1/2 in. c to c; Hazeltine Elec (mfr and contr) part 224-1003P3.	For E401 and E404
O410		Not used.	
O411	F	SPRING, HELICAL, EXTENTION: both ends identical; 0.094 in. radius of hook; hooks at 90 deg and centered; 0.031 in. dia steel music wire; 1 in. free lg inside of hooks, 1-1/16 in. free over-all lg by 1/4 in. od by 3/16 in. id; Hazeltine Elec (mfr and contr) part 1591-1029P1.	Resistor panel door spring

TABLE 8-3. MAINTENANCE PARTS LIST — Cont'd.

REF. DESIG.	NOTES	NAME AND DESCRIPTION	LOCATING FUNCTION
O412	A	GASKET: neoprene, Spec JAN-R-1149, Class 1; 10-1/8 in. lg by 3-5/8 in. w by 3/32 in. thk; 12 bolt holes, 13/64 in. dia; 3 bolt holes 0.228 in. dia; Hazeltine Elec (mfr and contr) part 1591-1020P1.	For fuse panel
O413	A	GASKET: synthetic rubber, Spec JAN-R-1149, Type 1, Class 1; 1-5/8 in. lg by 1-5/8 in. w by 0.031 in. thk over-all, 1-1/4 in. dia of aperture, four 0.128 in. dia bolt holes spaced 1.250 in. by 1.250 in. c to c, ea bolt hole spaced 3/16 in. from outer edge; corners rounded on 3/16 in. radius; Hazeltine Elec (mfr and contr) part 287-1030P9.	For J409
O414		COVER, ELECTRICAL CONNECTOR: metallic material; resistant to corrosion; 1-11/16 in. dia by approx 7/16 in. h excluding chain; 1-1/2 in. -18 internal thd for mtg; American Phenolic Corp (mfr) part 9760-24; Hazeltine Elec (contr) part 218-1010P1.	For J404
O415	B	COVER, ELECTRICAL CONNECTOR: metallic material; resistant to corrosion; 1-59/64 in. dia by approx 1/2 in. h excluding chain; 1-3/4 in. -18 internal thd for mtg; American Phenolic Corp (mfr) part 9760-28; Hazeltine Elec (contr) part 218-1001P11.	For J401, J402, J408 and J412
O416 thru O418		Not used.	
O419	B	COVER, ELECTRICAL CONNECTOR: metallic material; resistant to corrosion; 1-9/16 in. dia by approx 7/16 in. h excluding chain; 1-3/8 in. -18 internal thd for mtg; American Phenolic Corp (mfr) part 9760-22; Hazeltine Elec (contr) part 218-1001P9.	For J409
O420	A	GASKET: synthetic rubber, Spec JAN-R-1149, Type 1, Class 1; 1-9/32 in. lg by 1-9/32 in. w by 0.031 in. thk over-all, 7/8 in. dia of aperture, four 0.128 in. dia bolt holes spaced 0.969 in. by 0.969 in. c to c, ea bolt hole spaced 5/32 in. from outer edge; corners rounded on 5/32 in. radius; Hazeltine Elec (mfr and contr) part 287-1030P3.	For J409
O421	A	GASKET: synthetic rubber, Spec JAN-R-1149, Type 1, Class 1; 2 in. lg by 2 in. w by 0.039 in. thk over-all; 1-5/8 in. dia of aperture; four 0.152 in. dia bolt holes spaced 1.563 in. by 1.563 in. c to c; ea bolt hole spaced 7/32 in. from outer edge; corners rounded on 7/32 in. radius; Hazeltine Elec (mfr and contr) part 287-1030P11.	For J401, J402, J408 and J412
O422	A	GASKET: synthetic rubber, Spec JAN-R-1149, Type 1, Class 1; 2-1/4 in. in. lg by 2-1/4 in. w by 0.031 in. thk over-all; 1-7/8 in. dia of aperture; four 0.180 in. dia bolt holes spaced 1.750 in. by 1.750 in. c to c; ea bolt hole spaced 1/4 in. from outer edge; corners rounded on 1/4 in. radius; Hazeltine Elec (mfr and contr) part 287-1030P13.	For J403 and J406
O423	A	GASKET: synthetic rubber, Spec JAN-R-1149, Type 1, Class 1; 1 in. lg by 1 in. w by 0.031 in. thk over-all; 5/8 in. dia of aperture; four 0.128 in. dia bolt holes spaced 0.719 in. by 0.719 in. c to c; ea bolt hole spaced 9/64 in. from outer edge; corners rounded on 9/64 in. radius; Hazeltine Elec (mfr and contr) part 287-1032P3.	For J413 thru J419
O424	A	GASKET: synthetic rubber, Spec JAN-R-1149, Type 1, Class 1; 1-3/4 in. lg by 1-3/4 in. w by 0.031 in. thk over-all; 1-3/8 in. dia of aperture; four 0.152 in. dia bolt holes spaced 1.375 in. by 1.375 in. c to c; ea bolt hole spaced 3/16 in. from outer edge; corners rounded on 3/16 in. radius; Hazeltine Elec (mfr and contr) part 287-1032P7.	For J404 and J405

TABLE 8-3. MAINTENANCE PARTS LIST — Cont'd.

REF. DESIG.	NOTES	NAME AND DESCRIPTION	LOCATING FUNCTION
O425	C	GASKET: DuPont Fairprene no. 5580 coated w/DC-4 compound; 3-1/8 in. lg by 3-1/8 in. w by 1/32 in. thk over-all; 2-17/32 in. dia of aperture; four 0.201 in. dia bolt holes spaced 2-3/8 in. by 2-3/8 in. c to c; ea bolt hole spaced 3/8 in. from outer edge; corners rounded on 1/8 in. radius; Hazeltine Elec (mfr and contr) part 1591-1058P1.	For J407
O426	F	PLATE, REINFORCEMENT: for terminal board; non-magnetic corrosion resisting steel; passivate finish; 3/4 in. lg by 5/16 in. w by 0.031 in. thk over-all; two mtg holes 11/64 in. spaced 7/16 in. c to c; Hazeltine Elec (mfr and contr) part 224-1003P2; (same as O109).	For E404
O427	F	PLATE, REINFORCEMENT: for terminal board; brass, nickel plated; 7/8 in. lg by 3/8 in. w by 0.122 in. thk over-all; two no. 8-32 NC-2 tapped mtg holes spaced 1/2 in. c to c; Hazeltine Elec (mfr and contr) part 224-1008P3; (same as O134).	For E403
O428	F	PLATE, REINFORCEMENT: for terminal board; brass, nickel plated; 3/4 in. lg by 5/16 in. w by 0.122 in. thk over-all; two no. 6-32 NC-2 tapped mtg holes spaced 7/16 in. c to c; Hazeltine Elec (mfr and contr) part 224-1008P2.	For E404
O429	F	PLATE, REINFORCEMENT: for terminal board; non-magnetic corrosion-resisting steel, passivated finish; 9/16 in. lg by 17/64 in. w by 0.032 in. thk over-all; two 0.144 to 0.161 in. dia mtg holes spaced 5/16 in. c to c; Hazeltine Elec (mfr and contr) part 224-1003P1; (same as O124).	For E405
O430	F	PLATE, REINFORCEMENT: for terminal board; brass, nickel plated; 9/16 in. lg by 1/4 in. w by 0.122 in. thk over-all; two no. 4-40 NC-2 tapped mtg holes spaced 5/16 in. c to c; Hazeltine Elec (mfr and contr) part 224-1008P1.	For E405
O431	C	CLIP, ELECTRICAL: phosphor bronze, silver plated; 1-7/32 in. lg by 7/8 in. w by 3/4 in. h excluding terminal and locating tab; Hazeltine Elec (mfr and contr) part 1591-1057G1.	For F412, F413 and spare fuse
O432		CLIP, ELECTRICAL: phosphor bronze, silver plated; 15/16 in. lg by 5/8 in. w by 5/8 in. h excluding terminals and locating tab; Hazeltine Elec (mfr and contr) part 343-1014G1.	For F414, F415 and spare fuse
O433		RETAINER, CAPACITOR: ferrule type; for mtg on 1 in. 1-1/16 in. dia capacitor; spring steel, resistant to salt water; 1-3/32 in. lg by 1 in. w by 19/32 in. h over-all; Prestole Corp (mfr) part 500-1; Hazeltine Elec (contr) part 343-1003P6.	For C404 and C406
O434		BOOT, DUST AND MOISTURE SEAL: c/o silicone rubber sealing sleeve, neoprene "O" ring gasket, and brass, nickel plated packing nut; 0.750 in. w across flats by 5/16 in. thk over-all; mounts by 15/32 in.-32 NS-2 thd packing nut; resistant to salt water; Radio Frequency Labs (mfr) part H-1267; Hazeltine Elec (contr) part 203-1003G1; (same as O129).	Water seal for S401
O435		RING, RETAINING: steel; 0.469 in. id by 0.032 in. thk excluding keys; Cutler Hammer Inc (mfr) part 29-761; Hazeltine Elec (contr) part 362-1016P1; (same as MP111).	For S401 shaft
O436	F	SPRING, LATCH: flat type; for chassis latch; clock spring steel no. 1095, cadmium plated; 4-5/8 in. lg by 7/16 in. w by 0.062 in. thk; two 0.187 in. dia mtg holes spaced 1 in. c to c; Hazeltine Elec (mfr and contr) part/dwg SP-1605; (same as O127).	Latch spring for H425

TABLE 8-3. MAINTENANCE PARTS LIST – Cont'd.

REF. DESIG.	NOTES	NAME AND DESCRIPTION	LOCATING FUNCTION
O437		PACKING, PREFORMED: synthetic rubber per Spec MIL-P-5516, Class B; 9/16 in. od by 3/8 in. id by 3/32 in. thk nom; ANA Std part AN6227-8; Hazeltine Elec (contr) part 287-1004P8.	Gasket for A415
O438 and O439		Not used.	
O440		COVER, ELECTRICAL CONNECTOR: metallic material; resistant to corrosion; 1-7/16 in. dia by approx 7/16 in. h excluding chain; 1-1/4 in.-18 internal thd for mtg; American Phenolic Corp (mfr) part 9760-20; Hazeltine Elec (contr) part 218-1001P23.	Protective cap for J411
O441	A	GASKET: synthetic rubber, Spec JAN-R-1149, Type 1, Class 1; 1-1/2 in. lg by 1-1/2 in. w by 0.031 in. thk over-all; 1-1/8 in. dia of aperture; four 0.128 in. dia bolt holes spaced 1.156 in. by 1.156 in. c to c; ea bolt hole spaced 11/64 in. from outer edge; corners rounded on 11/64 in. radius; Hazeltine Elec (mfr and contr) part 287-1030P7.	For J411
O442	C	ROLLER, BEARING: cylindrical; brass, cadium plated; flat end; solid; 1-1/16 in. dia by 7/16 in. lg; 0.314 to 0.315 in. dia mtg hole in center; Hazeltine Elec (mfr and contr) part 1620-1014P1; (same as O140).	For inner case upper mount assembly
O443		Not used.	
O444		FILTER, AIR CONDITIONING: permanent type; aluminum mesh screen type w/drain hole in ea corner; aluminum frame; 8 in. lg by 8 in. w by 1-1/2 in. h over-all; American Air Filter Co Inc (mfr) type C56-1405; Hazeltine Elec (contr) part SN-1035-3; (same as O117).	For unit inner case
O445	C	CLIP, RETAINING: stainless steel, per Spec AISI type 302; 75,000 psi min tensile strength; B94 Rockwell hardness; Hazeltine Elec (mfr and contr) part 1620-1005P1; (same as O102).	Secures H418 to A418
O446		CLIP, RETAINING: stainless steel per Spec AISI type 302; 75,000 psi min tensile strength; B94 Rockwell hardness; Hazeltine Elec (mfr and contr) part 1620-1006P1; (same as O139).	For A418
O447	C	BUSHING, TAPERED: stainless steel per Spec MIL-S-853A(SHIPS), Class 7, Type A; passivated; 5/8 in. dia one end, tapered to 1/2 in. dia other end; 5/8 in. lg over-all; w/center hole 0.390 in. dia by 1/2 in. deep counterbored to 0.328 in. dia by 1/8 in. deep; Hazeltine Elec (mfr and contr) part 204-1009P1; (same as O142).	For H404 and H405
O448	C	RUBBER CHANNEL: synthetic rubber; "U" shaped channel; 1/2 in. w by 7/32 in. thk; 1/16 in. thk wall; Atlantic India Rubber Works Inc (mfr) part X-427; Hazeltine Elec (contr) part 287-1016P1.	For A414
O449	C	RUBBER STRIP, CELLULAR: sponge rubber; rectangular strip; 23-1/16 in. lg by 1/2 in. w by 3/16 in. thk; Globe Rubber Works Inc (mfr) type 315; Hazeltine Elec (contr) part 287-1034P2; (same as O114).	For panel gasket
O450		Not used.	

TABLE 8-3. MAINTENANCE PARTS LIST — Cont'd.

REF. DESIG.	NOTES	NAME AND DESCRIPTION	LOCATING FUNCTION
O451	C	RUBBER STRIP, CELLULAR: sponge rubber; rectangular strip; 21-1/4 in. lg by 7/8 in. w by 3/16 in. thk; four holes 3/8 in. dia spaced 2-1/4 in. from ea end, 2 holes ea end 5-1/2 in. apart; 5-3/4 in. space in center between holes; Globe Rubber Works Inc (mfr) type 315; Hazeltine Elec (contr) part 1587-1120P1; (same as O130).	Front panel gasket
O452	C	BEARING, SLEEVE: aluminum, type 17S-T4; anodized finish; 11/16 in. lg by 1/2 in. dia over-all; flange 3/8 in. w by 1/2 in. dia; body 3/8 in. dia; 0.201 in. dia through hole; Hazeltine Elec (mfr and contr) part 1591-1067P1.	For HR401
O453		Not used.	
O454	C	CLIP, SPRING TENSION: holds air cleaner; 0.020 in. thk berylco 25 alloy half hard temper; cadmium plated; 2 in. lg approx 23/32 in. w by approx 1-1/4 in. h; 2 mtg holes 0.169 in. dia spaced 1 in. c to c; Hazeltine Elec (mfr and contr) part 1620-1016P1.	For O454
O455 thru O458		Not used.	
O459	F	BLOCK, MOUNTING: for handles; aluminum alloy, anodized and painted USMC green; rectangular; 4-3/4 in. lg by 7/8 in. w by 7/8 in. h over-all; 2 mtg holes 0.348 in. dia spaced 2 in. c to c; Hazeltine Elec (mfr and contr) part 1620-1010G1; (same as O144).	Mounting block for H424
O460		RING, RETAINING: carbon spring steel; 0.338 in. id by 0.025 in. thk; Waldes Kohinoor Inc (mfr) part 5100-37-MI; Hazeltine Elec (contr) part 362-1005P13.	For H439
O461	C	VALVE, SAFETY RELIEF: equalizes internal pressure of container to within 2.5 psi of external atmospheric pressure range of 4.2 to 15 psi; aluminum body, painted USMC green; mounts by 3/4 in.-16 NF-2 by 19/32 in. lg thd bushing; body 2-3/4 in. dia by 9/16 in. h; incl seal, plain washer, lockwasher and hex nut for mtg; A. Schrader's Son (mfr) part 4594A; Hazeltine Elec (contr) part 381-1012P1; (same as O44).	Air pressure valve for A418
O462		CLIP, ELECTRICAL: phosphor bronze, silver plated; 15/16 in. lg by 5/8 in. w by 5/8 in. h; Navy dwg RE28AA116; Hazeltine Elec (contr) part 343-1013P2.	For F414, F415 and spare fuses
O463	A	GASKET: neoprene, Spec JAN-R-1149, Class 1; 2-7/8 in. od by 1/16 in. thk over-all; 2-1/16 in. dia of aperture; 3 bolt holes 0.125 in. dia spaced 120 deg apart on 2-17/32 in. dia bolt circle; Hazeltine Elec (mfr and contr) part 1591-1092P1.	For M502
O464		GASKET: synthetic rubber; 2-11/16 in. od by 2-1/8 in. id by 3/32 in. thk; 6 mtg holes 3/32 in. dia equally spaced on 2.44 in. dia bolt circle; center hole countersunk 2-1/4 in. dia by 1/16 in. deep on one surface; Neosil Corp (mfr) part 1006-56; Hazeltine Elec (contr) part 287-1035P1.	For M401 and M403

TABLE 8-3. MAINTENANCE PARTS LIST — Cont'd.

REF. DESIG.	NOTES	NAME AND DESCRIPTION	LOCATING FUNCTION
P401		CONNECTOR, PLUG, ELECTRICAL: 22 contacts; one connector mating end; 4 female contacts; rated 41 amp, 700 v dc, 500 v ac; 18 female contacts; rated 22 amp, 700 v dc, 500 v ac; dielectric material per MIL-C-5015B; straight shape; 2-5/16 in. max lg by 1-31/32 in. max od over-all; locking type, 1-3/4 in.-18 thd coupling nut; w/o conduit nut, 1-7/16 in.-18 external thd; pressurized; Spec MIL-C-5015B; AN type AN3106C-28-11S; Hazeltine Elec (contr) part 276-1160P5; (same as P301).	Cable termination for W7
P402		CONNECTOR, PLUG, ELECTRICAL: 12 rd female contacts; one connector mating end; 6 rd female contacts; rated 41 amp, 1250 v dc, 900 v ac; 6 rd female contacts; rated 22 amp, 1250 v dc, 900 v ac; straight shape; 2.251 in. lg by 1.969 in. dia over-all; locking type 1-3/4 in.-18 thd coupling nut; w/o conduit nut, 1-7/16 in.-18 external thd; pressurized; Spec MIL-C-5015B; AN type AN3106C-28-9S; Hazeltine Elec (contr) part 276-1160P6.	Cable termination for W10
P403		CONNECTOR, PLUG, ELECTRICAL: 30 rd female contacts; one connector mating end; 6 rd female contacts; rated 41 amp, 700 v dc, 500 v ac; 24 rd female contacts; rated 22 amp, 700 v dc, 500 v ac; straight shape; 2.376 in. lg by 2.219 in. dia over-all; locking type 2 in.-18 thd coupling nut; w/o conduit nut, 1-3/4 in.-18 thd on shell for mating w/ coupling nut; pressurized; Spec MIL-C-5015B; AN type AN3106C-32-8S; Hazeltine Elec (contr) part 276-1159P3.	Cable termination for W11
P404		CONNECTOR, PLUG, ELECTRICAL: 2 rd female contacts; one connector mating end; rated 135 amp, 700 v dc, 500 v ac; straight shape; 2.376 in. lg by 2.219 in. dia over-all; locking type; 1-1/2 in.-18 thd coupling nut; w/o conduit nut, 1-7/16 in.-18 external thd; pressurized; Spec MIL-C-5015B; AN type AN3106C-24-9S; Hazeltine Elec (contr) part 276-1170P2.	Cable termination for W15
P405		Same as P404.	Cable termination for W16
P406		CONNECTOR, PLUG, ELECTRICAL: 23 rd female contacts; one connector mating end; 5 rd female contacts; rated 41 amp, 1250 v dc, 900 v ac; 18 rd female contacts; rated 22 amp, 1250 v dc, 900 v ac; straight shape; 2-7/16 in. lg by 2-7/32 in. dia over-all; locking type; 2 in.-18 thd coupling nut; w/o conduit nut, 1-3/4 in.-18 external thd; pressurized; Spec MIL-C-5015B; AN type AN3106C-32-13S; Hazeltine Elec (contr) part 276-1159P4.	Cable termination for W1
P407		CONNECTOR, PLUG, ELECTRICAL: 52 rd female contacts; one connector mating end; right angle type, 5-3/16 in. lg by 4-1/16 in. h by 3-1/8 in. w over-all; molded melamine insert; internal coupling thd 2-13/16 in.-18 NS-2 by 9/16 in. lg; Cannon Elec Co (mfr) part AK-G52-23CH-1-1/4; Hazeltine Elec (contr) part 276-1148P1.	Cable termination for W4
P408		CONNECTOR, PLUG, ELECTRICAL: 26 rd female contacts; one connector mating end; contacts rated 22 amp, 700 v dc, 500 v ac; dielectric material per MIL-C-5015B; straight shape; 2.251 in. lg by 1.969 in. dia over-all; locking type, 1-3/4 in.-18 thd coupling nut; w/o conduit nut, 1-7/16 in.-18 on shell for mating w/coupling nut; pressurized; Spec MIL-C-5015B; AN type AN3106C-28-12S; Hazeltine Elec (contr) part 276-1160P4.	Cable termination for W8
P409 thru P412		Not used.	

TABLE 8-3. MAINTENANCE PARTS LIST — Cont'd.

REF. DESIG.	NOTES	NAME AND DESCRIPTION	LOCATING FUNCTION
P413		CONNECTOR, PLUG, ELECTRICAL: rf; single rd male coaxial contact; one connector mating end; 50 ohms impedance, 500 v peak; AN type UG-18B/U; 1-7/8 in. lg by 25/32 in. dia over-all; teflon insert; straight shape; coupling nut w/internal thd 5/8 in. -24 NEF-2 one end; weatherproof; Spec MIL-C-71A; Navy dwg RE49F402; Hazeltine Elec (contr) part 276-1029P1; (same as P302).	Cable termination for W3
P414		Not used.	
P415		Same as P413.	Cable termination for W14
P416		Same as P413.	Cable termination for W9
P417 thru P419		Not used.	
P420	C	DUMMY CONNECTOR, PLUG: 7 male contacts; one connector mating end; rated 22 amp, 700 v dc, 500 v ac; straight shape; 1-1/4 in. max dia by approx 1-3/8 in. lg excluding chain and rivet assy; w/inclosing shell; resistant to corrosion; polarized; locking type, w/1 in. -20 NEF-2 internal thd coupling nut; retainer ring type grounding lug back end of connector potted and marked "P420"; American Phenolic Corp (mfr) type 97-3106-16S-1P(517) modified; Hazeltine Elec (contr) part/dwg PL-1431.	Shorting plug
P421		Not used.	
P422		CONNECTOR, PLUG, ELECTRICAL: 3 rd male contacts; one connector mating end; rated 22 amp, 700 v dc, 500 v ac; straight shape; 1-11/16 in. lg by 1-5/32 in. dia over-all; locking type, w/7/8 in. -20 thd coupling nut; w/o conduit nut, 3/4 in. -20 external thd; enviornment resistant; Spec MIL-C-5015B; AN type AN3106A-14S-1S; Hazeltine Elec (contr) part PL-1419; (same as P310).	Mates J422
R401	B	RESISTOR, FIXED, COMPOSITION: 100,000 ohms, ±5%; 1 w; F characteristic; body 0.760 in. max lg by 0.264 in. max od; insulated; Spec MIL-R-11A; MIL type RC30BF104J; Hazeltine Elec (contr) part 280-1002P145.	Plate load V410
R402	B	RESISTOR, FIXED, WIREWOUND: inductive winding; 6300 ohms, ±5%; 38 w; 275 deg C max continuous operating temp, 25 deg C ambient temp; body 4 in. lg by 29/32 in. max od by 9/16 in. max id; protective covering per Spec MIL-R-26B, resistant to humidity; terminals 23/64 in. max lg by 11/64 in. min to 21/64 in. max w; Spec MIL-R-26B; MIL type RW35G632; Hazeltine Elec (contr) part 280-1010P77.	Series dropping
R403	B	RESISTOR, FIXED, WIREWOUND: inductive winding; 8000 ohms, ±5%; 18 w; 275 deg C max continuous operating temp, 25 deg C ambient temp, body 3 in. lg by 19/32 in. max od by 5/16 in. id; protective covering per Spec MIL-R-26B, resistant to humidity; terminals 21/64 in. max lg by 11/64 in. min to 21/64 in. max w; Spec MIL-R-26B; MIL type RW33G802; Hazeltine Elec (contr) part 280-1008P79.	Series dropping

TABLE 8-3. MAINTENANCE PARTS LIST — Cont'd.

REF. DESIG.	NOTES	NAME AND DESCRIPTION	LOCATING FUNCTION
R404	B	RESISTOR, FIXED, WIREWOUND: inductive winding; 50 ohms, ±5%; 38 w; 275 deg C max continuous operating temp, 25 deg C ambient temp; body 4 in. lg by 29/32 in. max od by 9/16 in. max id; protective covering per Spec MIL-R-26B, resistant to humidity; terminals 23/64 in. max lg by 11/64 in. min to 21/64 in. max w; Spec MIL-R-26B; MIL type RW35G500; Hazeltine Elec (contr) part 280-1010P35.	Voltage bleeder
R405	B	RESISTOR, FIXED, COMPOSITION: 4700 ohms, ±5%; 1 w; F characteristic; body 0.760 in. max lg by 0.264 in. max od; insulated; Spec MIL-R-11A; MIL type RC30BF472J; Hazeltine Elec (contr) part 280-1002P97; (same as R112).	Grid for V407
R406		Same as R405.	Grid for V407
R407		Same as R405.	Grid for V408
R408		Same as R405.	Grid for V408
R409		Same as R405.	Grid for V409
R410		Same as R405.	Grid for V409
R411 thru R413		Not used.	
R414		Same as R401.	Plate load V407
R415	B	RESISTOR, FIXED, COMPOSITION: 68,000 ohms, ±5%; 1 w; F characteristic; body 0.760 in. max lg by 0.264 in. max od; insulated; Spec MIL-R-11A; MIL type RC30BF683J; Hazeltine Elec (contr) part 280-1002P139.	Plate load V409
R416		RESISTOR, VARIABLE: composition; single section; 50,000 ohms, ±10%; 2 w; std A taper; body and case material per Spec JAN-R-94; inclosed; 1-3/32 in. max dia by 21/32 in. max depth; single rd metal shaft 1/4 in. dia by 7/8 in. lg from mtg surface; 0.047 in. w by 0.063 in. deep slot; Spec JAN-R-94; JAN type RV4ATSD503A; Hazeltine Elec (contr) part 240-1004P17.	Bias control
R417	B	RESISTOR, FIXED, COMPOSITION: 47,000 ohms, ±5%; 1 w; F characteristic; body 0.760 in. max lg by 0.264 in. max od; insulated; Spec MIL-R-11A; MIL type RC30BF473J; Hazeltine Elec (contr) part 280-1002P133.	Voltage divider
R418		Same as R417.	Voltage divider
R419		Same as R415.	Voltage divider
R420		Same as R401.	Plate load V417
R421		Same as R405.	Grid V414
R422		Same as R405.	Grid for V415
R423		Same as R405.	Grid for V416

TABLE 8-3. MAINTENANCE PARTS LIST — Cont'd.

REF. DESIG.	NOTES	NAME AND DESCRIPTION	LOCATING FUNCTION
R424		RESISTOR, FIXED, COMPOSITION: body style no. 14, Ref Dwg Group 2; 100 ohms, ±5%; 2 w; F characteristic; body 0.728 in. max lg by 0.336 in. max od; insulated; Spec MIL-R-11A, MIL type RC42BF101J; Hazeltine Elec (contr) part 280-1017P37.	Cathode equalizing for V414
R425		Not used.	
R426		Same as R424.	Cathode equalizing for V415
R427	B	RESISTOR, FIXED, COMPOSITION: 220,000 ohms, ±5%; 1 w; F characteristic; body 0.760 in. max lg by 0.264 in. max od; insulated; Spec MIL-R-11A, MIL type RC30BF224J; Hazeltine Elec (contr) part 280-1002P157; (same as R127).	Voltage divider
R428		Not used.	
R429	B	RESISTOR, FIXED, COMPOSITION: 15,000 ohms, ±5%; 1 w F characteristic; body 0.760 in. max lg by 0.264 in. max od; insulated; Spec MIL-R-11A; MIL type RC30BF153J; Hazeltine Elec (contr) part 280-1002P115.	Voltage divider
R430 and R431		Not used.	
R432		Same as R417.	Voltage divider
R433		Same as R416.	Bias control
R434	B	RESISTOR, FIXED, COMPOSITION: 22,000 ohms, ±5%; 1 w; F characteristic; body 0.760 in. max lg by 0.264 in. max od; insulated; Spec MIL-R-11A; MIL type RC30BF223J; Hazeltine Elec (contr) part 280-1002P121.	Voltage divider
R435	B	RESISTOR, FIXED, COMPOSITION: 33,000 ohms, ±5%; 1 w; F characteristic; body 0.760 in. max lg by 0.264 in. max od; insulated; Spec MIL-R-11A; MIL type RC30BF333J; Hazeltine Elec (contr) part 280-1002P127; (same as R351).	Voltage divider
R436 and R437		Not used.	
R438		Same as R424.	Cathode equalizing for V416
R439 thru R442		Not used.	
R443		RESISTOR, VARIABLE: wirewound element; single section; 500 ohms, ±10%; 25 w; std A taper; body and case material per Spec MIL-R-22A; inclosed; 1.68 in. max dia by 1.41 in. max depth; single rd metal shaft, 1/4 in. dia by 7/8 in. lg from mtg surface, w/slot 0.047 in. w by 0.063 in. deep; Spec MIL-R-22A; MIL type RP101SD501KK; Hazeltine Elec (contr) part 240-1085P2.	Adjustment for time delay relay

TABLE 8-3. MAINTENANCE PARTS LIST — Cont'd.

REF. DESIG.	NOTES	NAME AND DESCRIPTION	LOCATING FUNCTION
R444		Same as R415.	Shunt resistor
R445	B	RESISTOR, FIXED, COMPOSITION: 33,000 ohms, ±5%; 1/2 w; F characteristic; body 0.416 in. max lg by 0.161 in. max od; insulated; Spec MIL-R-11A; MIL type RC20BF333J; Hazeltine Elec (contr) part 280-1015P127.	Voltage dropping
R446	B	RESISTOR, FIXED, COMPOSITION: 75 ohms, ±5%; 1/2 w; F characteristic; body 0.416 in. max lg by 0.161 in. max od; Spec MIL-R-11A; MIL type RC20BF750J; Hazeltine Elec (contr) part 280-1015P33.	Voltage divider
R447		Same as R446.	Voltage divider
R448	B	RESISTOR, FIXED, COMPOSITION: 300 ohms, ±5%; 1/2 w; F characteristic; body 0.416 in. max lg by 0.161 in. max od; insulated; Spec MIL-R-11A; MIL type RC20BF301J; Hazeltine Elec (contr) part 280-1015P54.	Voltage divider
R449		Same as R448.	Voltage divider
R450	B	RESISTOR, FIXED, COMPOSITION: 220 ohms, ±5%; 1/2 w; F characteristic; body 0.416 in. max lg by 0.161 in. max od; insulated; Spec MIL-R-11A; MIL type RC20BF221J; Hazeltine Elec (contr) part 280-1015P49; (same as R231).	Shunt resistor
R451		RESISTOR, FIXED, WIREWOUND: inductive winding, 8000 ohms, ±5%; 38 w; 275 deg C max continuous operating temp, 25 deg C ambient temp; body 4 in. lg by 29/32 in. max od by 9/16 in. max id; protective covering per Spec MIL-R-26B, resistant to humidity; terminals 23/64 in. max lg by 11/64 in. min to 21/64 in. max w; Spec MIL-R-26B; MIL type RW35G802; Hazeltine Elec (contr) part 280-1010P79.	Series dropping
R452		Same as R401.	Voltage divider
R453	B	RESISTOR, FIXED, COMPOSITION: 470,000 ohms, ±5%; 1 w; F characteristic; body 0.760 in. max lg by 0.264 in. max od; insulated; Spec MIL-R-11A; MIL type RC30BF474J; Hazeltine Elec (contr) part 280-1002P169.	Voltage divider
R454	B	RESISTOR, FIXED, COMPOSITION: 100,000 ohms, ±5%; 2 w; F characteristic; body 0.728 in. max lg by 0.336 in. max od; insulated; Spec MIL-R-11A; MIL type RC42BF104J; Hazeltine Elec (contr) part 280-1017P145.	Series dropping
R455		Same as R454.	Series dropping
R456		Same as R454.	Series dropping
R457		Same as R454.	Series dropping
R458	B	RESISTOR, FIXED, COMPOSITION: 330,000 ohms, ±5%; 1 w; F characteristic; body 0.760 in. max lg by 0.264 in. max od; insulated; Spec MIL-R-11A; MIL type RC30BF334J; Hazeltine Elec (contr) part 280-1002P163; (same as R113).	Series dropping
R459	B	RESISTOR, FIXED, COMPOSITION: 470 ohms, ±5%; 1/2 w; F characteristic; body 0.416 in. max lg by 0.161 in. max od; insulated; Spec MIL-R-11A; MIL type RC20BF471J; Hazeltine Elec (contr) part 280-1015P61.	Screen resistor

TABLE 8-3. MAINTENANCE PARTS LIST — Cont'd.

REF. DESIG.	NOTES	NAME AND DESCRIPTION	LOCATING FUNCTION
R460		Same as R459.	Screen resistor
R461		Same as R459.	Screen resistor
R462		Same as R434.	Voltage divider
S401		SWITCH, TOGGLE: spst; 2 positions; electrical ratings per Spec JAN-S-23, body 1-9/64 in. max lg by 41/64 in. max w by 1-1/16 in. max h incl terminals, excluding bushing and handle; bat type handle 11/16 in. lg excluding bushing; 1 locking on and 1 locking off position; Spec JAN-S-23; JAN type ST42A; Hazeltine Elec (contr) part 228-1001P1; (same as S101).	Antenna blower
S402		SWITCH, PUSH: dpst; rated 12 amp at 125 v or 6 amp at 250 v ac and dc for nom load; momentary action, normally open, w/manual latch; 1-7/8 in. lg by 53/64 in. w by 1-7/64 in. h excluding external actuator, 2-13/64 in. high incl actuator; Cutler Hammer Inc (mfr) part A90-877; Hazeltine Elec (contr) part 228-1003P1; (same as S153).	Interlock switch
S403		SWITCH, THERMOSTATIC: spst double break; contacts open on temp increase, opens at 15 deg C, closes at 0 deg C; bimetal element; rated 8 amp at 125 v ac or 10 amp at 30 v dc non-inductive; 0.750 in. max lg by 0.345 in. w by 1-1/64 in. h over-all; Stevens Mfg Co (mfr) type M; Hazeltine Elec (contr) part 271-1091P2; (same as S155).	Heater thermostat HR401
S404		SWITCH, TOGGLE: dpst; 2 positions; electrical ratings per Spec JAN-S-23; body 1-21/64 in. max lg by 49/64 in. max w by 1-1/16 in. max h incl terminals, excluding bushing and handle; bat type handle 11/16 in. lg excluding bushing; 1 locking on and 1 locking off position; Spec JAN-S-23; JAN type ST52K; Hazeltine Elec (contr) part 228-1002P1.	Interlock switch
T401		TRANSFORMER, POWER, STEP-DOWN: fully inclosed hermetically sealed metal case; primary 115 v, 400 cps, single phase; 5 secondary windings; 1st secondary 6.3 v at 15 amp center tapped, 2nd secondary 5.0 v at 6.0 amp, 3rd secondary 5.0 v at 4.0 amp, 4th secondary 5.0 v at 2.0 amp, 5th secondary 6.3 v at 0.63 amp; 1780 v rms insulation; air-cooled; wax impregnated and filled; case 3-3/4 in. lg by 3-3/4 in. w by 4-5/16 in. h; Spec MIL-T-27; Hazeltine Elec (mfr and contr) part 292-1241G1.	Filament transformer
T402		TRANSFORMER, STEP-UP: fully inclosed hermetically sealed metal case; primary 115 v, 400 cps, single phase; 2 secondary windings; 1st secondary 1160 v at 250 ma, 670 v at 400 ma center tapped, 2nd secondary 1040 v at 44 ma center tapped; 1780 v rms primary insulation, 2500 v rms secondary insulation; air-cooled; wax impregnated and filled; case 5-15/16 in. lg by 4-31/32 in. w by 6-3/16 in. h; Spec MIL-T-27; Hazeltine Elec (mfr and contr) part TR1563.	Plate transformer
T403		TRANSFORMER, POWER, STEP-DOWN: fully inclosed hermetically sealed metal case; primary 115 v, 400 cps, single phase; secondary 37.7 v at 6.35 amp; 1780 v rms insulation; air-cooled; wax impregnated and filled; case 4 in. lg by 4 in. w by 4-7/8 in. h; Spec MIL-T-27; Hazeltine Elec (mfr and contr) part 292-1249G1.	Plate transformer
TB401	C	TERMINAL BOARD: nylon base phenolic formica board; incl 2 turret type terminals; 1-1/4 in. lg by 19/32 in. w by 13/32 in. h over-all excluding terminals; marked "R444"; Hazeltine Elec (mfr and contr) part 1587-1080G7.	For R444

TABLE 8-3. MAINTENANCE PARTS LIST — Cont'd.

REF. DESIG.	NOTES	NAME AND DESCRIPTION	LOCATING FUNCTION
TB402	C	TERMINAL BOARD: nylon base phenolic formica board; incl 2 turret type terminals; 1-1/4 in. lg by 19/32 in. w by 13/32 in. h over-all excluding terminals; marked "R450"; Hazeltine Elec (mfr and contr) part 1587-1080G8.	For R450
TB403	C	TERMINAL BOARD: nylon base phenolic formica board; incl 2 turret type terminals; 1-1/4 in. lg by 19/32 in. w by 13/32 in. h over-all excluding terminals; marked "R445"; Hazeltine Elec (mfr and contr) part 1587-1080G6.	For R445
TB404	C	TERMINAL BOARD: plastic board; incl 8 turret type terminals; 4-1/4 in. lg by 2-1/2 in. w by 1/8 in. thk over-all excluding terminals; c/o 1 Hazeltine Elec part no. 1591-1085P1 board, and 8 Hazeltine Elec part no. 227-1059P2 terminals; marked "A", "R454", "R455", "R456", "R457"; Hazeltine Elec (mfr and contr) part 1591-1085G1.	General purpose
TB405	C	FUSEHOLDER: block type; accommodates 6 cartridge type fuses (3 fuses 3 in. lg by 13/16 in. dia, and 3 fuses 2 in. lg by 9/16 in. dia over-all), w/ferrule terminals; 11 in. lg by 4-1/2 in. w by 1-11/32 in. h over-all; 12 solder lug terminals; incl facilities for 2 spare fuses; Hazeltine Elec (mfr and contr) part 1591-5002G1.	For F412, F413, F414, F415 and 2 spare fuses
TB406	C	TERMINAL BOARD: natural laminated glass cloth base melamine resin plastic board; incl 6 turret type terminals; 4 in. lg by 3 in. w by 1/8 in. thk over-all excluding terminals; Hazeltine Elec (mfr and contr) part 1591-1034G1.	General purpose
V401		ELECTRON TUBE: glass envelope; full-wave high-vacuum rectifier; Spec MIL-E-1C; MIL type 5R4WGB; Hazeltine Elec (contr) part 5R4WGB.	Rectifier
V402		Same as V401.	Rectifier
V403		Same as V401.	Rectifier
V404		Same as V401.	Rectifier
V405		Same as V401.	Rectifier
V406		Same as V401.	Rectifier
V407		ELECTRON TUBE: glass envelope; high current low mu double triode; Spec MIL-E-1C; MIL type 6080WA; Hazeltine Elec (contr) part 6080WA.	Series control
V408		Same as V407.	Series control
V409		Same as V407.	Series control
V410		ELECTRON TUBE: glass envelope; sharp cutoff rf pentode; Spec MIL-E-1C; MIL type 6AH6; Hazeltine Elec (contr) part 6AH6.	Control amplifier
V411		ELECTRON TUBE: glass envelope; voltage regulator; Spec MIL-E-1C; MIL type OA2WA; Hazeltine Elec (contr) part OA2WA.	Voltage regulator

TABLE 8-3. MAINTENANCE PARTS LIST — Cont'd.

REF. DESIG.	NOTES	NAME AND DESCRIPTION	LOCATING FUNCTION
V412		Same as V411.	Voltage regulator
V413		Same as V411.	Voltage regulator
V414		ELECTRON TUBE: glass envelope; beam power amplifier; Spec MIL-E-1C; MIL type 6Y6G; Hazeltine Elec (contr) part 6Y6G.	Series control
V415		Same as V414.	Series control
V416		Same as V414.	Series control
V417		Same as V410.	Series control
V418		Not used.	
XF401		FUSEHOLDER: extractor post type; for 13/32 in. lg by 1/2 in. fuse; black phenolic body w/screw cap; 250 v at 15 amp; 2-1/4 in. lg by 1.775 in. h by 1.200 in. w; panel hole mounting in 7/8 in. dia hole; 2 mounting holes 0.171 in. dia spaced 1.312 in. c to c; 2 tinned solder lug terminals, one on end, one on side; fungus-proof; resistant to salt water spray, waterproof; cap marked "FUSE" also with arrow in white-filled letters; Bussmann (mfr) type HPC-J; Hazeltine Elec (contr) part 343-1034P1.	For F401
XF402		Same as XF401.	For F402
XF403		Same as XF401.	For F403
XF404		Same as XF401.	For F404
XF405		Same as XF401.	For F405
XF406		Same as XF401.	For F406
XF407		Same as XF401.	For F407
XF408		Same as XF401.	For F408
XF409		Same as XF401.	For F409
XF410		Same as XF401.	For F410
XF411		Same as XF401.	For F411
XF412		Same as XF401.	For F412
XF413		Same as XF401.	For F413
XF414		Same as XF401.	For F414
XF415		Same as XF401.	For F415
XF416		Same as XF401.	For F416
XF417		FUSEHOLDER: extractor post type; for 3AG type fuses; black phenolic body and knob; 15 amp max current capacity at 250 v; 2-9/64 in. lg by 11/16 in. dia; 1/2 in.-24 thd body for panel hole mtg; 2 solder lug terminals; furnished w/nut and neoprene washer; Bussmann Mfg Co (mfr) type HKP-HW-MOD; Hazeltine Elec (contr) part/dwg FU-10010.	Holder for F417

TABLE 8-3. MAINTENANCE PARTS LIST — Cont'd.

REF. DESIG.	NOTES	NAME AND DESCRIPTION	LOCATING FUNCTION
XI401		LIGHT, INDICATOR: supplied w/o lens, accommodates lens 5/8 in. dia w/screw type mtg; for 1 lamp; miniature bayonet base; T-3-1/4 bulb, lamp not incl; rated 125 v at 75 w; approx 1-19/32 in. lg by 15/16 in. dia over-all; lamp replaceable from front of panel; Dial Light Corp (mfr) part 91408; Hazeltine Elec (contr) part 281-1017P1.	Holder for I401
XI402		Same as XI401.	Holder for I402
XI403		Same as XI401.	Holder for I403
XI404		Same as XI401.	Holder for I404
XI405		Same as XI401.	Holder for I405
XI406		Same as XI401.	Holder for I406
XI407		Same as XI401.	Holder for I407
XI408		Same as XI401.	Holder for I408
XI409		Same as XI401.	Holder for I409
XI410		Same as XI401.	Holder for I410
XI411		Same as XI401.	Holder for I411
XI412		Same as XI401.	Holder for I412
XI413		Same as XI401.	Holder for I413
XI414		Same as XI401.	Holder for I414
XI415		Same as XI401.	Holder for I415
XI416		Same as XI401.	Holder for I416
XI417		LAMPHOLDER: candleabra bayonet base; double brass contact; brass nickel plated shell; molded phenolic insulation; 1-13/16 in. lg by 1-3/16 in. w by 1-31/64 in. h over-all; 2 mtg holes 5/32 in. dia on 1-1/4 in. mtg centers; Culver-Stearns Mfg Co (mfr) part GA14A modified; Hazeltine Elec (contr) part 281-1015P1; (same as XI151).	Holder for I417
XV401	B	SOCKET, ELECTRON TUBE: octal contact configuration; no contacts missing; molded plastic body; requires rd shaped plain body accommodation hole to clear 1-7/64 in. dia body; two 0.156 in. dia mtg holes in metal saddle spaced 1-1/2 in. c to c; provisions for mtg electron tube shield not provided; electron tube retaining device not incl; Spec JAN-S-28A; JAN type TS101P01; Hazeltine Elec (contr) part TS101P01.	Socket for V401
XV402		Same as XV401.	Socket for V402
XV403		Same as XV401.	Socket for V403
XV404		Same as XV401.	Socket for V404
XV405		Same as XV401.	Socket for V405

TABLE 8-3. MAINTENANCE PARTS LIST – Cont'd.

REF. DESIG.	NOTES	NAME AND DESCRIPTION	LOCATING FUNCTION
XV406		Same as XV401.	Socket for V406
XV407		Same as XV401.	Socket for V407
XV408		Same as XV401.	Socket for V408
XV409		Same as XV401.	Socket for V409
XV410	B	SOCKET, ELECTRON TUBE: miniature; 7 pin contact configuration; no contacts missing; molded low loss composition body; requires rd shaped plain body accommodation hole to clear 0.625 in. max dia body; two 1/8 in. dia mtg holes spaced 7/8 in. c to c; provision for mtg bayonet type electron tube shield provided; electron tube retaining device not incl; Spec JAN-S-28A; JAN type TS102P01; Hazeltine Elec (contr) part TS102P01; (same as XV106).	Socket for V410, V411, V412, V413 and V417
XV411		Same as XV410.	Socket for V411
XV412		Same as XV410.	Socket for V412
XV413		Same as XV410.	Socket for V413
XV414		Same as XV410.	Socket for V414
XV415		Same as XV410.	Socket for V415
XV416		Same as XV410.	Socket for V416
XV417		Same as XV410.	Socket for V417

TABLE 8-3. MAINTENANCE PARTS LIST — Cont'd.

REF. DESIG.	NOTES	NAME AND DESCRIPTION	LOCATING FUNCTION
601-699 1601-1699 2601-2699 Series	E	AZIMUTH-RANGE INDICATOR: Army-Navy Azimuth, Range Indicator IP-141A/TPS-1D; Hazeltine Elec (mfr and contr) part/dwg A-18925; Navy Spec MIL-R-0015895(SHIPS) and Amendment 2.	
A601	F	PLATE, MOUNTING, SYNCHRO: aluminum alloy; 3-3/8 in. lg by 3-3/8 in. w by 5/16 in. thk over-all; four 0.221 in. dia mtg holes on 2-3/4 in. by 2-3/4 in. mtg centers; 2-7/8 in. dia cutout in center of plate; Hazeltine Elec (mfr and contr) part 1593-1071P1.	For B602
A602	F	COVER, COIL: 6-11/32 in. lg by 1-5/16 in. w by 2-5/16 in. h over-all; four 0.144 in. dia mtg holes on 6-1/16 in. by 1-11/16 in. mtg centers; Hazeltine Elec (mfr and contr) part 1593-1079P1.	For A614
A603	F	PLATE, MOUNTING: aluminum Navy spec 47A11; condition 1/4 hard; rectangular shape; 6-3/16 in. lg by 4-1/4 in. w by 0.122 in. thk; five 0.221 in. dia mtg holes irregularly spaced; 1 hole 1-7/8 in. dia; six no. 8-32 NC-2 tapped holes equally spaced on 3-3/8 in. dia circle; Hazeltine Elec (mfr and contr) part 1593-1018P1.	For H604
A604	C	BUMPER, RUBBER: gum rubber; special bumper; 2-3/8 in. od by 1-3/8 in. id by 3/32 in. thk; 30 to 40 durometer hardness rating; Hazeltine Elec (mfr and contr) part 1593-1016P1.	For CR tube V609
A605	F	BRACKET, MOUNTING, RESISTOR: cold rolled steel, cadmium plated; "L" shape; 1-11/16 in. lg by 3/4 in. w by 0.731 in. h over-all; Hazeltine Elec (mfr and contr) part 217-1022P2; (same as A410).	Mounting for R663 and R664
A606	F	BRACKET, MOUNTING, SWITCH: aluminum, Navy spec 47A11, condition 1/4 hard; "U" shaped; 1-9/16 in. lg by 3/8 in. w by 5/16 in. h over-all; two 0.169 in. dia mtg holes spaced 1-3/16 in. c to c; 1 hole 5/32 in. dia located in center; Hazeltine Elec (mfr and contr) part 1592-1079P1; (same as A112).	Bracket for S601 and S611
A607	C	ROD, SPRING: stainless steel; 4-1/2 in. lg by 3/8 in. w over-all; one end tapered 3-1/2 in. lg to 13/32 in. dia; 0.196 in. dia mtg hole located 1/4 in. from other end; Hazeltine Elec (mfr and contr) part 1593-1097P1.	For XV625
A608		RETAINER, CAPACITOR: spade type; 2-1/2 in. lg by 29/32 in. w by 0.045 in. thk; no. 10-32 NF-2 by 5/8 in. lg integral threaded stud; Spec MIL-C-25A, MIL type CP07SB1; Hazeltine Elec (contr) part 217-1001P7.	For C661
A609		RETAINER, CAPACITOR: spade type; 2-1/4 in. lg by 25/32 in. w by 0.045 in. thk; no. 10-32 NF-2 by 5/8 in. lg integral threaded stud; Spec MIL-C-25A, MIL type CP07SA2; Hazeltine Elec (contr) part 217-1001P2.	For C623
A610	F	BRACKET, MOUNTING, SWITCH: 1/4 hard aluminum, alodine finish; "U" shape, 3 in. lg by 2-1/2 in. w by 0.622 in. h over-all; Hazeltine Elec (mfr and contr) part 1593-1096P1.	Mounts S609
A611		PANEL, WARNING: plastic; rectangular shape; 8-19/32 in. lg by 7-1/2 in. w by 1/8 in. thk over-all; four 0.169 in. dia mtg holes on 7-5/8 in. by 3-13/16 in. mtg centers; marked "Caution 7 KV"; Hazeltine Elec (mfr and contr) part IM-1300.	High voltage warning plate

TABLE 8-3. MAINTENANCE PARTS LIST — Cont'd.

REF. DESIG.	NOTES	NAME AND DESCRIPTION	LOCATING FUNCTION
A612	C	RETAINER, CAPACITOR: aluminum; alodine finish; "U" shaped; 4-3/8 in. lg by 1-3/4 in. w by 2-5/16 in. h over-all; four 0.169 in. dia mtg holes on 3-7/8 in. by 1-1/8 in. mtg centers; two 0.196 in. dia holes spaced 1-11/16 in. c to c located on top; Hazeltine Elec (mfr and contr) part 1593-1159P1.	For C666
A613	C	CASE, COIL: aluminum alloy; 3-7/8 in. dia by 2-1/2 in. h excluding mtg ears; incloses 1 Hazeltine Elec Tube Focusing Coil, part 375-1126G1; Hazeltine Elec (mfr and contr) part 1593-1089G1.	For L602
A614		Not used.	
A615		ADAPTER, MOUNTING, SWITCH: brass, nickel plated; irregular shape, approx 1-9/16 in. lg by 13/16 in. w by 1-15/16 in. deep over-all; bushing 3/8-32 NEF-2 by 3/8 in. lg; Hazeltine Elec (mfr and contr) part/dwg 228-1050P2.	Rotary control adapter and mounting for S607
A616		CUSHION, ELECTRON TUBE: black neoprene; rd shape, 3/4 in. od by 5/16 in. id by 7/16 in. h over-all; conical tip 7/16 in. max dia on one side; Hazeltine Elec (mfr and contr) part/dwg 359-1016P1.	For V625
A617		RETAINER, CAPACITOR: spade type; 4-3/4 in. lg by 29/32 in. w by 0.045 in. thk; no. 10-32 NF-2 by 5/8 in. lg integral threaded stud; Spec MIL-C-25A, MIL type CP07SB6; Hazeltine Elec (contr) part 217-1001P12.	For C662
A618		ADAPTER, MOUNTING, SWITCH: brass, nickel plated; irregular shape, approx 1-9/16 in. lg by 13/16 in. w by 1-15/16 in. deep over-all; bushing 3/8-32 NEF-2 by 3/8 in. lg; Hazeltine Elec (mfr and contr) part/dwg 228-1050P1.	Rotary control adapter for S613 and S614
A619		ADAPTER, SWITCH ACTUATOR: plunger type actuation; adjustable; dim., 2-29/32 in. lg, 1-9/16 in. w by 3/4 in. h by 7/8 in. lg from shaft end to mtg surface, two mtg holes for no. 6 size screw spaced 1-1/4 in. c to c; accommodates 2 toggle switches mounted 1 in. apart; Hazeltine Elec (mfr and contr) part 228-1084P1.	Rotary control adapter for S608
A620	C	COVER, ELECTRICAL EQUIPMENT CABINET: aluminum, anodized, USMC green; rectangular shape, approx 28-1/2 in. lg by 24 in. w by 1-1/4 in. deep over-all; 26 mtg holes tapped 1/4 in.-20, 2 mtg holes 0.386 in. dia symmetrically spaced around edges; Hazeltine Elec (mfr and contr) part 1620-1011G1; (same as A116).	Cover for outer case
A621	C	GUIDE, MOUNTING BASE: stainless steel, passivated finish; rectangular shape; c/o 2 channels, block and plate; approx 21-11/16 in. lg by 3-31/32 in. w by 1-23/32 in. h over-all; two 7/16 in. dia mtg holes spaced 15-1/4 in. c to c; Hazeltine Elec (mfr and contr) part/dwg 1593-1010G1.	Mounting for A624
A622	C	GUIDE, MOUNTING BASE: stainless steel, passivated finish; rectangular shape; c/o 2 channels, block and plate; approx 21-11/16 in. lg by 3-31/32 in. w by 1-23/32 in. h over-all; two 7/16 in. dia mtg holes spaced 15-1/4 in. c to c; Hazeltine Elec (mfr and contr) part/dwg 1593-1010G2.	Mounting for A624
A623	C	CABINET, ELECTRICAL EQUIPMENT: aluminum; 24-1/4 in. lg by 24 in. w by 32 in. h over-all; incl several channels and lg tubes of aluminum soldered to sides; incl four flush folding type handles located 2 ea side and pressure relief valve; Hazeltine Elec (mfr and contr) part A-18869G4.	Unit outer case

TABLE 8-3. MAINTENANCE PARTS LIST—Cont'd.

REF. DESIG.	NOTES	NAME AND DESCRIPTION	LOCATING FUNCTION
A624	C	CASE, INDICATOR: aluminum, USMC green; approx 24-5/8 in. lg by 21-9/16 in. w by 20-1/4 in. deep over-all; incl 12 hat channels; encloses 1 AN, Azimuth-Range Indicator, type IP-141A/TPS-1D; Hazeltine Elec (mfr and contr) part 1593-1001G2.	Unit inner case
A625		Not used.	
A626	C	BLOCK, BRUSH MOUNTING: moulded phenolic or laminated nylon; 1-3/4 in. lg by 3/4 in. w by 3/8 in. h over-all; six 0.144 in. dia holes, two holes spaced on 5/16 in. by 9/32 in. mtg centers one end, four holes spaced on 5/16 in. by 3/8 in. mtg centers other end; Hazeltine Elec (mfr and contr) part 1593-1080P1.	For E618
A627	C	HANDLE, PANEL: "U" shape; stainless steel; passivating dip; 3/8 in. dia, 1-1/8 in. inside height of bail; both ends thd w/5/16-18 NC-2 thd, 13/16 in. lg of thd portion; designed for mtg holes spaced 4-1/8 in. c to c; Hazeltine Elec (mfr and contr) part HA-1061.	For indicator panel
B601		MOTOR, ALTERNATING CURRENT: capacitor start induction type; 115 v ac, 400 cycles, single phase, 0.65 nom amp; 1/50 hp, 7000 rpm; double flatted shaft; reversible rotation; -54 deg to +65 deg C ambient temp; continuous fan duty; 2-25/32 in. lg, excluding shaft, 1-3/4 in. dia, 1/4 in. dia shaft, shaft extends 11/16 in. from frame; Eastern Air Devices, Inc (mfr) part J33D modified; Hazeltine Elec (contr) part/dwg 315-1034P2; (p/o B601); (same as B401B).	Motor for blower B601
B601A		PROPELLER: aluminum finish per Eastern Devices Spec PS10; 4 in. circle dia by 27/64 in. deep excluding hub; through axial mtg hole 1/4 in. dia and two no. 10-32 NF tapped holes spaced 90 deg apart in hub; 4 blades; Eastern Air Devices, Inc (mfr) part 2234-4C-2; Hazeltine Elec (contr) part/dwg 315-1034P3; (p/o B601); (same as B401A).	Fan for blower B601
B602		SYNCHRO, RECEIVER: 115 v, 400 cycles, single phase; 1/4 in. dia shaft, 4/5 in. lg from housing, slotted shaft end; body 3.100 in. dia by 4.600 in. lg over-all; Spec MIL-S-16892, MIL type 31TR4C; Hazeltine Elec (contr) part/dwg 315-1040P5.	Synchro motor drives deflection coil
C601	B	CAPACITOR, FIXED, PAPER DIELECTRIC: 600 v dc working, 2 μf, ±10%, 2.4 μf to 1.8 μf capacity range; style no. 3-A, metal case, uninsulated, hermetically sealed, case 2 in. deep by 1-1/8 in. h by 2 in. w; schematic diagram no. 1-R, Spec MIL-C-25A, MIL type CP53B1EF205K; Hazeltine Elec (contr) part/dwg 235-1002P29; (same as C156).	Filter for 300 volt supply
C602	B	CAPACITOR, FIXED, PAPER DIELECTRIC: 600 v dc working, 1 μf, ±10%, 900,000 μμf to 1.2 μf capacity range; style no. 3-A, metal case, uninsulated, hermetically sealed, case 1-3/4 in. deep by 2-3/4 in. h by 1 in. w; schematic diagram no. 1-R; Spec MIL-C-25A, MIL type CP53B1EF105V; Hazeltine Elec (contr) part/dwg 235-1002P25; (same as C402).	Filter for 450 volt supply
C603	B	CAPACITOR, FIXED, MICA DIELECTRIC: 500 v dc working, 1000 μμf, ±10%; style no. 8-B, plastic case, 51/64 in. w by 51/64 in. h by 5/16 in. deep; schematic diagram no. 1-R; Spec MIL-C-5A, MIL type CM35B102K; Hazeltine Elec (contr) part/dwg 235-1008P18; (same as C540).	Bypass for tuning meter

TABLE 8-3. MAINTENANCE PARTS LIST — Cont'd.

REF. DESIG.	NOTES	NAME AND DESCRIPTION	LOCATING FUNCTION
C604		Same as C603.	Input coupling for V601
C605		CAPACITOR, FIXED, PAPER DIELECTRIC: 600 v dc working, 100,000-100,000 μμf, +20% -10%, 120,000 μμf to 90,000 μμf capacity range; style no. 3-A; metal case, uninsulated, hermetically sealed case 1 in. deep by 3/4 in. h by 1-13/16 in. w; schematic diagram 8-R; Spec MIL-C-25A, MIL type CP53B4EF104V; Hazeltine Elec (contr) part/dwg 235-1002P9; (same as C101).	Consists of C605A and C605B
C605A		Part of C605; for reference only.	Screen by-pass for V601
C605B		Part of C605; for reference only.	Screen by-pass for V602
C606	B	CAPACITOR, FIXED, PAPER DIELECTRIC: 600 v dc working, 100,000 μμf, ±20%, 120,000 μμf to 80,000 μμf capacity range; style no. 25-K; metal case, insulated, plastic, hermetically sealed; 11/16 in. lg by 11/16 in. dia; schematic diagram no. 1-R; Spec MIL-C-25A; MIL type CP26A1EF104M; Hazeltine Elec (contr) part/dwg 235-1123P4; (same as C3305).	Video coupling to V609
C607		Same as C606.	Video coupling to V602
C608		Not used.	
C609		Same as C603.	Trigger coupling to V603B
C610		CAPACITOR, FIXED, MICA DIELECTRIC: 500 v dc working, 360 μμf, ±2%; -100 to +100 parts per million per deg C temp coef; style no. 8-B; plastic case, case 47/64 in. w by 7/16 in. h by 3/16 in. deep; schematic diagram no. 1-R; Spec MIL-C-5A, MIL type CM20D361G; Hazeltine Elec (contr) part/dwg 235-1005P71.	PPI gate timing for V603
C611		Same as C610.	PPI gate timing for V603
C612	B	CAPACITOR, FIXED, MICA DIELECTRIC: 500 v dc working, 680 μμf, ±2%; -20 to +100 parts per million per deg C temp coef; style no. 8-B; plastic case, 51/64 in. w by 51/64 in. h by 5/16 in. deep; schematic diagram no. 1-R; Spec MIL-C-5A, MIL type CM35E681G; Hazeltine Elec (contr) part/dwg 235-1116P12.	PPI gate timing for V603
C613	B	CAPACITOR, FIXED, MICA DIELECTRIC: 500 v dc working, 1300 μμf, ±2%; -20 to +100 parts per million per deg C temp coef; style no. 8-B; plastic case, 51/64 in. w by 51/64 in. h by 5/16 in. deep; schematic diagram no. 1-R; Spec MIL-C-5A, MIL type CM35E132G; Hazeltine Elec (contr) part/dwg 235-1116P11.	PPI gate timing for V603
C614		Same as C603.	Gate coupling to V605
C615		CAPACITOR, FIXED, MICA DIELECTRIC: 500 v dc working, 3900 μμf, ±2%; -20 to +100 parts per million per deg C temp coef; style no. 8-B; plastic case, 51/64 in. w by 51/64 in. h by 5/16 in. deep; schematic diagram no. 1-R; Spec MIL-C-5A, MIL type CM35E392G; Hazeltine Elec (contr) part/dwg 235-1116P6.	PPI sweep timing

TABLE 8-3. MAINTENANCE PARTS LIST — Cont'd.

REF. DESIG.	NOTES	NAME AND DESCRIPTION	LOCATING FUNCTION
C616		CAPACITOR, FIXED, MICA DIELECTRIC: 500 v dc working, 2000 μμf, ±2%; -20 to +100 parts per million per deg C temp coef; style no. 8-B; plastic case, 51/64 in. w by 51/64 in. h by 5/16 in. deep; schematic diagram no. 1-R; Spec MIL-C-5A, MIL type CM35E202G; Hazeltine Elec (contr) part/dwg 235-1116P4.	PPI sweep timing
C617	B	CAPACITOR, FIXED, MICA DIELECTRIC: 500 v dc working, 1000 μμf, ±2%; -20 to +100 parts per million per deg C temp coef; style no. 8-B; plastic case, 51/64 in. w by 51/64 in. h by 5/16 in. deep; schematic diagram no. 1-R; Spec MIL-C-5A, MIL type CM35E102G; Hazeltine Elec (contr) part/dwg 235-1116P2.	PPI sweep timing
C618		Same as C617.	PPI sweep timing
C619		Same as C605.	Consists of C619A and C619B
C619A	E	Part of C619; for reference only.	Decoupling for V606B
C619B	E	Part of C619; for reference only.	Bypass for intensity control
C620		Same as C606.	Sweep coupling to V608
C621	B	CAPACITOR, FIXED, MICA DIELECTRIC: 500 v dc working, 2200 μμf, ±10%; style no. 8-B; plastic case, 51/64 in. w by 51/64 in. h by 5/16 in. deep; schematic diagram no. 1-R; Spec MIL-C-5A, MIL type CM35B222K; Hazeltine Elec (contr) part/dwg 235-1008P38.	Sweep coupling for V606B
C622		CAPACITOR, FIXED, MICA DIELECTRIC: 500 v dc working, 62 μμf, ±5%; -200 to +200 parts per million per deg C temp coef; style no. 8-B, plastic case, 47/64 in. w by 7/16 in. h by 3/16 in. deep; schematic diagram no. 1-R; Spec MIL-C-5A, MIL type CM20C620J; Hazeltine Elec (contr) part/dwg 235-1005P27.	Gate sharpening to V609
C623		CAPACITOR, FIXED, PAPER DIELECTRIC: 1000 v dc working, 500,000 μμf, ±10%, 500,000 μμf to 450,000 μμf capacity range; style no. 3-D; metal case, uninsulated, hermetically sealed, 1-1/16 in. deep by 2-1/4 in. h by 1-13/16 in. w, 13/16 in. terminal centers, 1-3/8 in. h; schematic diagram no. 1-R; Spec MIL-C-25A, MIL type CP70E1EG504K; Hazeltine Elec (contr) part/dwg 235-1040P3.	1st anode bypass, V609
C624		Same as C606.	Video coupling to V612A
C625	B	CAPACITOR, FIXED, MICA DIELECTRIC: 500 v dc working, 8200 μμf, ±10%; style no. 8-B; plastic case, 51/64 in. w by 51/64 in. h by 5/16 in. deep; schematic diagram no. 1-R; Spec MIL-C-5A, MIL type CM35B822K; Hazeltine Elec (contr) part/dwg 235-1008P74.	Strobe coupling to V601
C626		Same as C603.	Bias bypass for V613B
C627		Same as C603.	Bypass for tuning meter

TABLE 8-3. MAINTENANCE PARTS LIST — Cont'd.

REF. DESIG.	NOTES	NAME AND DESCRIPTION	LOCATING FUNCTION
C628		CAPACITOR, FIXED, MICA DIELECTRIC: 500 v dc working, 2700 μμf, ±2%; -100 to +200 parts per million per deg C temp coef; plastic case, 51/64 in. w by 51/64 in. h by 5/16 in. deep; Spec MIL-C-5A, MIL type CM30D272G; Hazeltine Elec (contr) part/dwg 235-1008P41.	Marker gate timing, V614
C629	B	CAPACITOR, FIXED, PAPER DIELECTRIC: 600 v dc working, 50,000 μμf, ±20%, 60,000 μμf to 45,000 μμf capacity range; metal case, insulated, plastic, hermetically sealed; 1-11/16 in. lg by 11/16 in. dia; Spec MIL-C-25A, MIL type CP26A1EF503M; Hazeltine Elec (contr) part/dwg 235-1123P3.	Marker gate coupling to V615A
C630		CAPACITOR, FIXED, PAPER DIELECTRIC: 600 v dc working, 1.0-1.0 μf, +20% -10%, 1.2 μf to 900,000 μμf capacity range; metal case, uninsulated, hermetically sealed, 2 in. deep by 1-1/8 in. h by 2 in. w; Spec MIL-C-25A, MIL type CP53B4EF105V; Hazeltine Elec (contr) part/dwg 235-1002P27; (same as C507; incl C630A and 630B).	B+ decoupling for marker circuits
C631	B	CAPACITOR, FIXED, PAPER DIELECTRIC: 600 v dc working, 50,000 μμf, ±10%, 60,000 μμf to 45,000 μμf capacity range; metal case, uninsulated, hermetically sealed, 1 in. deep by 3/4 in. h by 1-13/16 in. w; Spec MIL-C-25A, MIL type CP53B1EF503K; Hazeltine Elec (contr) part/dwg 235-1002P1.	Cathode bypass for V615A
C632	B	CAPACITOR, FIXED, MICA DIELECTRIC: 500 v dc working, 330 μμf, ±10%; plastic case, 47/64 in. w by 7/16 in. h by 3/16 in. deep; Spec MIL-C-5A, MIL type CM20B331K; Hazeltine Elec (contr) part/dwg 235-1005P70.	Cathode bypass for V616A and V616B
C633		Same as C632.	Coupling to V616B
C634		Same as C625.	PPI marker coupling
C635		Same as C603.	Bias bypass for V617A
C636		Same as C625.	Cathode bypass for V617B
C637		Same as C621.	Bias bypass for V618B
C638		Same as C625.	PPI marker coupling
C639		Same as C606.	Video coupling to V619A
C640		Same as C606.	Video coupling to V612B
C641		Same as C603.	Cathode bypass for V612B
C642		Same as C601.	B+ decoupling for V619B and V612B
C643		Same as C603.	Trigger coupling to V621A
C630A		Part of C630; for reference only.	B+ decoupling for V611
C630B		Part of C630; for reference only.	B+ decoupling for marker circuits

TABLE 8-3. MAINTENANCE PARTS LIST — Cont'd.

REF. DESIG.	NOTES	NAME AND DESCRIPTION	LOCATING FUNCTION
C631	B	CAPACITOR, FIXED, PAPER DIELECTRIC: 600 vdc working, 50,000 μμf ±10%; 60,000 μμf to 45,000 μμf capacity range; metal case, uninsulated, hermetically sealed, 1 in. deep by 3/4 in. h by 1-13/16 in. w; Spec MIL-C-25A, MIL type CP53B1EF503K; Hazeltine Elec (contr) part 235-1002P1.	Cathode bypass for V615A
C632	B	CAPACITOR, FIXED, MICA DIELECTRIC: 500 vdc working, 330 μμf ±10%; plastic case, 47/64 in. w by 7/16 in. h by 3/16 in. deep; Spec MIL-C-5A, MIL type CM20B331K; Hazeltine Elec (contr) part 235-1005P70; (same as C1363).	Cathode bypass for V616A and V616B
C633		Same as C632.	Coupling to V616B
C634		Same as C625.	PPI marker coupling
C635		Same as C603.	Bias bypass for V617A
C636		Same as C625.	Cathode bypass for V617B
C637		Same as C621.	Bias bypass for V618B
C638		Same as C625.	PPI marker coupling
C639		Same as C606.	Video coupling to V619A
C640		Same as C606.	Video coupling to V612B
C641		Same as C603.	Cathode bypass for V612B
C642		Same as C601.	B+ decoupling for V619B and V612B
C643		Same as C603.	Trigger coupling to V621A

TABLE 8-3. MAINTENANCE PARTS LIST — Cont'd.

REF. DESIG.	NOTES	NAME AND DESCRIPTION	LOCATING FUNCTION
C644	B	CAPACITOR, FIXED, PAPER DIELECTRIC: 600 v dc working; 500,000 μf, ±10%, 0.45 μf to 0.60 μf capacity range; metal case; uninsulated; hermetically sealed; case 1 in. deep by 1 in. h by 1-13/16 in. w; Spec MIL-C-25A, MIL type CP53B1EF504K; Hazeltine Elec (contr) part 235-1002P19; (same as C534).	B+ decoupling for V621
C645		CAPACITOR, FIXED, MICA DIELECTRIC: 1800 μμf, ±10%; 500 v dc working; Spec MIL-C-5A, MIL type CM30B182K; Hazeltine Elec (contr) part CM30B182K.	Strobe delay multivibrator timing
C646	B	CAPACITOR, FIXED, MICA DIELECTRIC: 220 μμf, ±10%; plastic case, 47/64 in. w by 7/16 in. h by 3/16 in. deep; Spec MIL-C-5A, MIL type CM20B221K; Hazeltine Elec (contr) part/dwg 235-1005P60.	Delay trigger coupling to V613A
C647		Same as C603.	Trigger coupling to V622A
C648		CAPACITOR, FIXED, MICA DIELECTRIC: 500 v dc working; 220 μμf, ±2%; -100 to +100 parts per million per deg C temp coef; plastic case, 47/64 in. w by 7/16 in. h by 3/16 in. deep; Spec MIL-C-5A, MIL type CM20D221G; Hazeltine Elec (contr) part 235-1005P58.	"A" gate multivibrator timing
C649		Same as C610.	"A" gate multivibrator timing
C650		Same as C610.	"A" gate multivibrator timing
C651		Same as C612.	"A" gate multivibrator timing
C652		Same as C613.	"A" gate multivibrator timing
C653		Same as C603.	"A" gate coupling to V623
C654		CAPACITOR, FIXED, MICA DIELECTRIC: 300 v dc working; 8200 μμf, ±2%; -20 to +100 parts per million per deg C temp coef; plastic case, 51/64 in. w by 51/64 in. h by 5/16 in. deep; Spec MIL-C-5A, MIL type CM35E822G; Hazeltine Elec (contr) part 235-1116P8.	"A" sweep timing
C655		Same as C615.	"A" sweep timing
C656		Same as C616.	"A" sweep timing
C657		Same as C616.	"A" sweep timing
C658		Same as C617.	"A" sweep timing
C659		CAPACITOR, VARIABLE, CERAMIC DIELECTRIC: rotary type; 1.5 μμf min, 7 μμf max; 500 v dc working; 27/32 in. deep by 13/32 in. h by 41/64 in. w; Spec JAN-C-81, JAN type CV11A070; Hazeltine Elec (contr) part 235-1014P4.	Deflection balancing adjustable
C660	B	CAPACITOR, FIXED, CERAMIC DIELECTRIC: 500 v dc working; 5 μμf, ±0.5 μμf; 750 μμf per μf per deg C neg temp coef, +250 μμf per μf per deg C tolerance; uninsulated body; 0.400 in. max lg by 0.200 in. max dia; Spec JAN-C-20A, JAN type CC20UK050D; Hazeltine Elec (contr) part/dwg 235-1199P24.	Deflection balancing fixed

TABLE 8-3. MAINTENANCE PARTS LIST — Cont'd.

REF. DESIG.	NOTES	NAME AND DESCRIPTION	LOCATING FUNCTION
C661		CAPACITOR, FIXED, PAPER DIELECTRIC: 2000 v dc working, 100,000 μμf, ±10%, 110,000 μμf to 90,000 μμf capacity range; uninsulated; hermetically sealed; metal case; 1-3/16 in. deep by 2-1/2 in. h by 2-1/2 in. w, 1-1/8 in. terminal centers, terminals 1-3/4 in. h; Spec MIL-C-25A, MIL type CP70E1EJ104K; Hazeltine Elec (contr) part 235-1155P1.	"A" gate coupling to V625
C662		CAPACITOR, FIXED, PAPER DIELECTRIC: 2000 v dc working, 1.0 μf, ±10%, 1.1 μf to 900,000 μμf capacity range; metal case, uninsulated, hermetically sealed, 1-3/16 in. deep by 4-3/4 in. h by 2-1/2 in. w, terminals 1-3/4 in. h; Spec MIL-C-25A, MIL type CP70E1EJ105K; Hazeltine Elec (contr) part/dwg 235-1224P1.	Cathode bypass to V625
C663		Not used.	
C664		Same as C602.	Phase shifting for B601
C665		CAPACITOR, FIXED, PLASTIC DIELECTRIC: 7500 v dc; 60,000 μμf, ±10% tolerance; hermetically sealed glass body; 4-1/4 in. lg by 1-3/8 in. dia; Condenser Products Co (mfr) part ASG-60; Hazeltine Elec (contr) part 235-1047P6.	Filter for +8000 volt power supply
C666		CAPACITOR, FIXED, PLASTIC DIELECTRIC: 3000 v dc; 250,000 μμf, ±10%; case dim. 2 in. lg by 1-3/8 in. dia; Condenser Products Co (mfr) part ASG-254-3MD; Hazeltine Elec (contr) part CO-1542.	Filter for -1500 volt power supply
C667		Same as C665.	Filter for +8000 volt power supply
C668		Same as C665.	Filter for +8000 volt power supply
CR601		SEMI-CONDUCTOR DEVICE, DIODE: germanium type; body 0.300 in. lg max by 0.140 in. dia max; 2 tinned axial wire lead terminals, ea 1 in. lg; Spec MIL-E-1C, MIL type 1N127; Hazeltine Elec (contr) part 1N127.	Clamper for anti-jam network V612A
CR602		Same as CR601.	Line voltage rectifier for M601
DS601		Same as I601.	PPI azimuth range illumination
DS602		Same as I601.	PPI azimuth range illumination
DS603		Same as I601.	PPI azimuth range illumination
DS604		Same as I601.	PPI azimuth range illumination
DS605 thru DS610		Not used.	
DS611		LAMP, INCANDESCENT: single contact; style T-3-1/4; clear; 24 v 0.17 amp; G.E. (mfr) type 1818; Hazeltine Elec (contr) part 277-1001P5.	Radiation ready indicator light
E601		TERMINAL BOARD: mica filled moulded phenolic board; incl 1 screw type terminal; barrier type; 1-3/16 in. lg by 1-1/8 in. w by 1/2 in. h, excluding terminals; H.B. Jones (mfr) part 141-Y-D; Hazeltine Elec (contr) part TS-1541-1.	Terminal board for B601

TABLE 8-3. MAINTENANCE PARTS LIST — Cont'd.

REF. DESIG.	NOTES	NAME AND DESCRIPTION	LOCATING FUNCTION
E602		TERMINAL BOARD: ceramic; 6 stud type terminals incl; 3-13/16 in. lg by 1/2 in. w by 3/4 in. h excluding terminals; two holes for no. 6 screw spaced 3-1/2 in. c to c; Hazeltine Elec (mfr and contr) part 247-1012P5.	For high voltage power supply
E603	C	INSULATOR, BUSHING: nylon base phenolic; 3.075 in. id by 3.175 in. od by 3/16 in. lg; Hazeltine Elec (mfr and contr) part 1593-1028P1.	Part of deflection yoke
E604		LEAD, ELECTRICAL: high voltage transformer lead; c/o Alden Prod Co parts, nylon plate cap one end part 91-1CCSL, other end terminated w/removable shell internal thd 3/8-16 NC-2 shell fitting w/thd insert 3/8-16 NC-2 thd one end, other end internal 10-32 NF-2 tap thru, this end has a 3/64 in. dia hole through wall; 7-1/4 in. lg conductor part APW907-8004-18; Hazeltine Elec (mfr and contr) part/dwg PP-1221.	For T604
E605 and E606		Not used.	
E607	C	INSULATOR, COLLECTOR RING: molded phenolic; 3-3/8 in. od by 2-1/2 in. id by 11/32 in. h over-all; six 0.120 in. dia mtg holes equally spaced on 2.813 in. dia bolt circle; Hazeltine Elec (mfr and contr) part 1593-1036P1.	Part of deflection yoke
E608		KNOB: set screw type; 0.798 in. lg by 0.911 in. max od; black tenite, matte finish; white arrow marking; Navy dwg RE10F651A, Fed Spec QQ-A-351; Raytheon (mfr) catalog 90-1-2G, Hazeltine Elec (contr) part 231-1057G16.	Azimuth control knob
E609		KNOB: set screw type; 1.027 in. lg by 0.911 in. max od; black tenite, matte finish; white arrow marking; Navy dwg RE10F651A, Fed Spec QQ-A-351; Raytheon (mfr) catalog 90-2-2G; Hazeltine Elec (contr) part 231-1057G17; (same as E110).	For R602, R608, R659, R671, R682, R683, R1657, R1693, R1696, R2617 and R2618
E610		Not used.	
E611	A	INSULATOR, PLATE: plastic; 1-1/2 in. lg by 1 in. w by 1/32 in. thk; Hazeltine Elec (mfr and contr) part/dwg 221-1002P1.	Insulator mounting for R2619
E612		TERMINAL, STUD: 27/32 in. lg by 1/4 in. w over-all; hex cross-sectional shape, 1/4 in. across hex flats; Hazeltine Elec (mfr and contr) part/dwg 227-1050P4; (same as E129).	Component connection
E613 thru E616		Not used.	
E617		CONNECTOR, ELECTRON TUBE: silicone shield, brass contact silver plate; Ucinite (mfr) part 118738/C3626A; Hazeltine Elec (contr) part PI-1340.	For V609
E618		BRUSH, ELECTRICAL CONTACT: wedge shape; phosphor bronze, Navy Spec 46B14, grade A; 1-9/16 in. lg by 1/4 in. w by 0.010 in. thk; 60 deg contact angle; flat contact face; spring returns to free dim. when load is applied to contact ends; two 0.144 in. dia mtg holes spaced 5/16 in. c to c; Hazeltine Elec (mfr and contr) part 1593-1081G1.	Wiping contact for L601

TABLE 8-3. MAINTENANCE PARTS LIST — Cont'd.

REF. DESIG.	NOTES	NAME AND DESCRIPTION	LOCATING FUNCTION
E619		Not used.	
E620	C	TERMINAL, STUD: 1-3/64 in. lg by 5/16 in. w over-all; hex cross-sectional shape, 5/16 in. across hex flats; base insulated from conductor connection; 60 v, 4000 rms breakdown voltage; Cambridge Thermionic (mfr) part X1995-D; Hazeltine Elec (contr) part 227-1027P4; (same as E319).	Component connection
E621		INSULATOR, STANDOFF: steatite, grade L-3 or better, white; 1 in. lg by 1/2 in. dia; 1 no. 8-32 by 3/8 in. deep tapped hole ea end; Spec JAN-I-8, JAN type NS3W0208; Hazeltine Elec (contr) part 222-1001P10; (same as E105).	Mounts high voltage components
E622	A	INSULATOR, PLATE: phenolic formica; 3-5/8 in. lg by 1-7/16 in. w by 1/8 in. thk; 2-1/4 in. lg by 1-1/8 in. w aperture in center of plate; Hazeltine Elec (mfr and contr) part 1593-1099P1.	For C661
E623	C	INSULATOR, BUSHING: nylon base phenolic, formica YN-25; 7/16 in. max od reduced to 0.305 in. min od on 0.005 in. radius, 0.221 in. id by 1/8 in. thk over-all; Hazeltine Elec (mfr and contr) part 1593-1098P1.	For C661
E624		Not used.	
E625		SHIELD, ELECTRON TUBE: accommodates RTMA tube envelope style T-5-1/2; vertical joint; straight cylinder shape w/flared end, open top; brass or copper; 1-3/8 in. lg by 0.930 in. dia over-all; mounts on shock shield base; Spec JAN-S-28A, JAN type TS102U01; Hazeltine Elec (contr) part 308-1001P1; (same as E154).	For V604, V607 and V620
E626		SHIELD, ELECTRON TUBE: accommodates RTMA tube envelope style T-6-1/2, vertical joint, straight cylinder shape w/flared end, open top; brass or copper; 1-15/16 in. lg by 1.065 in. dia over-all; mounts on shock shield base; Spec JAN-S-28A, JAN type TS103U02; Hazeltine Elec (contr) part 308-1002P2; (same as E155).	For V603, V606, V612, V614, V615, V616, V617, V618, V619, V621, V622 and V624
E627	A	INSULATOR, PLATE: plastic; 1-1/2 in. lg by 1 in. w by 1/32 in. thk; 1 mtg hole 7/16 in. dia located 1/2 in. from one end on center line; Hazeltine Elec (mfr and contr) part 221-1002P2; (same as E108).	Insulator mounting for R610, R626, R651, R659, R660, R671, R682, R683, R685, R691, R1617, R1618, R1629, R1655, R1657, R1669, R1676, R1687, R1889, R2601 and R2618
E628		Not used.	
E628A	C	TERMINAL BOARD: nylon base phenolic board; incl 72 stud terminals; 15-5/8 in. lg by 3 in. w by 1/8 in. thk, excluding terminals; Hazeltine Elec (mfr and contr) part 1593-1091G1.	Mounting board for 41 resistors, 10 capacitors and 1 RF choke
E629		Not used.	

TABLE 8-3. MAINTENANCE PARTS LIST — Cont'd.

REF. DESIG.	NOTES	NAME AND DESCRIPTION	LOCATING FUNCTION
E629A	C	TERMINAL BOARD: nylon base phenolic board; incl 76 stud terminals; 17-7/8 in. lg by 3 in. w by 1/8 in. thk excluding terminals; Hazeltine Elec (mfr and contr) part 1593-1101G1.	Mounting board for 41 resistors, 8 capacitors, 1 crystal rectifier and 1 RF choke
E630		Not used.	
E630A	C	TERMINAL BOARD: nylon base phenolic board; incl 67 stud terminals; 16-1/2 in. lg by 3 in. w by 1/8 in. thk excluding terminals; Hazeltine Elec (mfr and contr) part 1593-1100G1.	Mounting board for 42 resistors and 9 capacitors
E631		Not used.	
E631A	C	TERMINAL BOARD: nylon base phenolic board; incl 23 stud terminals; 7-15/16 in. lg by 3 in. w by 1/8 in. thk excluding terminals; Hazeltine Elec (mfr and contr) part 1593-1092G1.	Mounting board for 15 resistors and 2 capacitors
E632		Not used.	
E632A	C	TERMINAL BOARD: nylon base phenolic board; incl 13 stud terminals; 5 in. lg by 3 in. w by 1/8 in. thk excluding terminals; Hazeltine Elec (mfr and contr) part 1593-1090G1.	Mounting board for 5 resistors and 2 capacitors
E633		Not used.	
E633A	C	TERMINAL BOARD: nylon base phenolic board; incl 3 stud terminals; 3-3/16 in. lg by 3 in. w by 1/8 in. thk excluding terminals; Hazeltine Elec (mfr and contr) part 1593-1093G1.	Mounting board for R1693, R1694, R1695 and R1696
E634 and E635		Not used.	
E636	C	SHIELD, ELECTRON TUBE: cathode ray tube shield; accommodates 5-1/4 in. max dia envelope; vertical joint; cone shape; open top; 2 openings provided specifically for electrode leads; vented; Allegheny mu-metal; 15-1/8 in. lg by 6-3/8 in. od by 5-9/16 in. id over-all; mounts on panel; Hazeltine Elec (mfr and contr) part A-18661.	For V625
E637	C	SHIELD, ELECTRON TUBE: cathode ray tube shield; accommodates RTMA tube envelope style J84; vertical joint; cone shape; open top; 2 openings provided specifically for electrode leads; vented; Allegheny mu-metal; 10-15/32 in. lg by 12-1/6 in. od by 10-31/32 in. id over-all; mounts on panel; Hazeltine Elec (mfr and contr) part A-18662.	For V609
E638		CLIP, ELECTRICAL: electron tube; for 0.096 in. dia anode connection; brass contact, cadmium plated; 1-13/64 in. lg by 27/64 in. w by 25/64 in. h; rubber insulated; Ucinite Co (mfr) part 118506 w/o wire lead; Hazeltine Elec (contr) part 376-1005P2.	Anode clip for V625
E639		Not used.	
E640	C	PIN, STRAIGHT, HEADED: stainless steel, passivate finish; head 3/8 in. dia by 1/32 in. lg; shank 0.188 in. dia by 0.145 in. lg and 0.125 in. dia by 0.144 in. lg; 0.320 in. lg over-all; panel mounted; hole 0.062 in. dia by 3/32 in. deep in end; Hazeltine Elec (mfr and contr) part 1593-1003P1; (same as E126).	Mounting stud for A620

TABLE 8-3. MAINTENANCE PARTS LIST — Cont'd.

REF. DESIG.	NOTES	NAME AND DESCRIPTION	LOCATING FUNCTION
E641	B	INSULATOR, STANDOFF: steatite, grade L-3 or better; white; 1/2 in. lg by 3/8 in. dia; 1 no. 6-32 by 5/32 in. deep tapped hole ea end; no rated strength; Spec JAN-I-8, JAN type NS3W0104; Hazeltine Elec (contr) part 222-1001P1; (same as E565).	For E635
E642		SHIELD, ELECTRON TUBE: accommodates RTMA tube envelope style T-5-1/2; vertical joint; straight cylinder shape w/flared end; open top; brass or copper; 1-3/4 in. lg by 0.930 in. dia over-all; mounts on shock shield base; Spec JAN-S-28A, JAN type TS102U02; Cinch (mfr) part TS102U02; Hazeltine Elec (contr) part 308-1001P2; (same as E312).	For V601, V602, V605, V611 and V623
E643		INSULATOR, STANDOFF: steatite, grade L-3 or better, white; 1 in. lg by 3/8 in. dia; 1 no. 6-32 by 3/8 in. deep tapped hole ea end; Spec JAN-I-8, JAN type NS3W0108; Hazeltine Elec (contr) part 222-1001P4.	Spacer for TB612
H601		Not used.	
H602	C	WASHER, SPRING TENSION: beryllium copper; 2-15/32 in. hole dia by 2-31/32 in. od by 0.012 in. thk; Hazeltine Elec (mfr and contr) part 1593-1035P1.	Used between gears O610 and O611
H603	C	GROMMET, RUBBER: synthetic rubber, MIL-G-3036; 5/8 in. od of flange, 7/16 in. thk of groove, 1/4 in. dia hole, 3/8 in. over-all height, 1/4 in. w groove; Spec MIL-G-3036, part AN931-C4-7; Hazeltine Elec (contr) part 359-1001P24.	Protection for insulated wires
H604		WASHER, NON-METALLIC: rd shape; neoprene; rd shaped hole, 1-3/4 in. dia; 2-15/16 in. od by 3/32 in. thk; Hazeltine Elec (mfr and contr) part 1593-1222P1.	For V609
H605		Not used.	
H606		WINDOW, CATHODE RAY TUBE: plexiglass; green; rd shape; 5.093 in. dia by 0.125 in. thk over-all; Spec JAN-P-15, type RTP-0-2; Hazeltine Elec (mfr and contr) part 1593-1127P1.	For CR tube V625
H607		CUSHION, ELECTRON TUBE: molded gum rubber, 40-50 durometer; rd shape; 5-11/32 in. od by 5-3/16 in. max id, tapered on 1/2 in. radius to 4-1/2 in. min id by 7/16 in. thk; Hazeltine Elec (mfr and contr) part 1593-1128P1.	For V625
H608		Not used.	
H609		NUT, SLEEVE: open end type; stainless steel; passivating dip; hex head; 5/8 in. across hex flats by 5/16 in. lg; 3/8-32 NEF-2 thd chamfered 45 deg to major dia both ends; 7/16 in. dia shank; 0.219 in. nom lg; Hazeltine Elec (mfr and contr) part 1593-1108P1.	Part of shaft mounting for R602, R608, R2617, R2618 and S601
H610		SCREW, EXTERNALLY RELIEVED BODY: annealed stainless steel, Navy Spec 46S18, Class 7, type A; passivate finish; single chamfer head, slot drive; 0.093 in. h by 0.062 in. w; dim., externally relieved body; 3/16 in. largest bearing surface of head to end of first undercut, 1-3/16 in. largest bearing surface of head to second undercut, 0.255 in. max first dia from head, 0.190 in. max second dia from head; 2-13/32 in. lg over-all; 1/4-20 NC-2, 3/8 in. lg; Hazeltine Elec (mfr and contr) part 1593-1119P1.	Front panel mounting screw
H611 thru H613		Not used.	

TABLE 8-3. MAINTENANCE PARTS LIST — Cont'd.

REF. DESIG.	NOTES	NAME AND DESCRIPTION	LOCATING FUNCTION
H614	F	SCREW, EXTERNALLY RELIEVED BODY: annealed stainless steel, Navy Spec 46S18, Class 7, type A; passivate finish; single chamfer head; slot drive; 3/64 in. h by 3/64 in. w; dim., externally relieved body; 1/8 in. largest bearing surface of head to end of first undercut, 5/8 in. largest bearing surface of head to end of second undercut, 0.190 in. max first dia from head, 1/8 in. second dia from head, 1-3/8 in. lg over-all; no. 10-24 NC-2 thd, 5/16 in. lg; Hazeltine Elec (mfr and contr) part 1593-1113P1.	Mounting screw for calibration control door
H615		LOCK, KNOB: stainless steel, black passivate finish; rd tongue style; c/o 1 base plate, 1 wing type lock and 1 knurled thumbscrew; approx 1-1/8 in. lg by 15/16 in. w by 9/16 in. h over-all; Hazeltine Elec (mfr and contr) part 231-1099G3.	Knob lock for R659, R671, R682, R683, R1657, R1693 and R1696
H616	C	WASHER, SHOULDERED: brass; 0.022 in. thk by 0.437 in. od by 0.173 in. id over-all; 0.258 in. od by 0.156 in. h; Ward Leonard Elec Co (mfr) type 902; Hazeltine Elec (contr) part 236-1081P1; (same as H106).	Centering washer for R633 and R634 mounting
H617	C	HANDLE, PANEL: annealed stainless steel, passivate finish; "U" shape, 5-3/8 in. lg by 2-5/16 in. w by 3/8 in. thk; ea end threaded 5/16-18 NC-2 by 11/16 in. lg; Hazeltine Elec (mfr and contr) part 231-1038P1; (same as H129).	Unit handle
H618		LOCK, KNOB: stainless steel, black passivate finish; rd tongue style; c/o 1 base plate, 1 wing type lock and 1 knurled thumbscrew; approx 1-1/8 in. lg by 15/16 in. w by 9/16 in. h over-all; Hazeltine Elec (mfr and contr) part 231-1099G1; (same as H127).	Knob lock for R602, R608 and R2618
H619 and H620		Not used.	
H621		GROMMET, RUBBER: synthetic rubber, MIL-G-3036; 7/16 in. od of flange, 5/16 in. od of groove, 1/16 in. thk of flange, 3/16 in. dia hole, 3/16 in. over-all h, 1/16 in. w groove; Spec MIL-G-3036, part AN931-3-5; Hazeltine Elec (contr) part 359-1001P1.	Insulated handle of S607 from rotary control
H622		Not used.	
H623	C	WASHER, NON-METALLIC: rd shape; nylon; rd shaped hole, 0.187 in. dia; 1/2 in. od by 0.031 in. thk; Hazeltine Elec (mfr and contr) part 236-1033P2.	Used with ceramic insulator
H624		RETAINER, ELECTRON TUBE: corrosion resistant steel; passivate finish; 2-3/8 in. lg by 2 in. w by 1 in. h over-all when open, 1-3/8 in. id when closed; retains 1-3/8 in. dia tube base; Birtcher (mfr) part 926C-6; Hazeltine Elec (contr) part 308-1010P3.	For V608
H625		GROMMET, RUBBER: synthetic rubber, MIL-G-3036; 13/16 in. od of flange, 9/16 in. od of groove, 1/8 in. thk of flange, 5/16 in. dia hole, 3/8 in. over-all h, 1/8 in. w groove; Spec MIL-G-3036, part AN931A5-9; Hazeltine Elec (contr) part 359-1001P14.	Cable feed-thru
H626		RETAINER, ELECTRON TUBE: nickel silver w/beryllium copper band; dull nickel plated; 1-29/32 in. lg by 1-1/2 in. w by 11/16 in. h by 1-7/32 in. id when closes; retains 1-7/32 in. dia tube base; Hazeltine Elec (mfr and contr) part 308-1006P1; (same as H111).	For V610

TABLE 8-3. MAINTENANCE PARTS LIST — Cont'd.

REF. DESIG.	NOTES	NAME AND DESCRIPTION	LOCATING FUNCTION
H627		SHAFT, LOCK, ELECTRONIC COMPONENT: brass, nickel plated; 1/2 in. lg by 1/2 in. w across hex flats; accommodates 0.257 in. dia shaft; c/o thd bushing and one 3/8-32 NEF-2 thd nut; Hazeltine Elec (mfr and contr) part 231-1002G1; (same as H123).	For R610, R617, R626, R651, R660, R685, R691, R1618, R1629, R1631, R1655, R1669, R1676, R1687, R1689, and R1693
H628		WASHER, FINISHING: annealed stainless steel, passivate finish; rd shape; 3/4 in. od by 9/32 in. id by 1/8 in. h over-all; Hazeltine Elec (mfr and contr) part 362-1018P1; (same as H134).	For H610
H629	C	RETAINER, CAPTIVE SCREW: annealed stainless steel, passivate finish; rd shape; 9/16 in. od by 0.196 in. id by 1/8 in. h over-all; Hazeltine Elec (mfr and contr) part 1593-1111P1.	Retains H614
H630	C	PIN, STRAIGHT, HEADED: stainless steel, passivate finish; c/o clevis pin, ring and 4-1/4 in. lg chain; 1-15/16 in. lg by 9/32 in. dia, excluding ring and chain; Hazeltine Elec (mfr and contr) part 1620-5001G1; (same as H126).	For A620
H631		Not used.	
H632		SCREW, EXTERNALLY RELIEVED BODY: stainless steel; passivate finish; flat head; slot drive; head dim., 3/16 in. h by 1/2 in. dia; externally relieved body, 0.185 in. first dia from head, 0.845 in. largest bearing surface of head to end of first shoulder or undercut, 1-3/8 in. lg; 1/4-20 NC-2 thd by 1/2 in. lg; Hazeltine Elec (mfr and contr) part 209-1008P1; (same as H103).	Mounting screw for A620
H633 and H634		Not used.	
H635		CLAMP, LOOP: nylon; 29/32 in. lg by 3/8 in. h over-all; designed to hold material 3/8 in. max dia; Burndy Engineering Co (mfr) type HP-6N; Hazeltine Elec (contr) part CP-1295-6.	Cable clamp
H636 thru H642		Not used.	
H643	C	HANDLE, CASE: stainless steel, painted USMC green; "C" shape, 6 in. lg by 3-1/2 in. w by 3/8 in. thk over-all; 5-1/4 in. lg grip; Hazeltine Elec (mfr and contr) part 1620-1009P1; (same as H144).	Handle for A623
H644		SCREW, EXTERNALLY RELIEVED BODY: stainless steel, passivated finish; single chamfer head; slot drive; 11/16 in. h by 9/16 in. w; externally relieved body 0.185 in. max first dia from head, 2-1/4 in. lg over-all; 1/4 in.-20 NC-2 thd, 1-11/16 in. lg; Hazeltine Elec (mfr and contr) part 209-1010P1.	For A623 upper mount assembly
H645	C	MOUNTING: c/o 1 ea Hazeltine part 1593-1010G1 lh mount, 1593-1006P1 locking bar, 209-1009P1 captive screw, 2 ea 293-1017P1 drive pins, and assembly hardware; irregular shape; approx 21-11/16 in. lg by 3-31/32 in. w by 1-23/32 in. h excluding locking bar and captive screw assembly; two 7/16 in. dia mtg holes spaced 15-1/4 in. c to c; Hazeltine Elec (mfr and contr) part 1593-5010G1.	Secures azimuth range indicator chassis

TABLE 8-3. MAINTENANCE PARTS LIST — Cont'd.

REF. DESIG.	NOTES	NAME AND DESCRIPTION	LOCATING FUNCTION
H646	C	MOUNTING: c/o 1 ea Hazeltine part 1593-1010G2 rh mount, 1593-1006P1 locking bar, 209-1009P1 captive screw, 2 ea 293-1017P1 drive pins, and assembly hardware; irregular shape; approx 21-11/16 in. lg by 3-31/32 in. w by 1-23/32 in. h excluding locking bar and captive screw assembly; two 7/16 in. dia mtg holes spaced 15-1/4 in. c to c; Hazeltine Elec (mfr and contr) part 1593-5010G2.	Secures azimuth range indicator chassis
H647		Not used.	
H648	F	PIN, STRAIGHT, HEADLESS: annealed stainless steel, Navy Spec 46S18, Class 7, type A; 3 in. over-all, 19/32 in. min dia, 5/8 in. max dia; both ends chamfered, one end 15 deg by 5/16 in. lg, other end 1/32 in. by 1/32 in. lg; both ends drilled, 5/16 in. dia hole on one end, 0.3135 in. max dia hole on other end, both holes spaced 1-1/2 in. c to c; Hazeltine Elec (mfr and contr) part 1620-1003P1; (same as H146).	Connecting pin for A623
H649	F	PIN, STRAIGHT, HEADED: stainless steel; passivate finish; flat head, 3/8 in. dia by 1/16 in. h; shank, 5/16 in. nom dia, 1-1/16 in. nom grip lg, 1/8 in. lg chamfer, 15 deg chamfer, 1-3/16 in. nom lg under head; Hazeltine Elec (mfr and contr) part 1620-1001P1; (same as H147).	Secures H648 to A623
H650 and H651		Not used.	
H652	F	PIN, SHOULDER, HEADLESS: stainless steel, passivate finish; cylindrical shape; 3/8 in. dia by 2-1/16 in. lg over-all; shank 0.249 in. dia by 1-3/32 in. lg w/axial hole 0.185 in. dia by 3/16 in. deep in end; Hazeltine Elec (mfr and contr) part 1620-1004P1; (same as H148).	Locating pin for case cover A620
H653		SCREW, EXTERNALLY RELIEVED BODY: stainless steel, passivate finish; knurled thumb head; slot drive; head dim., 5/8 in. h by 9/16 in. dia; externally relieved body; 0.175 in. first dia from head, 0.845 in. largest bearing surface of head to end of first shoulder or undercut, 5/8 in. lg; 1/4-20 NC-2 thd by 1-23/32 in. lg; Hazeltine Elec (mfr and contr) part 209-1009P1.	Secures azimuth range indicator chassis
H654	F	PIN, GROOVED, HEADLESS: annealed stainless steel, Navy Spec 46S18, Class 7, type A; passivated finish; cylindrical shape w/90 deg straight knurl 40 teeth per in. center; 1-1/4 in. lg by 5/16 in. dia; Hazeltine Elec (mfr and contr) part 293-1017P1.	For H645, H646 and O681
H655	C	BUMPER, RUBBER: synthetic rubber; 9/16 in. dia by 3/8 in. deep over-all, mtg groove 1/4 in. dia by 1/8 in. w; Hazeltine Elec (mfr and contr) part 359-1012P1.	Used between A624 and chassis
H656 and H657		Not used.	
H658	C	NUT, PACKING, HEXAGON: brass and rubber; chamfered; 15/32-32 NS-2 thd; 3/4 in. w across flats, 5/16 in. h over-all; 3/16 in. dia sleeve in center of nut; Hazeltine Elec (mfr and contr) part 1593-1210P1.	For knob H663
H659 thru H661		Not used.	

TABLE 8-3. MAINTENANCE PARTS LIST — Cont'd.

REF. DESIG.	NOTES	NAME AND DESCRIPTION	LOCATING FUNCTION
H662	A	WINDOW, DIAL: plexiglass; clear; 2-25/32 in. dia by 1/16 in. thk over-all; Hazeltine Elec (mfr and contr) part 1593-1190P1.	For indicator dial N604
H663		KNOB: set screw type; 1.255 in. max dia by 0.870 in. max h, excluding crank, 1.379 in. max h over-all; matte finish; black; w/o marking; Hazeltine Elec (mfr and contr) part 231-1095G2.	For N604
H664	C	POINTER, DIAL: aluminum; anodized finish; rotary type motion; tear-drop shape, 31/32 in. lg by 5/16 in. w by 0.017 in. thk over-all; Hazeltine Elec (mfr and contr) part 1593-1178P1.	For N604
H665 thru H669		Not used.	
H670	C	SCREW, EXTERNALLY RELIEVED BODY: stainless steel, passivated finish; hex head; wrench drive; dim., externally relieved body, 1 in. lg over-all; 3/8 in.-16 NC-2 thd, 9/16 in. lg; Hazeltine Elec (mfr and contr) part 207-1030P1.	For mounting H645 and H646
H671		STRAP, NUT, ELECTRON TUBE SOCKET: 1/16 in. thk brass, cadmium plated; 1-1/8 in. lg by 15/32 in. w by 3/8 in. h over-all; two 4-40 NC-2 tapped mtg holes spaced 0.875 in. c to c; Cinch Mfg Corp (mfr) part 1060; Hazeltine Elec (contr) part NTS-1000M-4.	For XV601, XV602, XV604, XV605, XV607, XV611, XV620 and XV623
H672		STRAP, NUT, ELECTRON TUBE SOCKET: 1/16 in. thk brass, cadmium plated; 1-11/32 in. lg by 17/32 in. w by 3/8 in. h over-all; two 4-40 NC-2 tapped mtg holes spaced 1.125 in. c to c; Cinch Mfg Corp (mfr) part 14167; Hazeltine Elec (contr) part NTS-1000N-44.	For XV603, XV606, XV612, XV613, XV614, XV615, XV616, XV617, XV618, XV619, XV621, XV622 and XV624
H673	C	NUT,COUPLING, ELECTRICAL CONDUIT: steel, designed for 9/16 in. conduit; 1/2 in. lg over-all, 3/4 in. od, 29/64 in. id at seat end; 5/8 in.-24 NEF-2 thd size, straight thd; Hazeltine Elec (mfr and contr) part 212-1008P2.	Part of flexible shaft assembly
H674	F	WASHER, NON-METALLIC: attaches bracket Hazeltine part MS-12881; synthetic rubber, Navy Spec 33R1, Class 1, neoprene; 15/32 in. od by 13/64 in. id by 1/8 in. thk; 35-45 durometer hardness rating; Hazeltine Elec (mfr and contr) part 1593-1112P1; (same as H320).	For bracket mounting
H675	C	WASHER, NON-METALLIC: rd; nylon; 5/16 in. od by 5/32 in. id by 0.031 in. thk over-all; Hazeltine Elec (mfr and contr) part 236-1114P2; (same as H157).	For E602
H676	C	PIN, STRAIGHT, HEADLESS: corrosion-resisting steel; 3/16 in. lg by 0.031 in. dia over-all; both ends sq; Hazeltine Elec (mfr and contr) part 1593-1223P1.	For MP623
H677	C	WASHER, NON-METALLIC: rd shape; glass cloth-silicone rubber; rd shaped hole; 0.260 in. dia by 9/16 in. thk; Hazeltine Elec (mfr and contr) part 236-1079P1; (same as H156).	For R663 and R664
H678	A	WASHER, NON-METALLIC: rd shape; gum rubber; rd shaped hole; 13/32 in. dia; 5/8 in. od by 1/32 in. thk; Hazeltine Elec (mfr and contr) part 236-1058P1.	For O654
H679	A	WASHER, NON-METALLIC: rd shape; gum rubber; rd shaped hole, 1/4 in. screw size; 7/16 in. od by 1/32 in. thk; Hazeltine Elec (mfr and contr) part 236-1057P1.	For O654

TABLE 8-3. MAINTENANCE PARTS LIST — Cont'd.

REF. DESIG.	NOTES	NAME AND DESCRIPTION	LOCATING FUNCTION
H680 and H681		Not used.	
H682	C	STUD, CONTINUOUS THREAD: non-magnetic corrosion resisting steel; no. 8-32 NC-2 thd size; 4 in. lg over-all; Hazeltine Elec (mfr and contr) part 234-1008P4; (same as H162).	Attaches R663 and R664
H683		Not used.	
H684	F	NUT, SELF-LOCKING, PLATE: stainless steel, passivate finish; 1/4-20 NC-2 by 7/32 in. deep; two lugs 1/8 in. thk; 1-5/8 in. lg by 5/8 in. w by 7/32 in. thk over-all; 9/16 in. center of nut to center of both mtg holes; Hazeltine Elec (mfr and contr) part 1593-1004P1; (same as H151).	For A623
H685	C	STUD, PLAIN: stainless steel, AISI 303, Navy Spec 46S18, Class 7, type A; 1/4 in. -20 NC-2 thd size designation, 11/32 in. lg of thd; 1/4 in. dia of unthreaded portion; 3-7/8 in. lg over-all; Hazeltine Elec (mfr and contr) part 1593-1174P1.	Ties resistor drive assembly together
HR601		HEATING ELEMENT, ELECTRICAL: 115 v, 150 w; sheathed, monel sheath; 8 in. lg by 1-1/2 in. w by 3/8 in. h excluding protruding terminals; Watlow Electric (mfr) part 1209D; Hazeltine Elec (contr) part 280-1090P1; (same as HR151).	Space heater
I601		LAMP, INCANDESCENT: 6 to 8 v, 0.15 amp design current; miniature bayonet base, bulb size T-3-1/4 clear, white light emitted; 1-3/16 in. max lg over-all; 3000 hr rated life; Navy type TB-14; General Electric (mfr) type 47; Hazeltine Elec (contr) part 277-1001P1.	PPI azimuth range illumination
I602		Same as I601.	PPI azimuth range illumination
I603		Same as I601.	PPI azimuth range illumination
I604		Same as I601.	PPI azimuth range illumination
I605		Same as I601.	PPI azimuth range illumination
I606		Same as I601.	PPI azimuth range illumination
I607		Same as I601.	PPI azimuth range illumination
I608		Same as I601.	PPI azimuth range illumination
I609		Same as I601.	Indicator power pilot light
I610		LAMP GLOW: neon gas; 1/25 w, 65 v ac striking voltage, 90 v dc striking voltage; 1-3/16 in. max over-all h; 105 to 125 v operation; General Electric (mfr) type NE51; Hazeltine Elec (contr) part 227-1004P1; (same as I401).	Power on warning light

TABLE 8-3. MAINTENANCE PARTS LIST — Cont'd.

REF. DESIG.	NOTES	NAME AND DESCRIPTION	LOCATING FUNCTION
I611		LENS, INDICATOR LIGHT: clear, 5/8 in. dia, transparent plastic, smooth face; 25/32 in. lg by 5/8 in. dia over-all; Dial Light Corp (mfr) part 91-937; Hazeltine Elec (contr) part 281-1002P2; (same as I418).	Lens for I610
I612	B	LENS, INDICATOR LIGHT: red, 1/2 in. dia, glass, smooth face, sand-blasted back, clear; 1 in. lg by 13/16 in. dia over-all; Dial Light Corp (mfr) part 20-11-1B; Hazeltine Elec (contr) part 281-1003P8.	Lens for I609
J601		CONNECTOR, RECEPTACLE, ELECTRICAL: 52 contacts; 3 connector mating ends; 42 no. 16 male pins, 10 amp, 8 no. 10 male pins, 30 amp, 2 no. 8 male pins, 40 amp; arc resistant plastic insert; straight shape; 1-1/32 in. lg by 3-1/2 in. sq, excluding protruding terminals; w/partially inclosing shell, die cast aluminum, resistant to corrosion; polarized; non-locking type, 2-13/16-18 NS-2 thd on shell for mating w/coupling nut; four 0.169 in. dia mtg holes on flange on 2.386 in. by 2.386 in. mtg centers; Cannon Electric (mfr) type AK-G52-32SL; Hazeltine Elec (contr) part 276-1128P1; (same as J407).	Main input connector
J602		JACK, TELEPHONE: spring leaf type contacts; 1-21/64 in. lg by 25/32 in. dia; 1/4 in. dia plug accommodated; w/shell, insulating material; Spec MIL-J-641A, MIL type JJ-034; Hazeltine Elec (contr) part 276-1114P1; (same as J410).	Phone plug
J603		CONNECTOR, RECEPTACLE, ELECTRICAL: 2 contacts; all connector ends are identical; 2 female flat parallel contacts, 125 v, 15 amp, 250 v, 10 amp; straight shape; 9/16 in. lg by 1-5/8 in. w by 1-1/4 in. h over-all; non-locking type; 1-3/8-18 NEF-2 thd size; weather-proof; Amphenol (mfr) part 97-4085; Hazeltine Elec (contr) part RC-1534.	Service outlet
L601		COIL, TUBE DEFLECTION: coils internally connected series aiding; 54 mh, 74 mh at 1000 cycles inductance; 230 ohms DC resistance; 650 turns of no. 35 AWG wire; 650 v peak operation, 44 ma max current; 2.4983 in. max dia by 2-1/8 in. lg excluding terminals; Hazeltine Elec (mfr and contr) part 375-1130G1.	PPI deflection coil
L602		COIL, TUBE FOCUSING: 3 windings, layer wound; focus coil 5260 ohms dc resistance, 2 centering coils 3400 ohms dc resistance ea coil; 475 v dc max voltage to case, 100 v dc max voltage between centering coil windings, focus coil rated 35 ma, centering coils rated 8 ma ea; 2-9/32 in. lg by 3-1/2 in. od by 1/575 in. id excluding terminals; im-pregnated; laminated core; hermetically sealed; Hazeltine Elec (mfr and contr) part 375-1126G1.	PPI focus and centering coil assembly
L603		COIL, RADIO FREQUENCY: one 3 pie universal winding; 17 mh ±2% at 1000 cycles, 88 ohms ±15% dc resistance, 15 ma; Hazeltine Elec (mfr and contr) part 375-1271G1.	Part of anti-jam network
L604		SUPPRESSOR, PARASITIC: 2 sections universal wound, 258 turns per pie, no. 38 single silk enameled copper wire; 1 mh inductance; wound on 18 meg resistor, 1 w power rating; 3/5 in. lg by 1/2 in. dia excl terminals; Hazeltine Elec (mfr and contr) part 375-1121G1.	Pulse sharpening conductor for V616A
M601		AMMETER: 0 to 100 ua, dc; black line at 0, red line at 50 ua; rd flush type, 2.695 in. dia flange, 2.21 in. dia by 1.86 in. lg barrel behind flange, excluding terminals; phenolic case; 935 ohms ±10% dc resist-ance at 25 deg C; black characters on white background; three no. 4-40 NC-2 by 1/2 in. lg mtg screws spaced 120 deg apart on 1.22 in. radius; two screw or solder lug terminals at rear spaced 1 in. c to c; Spec MIL-M-6A, MIL type MR26W100DCUA modified; Weston (mfr) per Hazeltine Elec dwg 1590-1111P1; Hazeltine Elec (contr) part 1590-1111P1; (same as M501).	Coho tuning and line voltage meter

TABLE 8-3. MAINTENANCE PARTS LIST — Cont'd.

REF. DESIG.	NOTES	NAME AND DESCRIPTION	LOCATING FUNCTION
MP601	C	BEZEL: cylindrical shape; aluminum alloy, 356-T6; alodine, USMC green; 6-3/8 in. dia by 2-1/8 in. lg over-all; six 0.169 in. dia through and counterbore 3/8 in. dia by 1/16 in. deep mtg holes spaced 60 deg apart on 5.937 in. dia bolt circle; six no. 4-40 NC-2 tap by 1/4 in. deep holes equally spaced 60 deg apart on 4.812 in. dia bolt circle located on undercut 1 in. from one end; Hazeltine Elec (mfr and contr) part CS-1687.	For window H606
MP602	A	WINDOW, DIAL: plexiglass, clear; rd shape; 10-9/16 in. dia by 3/16 in. thk over-all; Hazeltine Elec (mfr and contr) part PX-1253.	For dial MP604
MP603	C	BEZEL: cylindrical shape; aluminum alloy, 356-T6; alodine, USMC green; 11-15/16 in. dia by 2 in. lg over-all; eight 0.196 in. dia through and counterbore 3/8 in. by 1/16 in. deep mtg holes equally spaced 45 deg apart on 11.469 in. dia bolt circle; eight no. 4-40 NC-2 tap by 1/4 in. deep holes equally spaced 45 deg apart on 10.312 in. dia bolt circle located on undercut 19/64 in. from one end; Hazeltine Elec (mfr and contr) part CS-1688.	For window MP602
MP604	C	DIAL, SCALE: inscribed 0 to 350 left to right, range of inscription is linear, graduated in 1 deg increments and 10 deg scale div; 3/16 in. h by 10-29/32 in. dia over-all; Hazeltine Elec (mfr and contr) part A-18666.	For V609
MP605	C	SHAFTING, FLEXIBLE: power drive type; cw rotation; monel wire; 0.150 in. dia; max in lb torque strength per ft; deg max deflections per ft; Hazeltine Elec (mfr and contr) part 212-1006P1.	Part of flexible shaft assembly
MP606		DIAL, SCALE: heat resistant plastic; amber color; inscribed 0 to 6400; range of inscription is linear, graduated at 50 MIL intervals w/ numbered graduations at 100 MIL intervals; 1/8 in. h characters; six 0.159 in. dia holes equally spaced at 60 deg on a 10.437 in. dia; Hazeltine Elec (mfr and contr) part/dwg A-18887.	For V609
MP607	F	SPRING, HELICAL, COMPRESSION: spring wire, rd material; 0.047 in. dia material; cadmium plated finish; 3 in. free over-all lg by 3/8 in. od by 9/32 in. id; Hazeltine Elec (mfr and contr) part 1593-1163P2.	For XV625
MP608	C	COUPLING, SHAFT, FLEXIBLE: steel; 9/16 in. od by 3/4 in. lg over-all; 1/16 in. h flange located at one end; other end tapered to 11/32 in. dia; S.S. White Dental Mfg Co (mfr) part 3279A; Hazeltine Elec (contr) part 212-1009P2.	Part of flexible shaft assembly
MP609		GROMMET, RUBBER: synthetic rubber, MIL-G-3036; 2-1/8 in. od of flange, 1-3/4 in. od of groove, 3/16 in. thk of flange, 1-1/2 in. dia hole, 1/2 in. over-all height, 1/8 in. w groove; Spec MIL-G-3036, part AN931A24-28; Hazeltine Elec (contr) part 359-1001P22.	Protects cable insulation
MP610		GROMMET, RUBBER: synthetic rubber, MIL-G-3036; 7/16 in. od of flange, 5/16 in. od of groove, 1/16 in. thk of flange, 3/16 in. dia hole, 1/4 in. over-all h, 1/8 in. w groove; Spec MIL-G-3036, part AN931A3-5; Hazeltine Elec (contr) part 359-1001P12.	For XV625
MP611		Not used.	

TABLE 8-3. MAINTENANCE PARTS LIST — Cont'd.

REF. DESIG.	NOTES	NAME AND DESCRIPTION	LOCATING FUNCTION
MP612	C	CUSHION, ELECTRON TUBE: synthetic rubber per Spec MIL-R-3065; rd shape, 2-15/16 in. od by 1-3/4 in. id by 3/8 in. thk; id one side beveled to 90 deg; Hazeltine Elec (mfr and contr) part MP1673.	For V609
MP613	C	GEAR, WORM: straight type; stainless steel; 6 thd, 20 deg pressure angle; 1/2 in. dia pitch, 3/4 in. thd lg; rh thd; 18 deg 20 min helix angle; 0.552 in. od, 0.2509 in. dia bore; Hazeltine Elec (mfr and contr) part 1593-1070P1.	Part of V609 tube mounting
MP614	F	SPRING, HELICAL, COMPRESSION: spring steel wire; rd material 0.044 in. dia; 9/16 in. free over-all lg of spring, 25/32 in. od; Hazeltine Elec (mfr and contr) part 288-1027P1.	Tension for MP623
MP615	C	CAM, GEAR: brass; chromium plate; entagon shape; 25/64 in. lg by 3/8 in. w by 7/32 in. thk over-all; two no. 4-40 NC-2 tapped mtg holes spaced 1/4 in. c to c; Hazeltine Elec (mfr and contr) part 1593-1213P1.	For O610
MP616	C	SHAFT, RIGID: rd shape; stainless steel; 2-5/8 in. lg by 1/4 in. dia over-all; one end threaded 1/4-28 NF-3 by 5/16 in. lg; Hazeltine Elec (mfr and contr) part 1593-1066P1.	For MP613
MP617	C	RING, ELECTRICAL CONTACT: coin silver; rd shape; 3.156 in. od by 3.131 in. id by 0.126 in. h over-all; mounts by tab on inside surface of ring; Hazeltine Elec (mfr and contr) part 1593-1044G1.	Used with L601
MP618	C	CLAMP, ELECTRICAL: stainless steel; passivating dip; 2 screw type fastening devices; 3-9/16 in. lg by 1/2 in. w by approx 1-1/16 in. h over-all; designed to hold material approx 2-1/16 in. dia; Hazeltine Elec (mfr and contr) part 1593-1095P1.	For XV625
MP619		RETAINER, ELECTRON TUBE: for medium shell octal tube base; 7/8 in. between center line of retainer and center line at mtg hole, 17/32 in. high; lever and spring locked at position 145 deg from center line of retainer; 3/16 in. wide mtg slot; band beryllium copper, other parts 18% nickel; Augat (mfr) part 1021-2; Hazeltine Elec (contr) part CP-1412-2.	For V608
MP620	A	GASKET: synthetic rubber, Spec MIL-R-3065, Grade SC-305FF; 11-1/8 in. dia of aperture by 11-13/16 in. od by 3/32 in. thk; 11-15/32 in. bolt circle dia; 8 bolt holes 0.166 in. dia; Hazeltine Elec (mfr and contr) part GA-1752.	For MP603
MP621	A	GASKET: synthetic rubber, Spec MIL-R-3065, Grade SC-305FF; 10 in. dia of aperture by 10-19/32 in. od by 1/16 in. thk; 10-5/16 in. bolt circle dia; 8 bolt holes 0.144 in. dia; Hazeltine Elec (mfr and contr) part GA-1753.	For N601
MP622	A	GASKET: synthetic rubber, Spec MIL-R-3065, Grade SC-305FF; 5-17/32 in. dia of aperture by 6-7/32 in. od by 1/16 in. thk; 5-15/16 in. bolt circle dia; 6 bolt holes 0.169 in. dia; Hazeltine Elec (mfr and contr) part GA-1754.	For MP601
MP623		COUPLING, SHAFT, RIGID: stainless steel; 3/4 in. lg by 1 in. dia over-all; Hazeltine Elec (mfr and contr) part 1593-1068P1.	For MP616
MP624	F	RING, RETAINING, GASKET: aluminum alloy, black enamel finish; rd shape, 10-15/16 in. dia by 1 in. h over-all; Hazeltine Elec (mfr and contr) part A-18668.	Retains MP627

TABLE 8-3. MAINTENANCE PARTS LIST — Cont'd.

REF. DESIG.	NOTES	NAME AND DESCRIPTION	LOCATING FUNCTION
MP625	F	RING, RETAINING, WINDOW: aluminum alloy, black enamel finish; rd shape, 10-3/4 in. od by 10 in. id by 0.064 in. thk over-all; eight 0.144 in. dia mtg holes equally spaced at 45 deg on 10-5/16 in. dia bolt circle; Hazeltine Elec (mfr and contr) part MS-12674.	Retains MP602
MP626	C	CLAMP, ELECTRICAL: nylon; screw type fastening device; 23/32 in. lg by 3/8 in. h over-all; designed to hold material 0.190 in. max dia; Burndy Engineering Co (mfr) type HP-3N; Hazeltine Elec (contr) part CP-1295-3; (same as H142).	For B601
MP627	C	GASKET: synthetic rubber, Spec MIL-R-3065, Grade SC-305FF; 10-27/32 in. od, six arc-shaped cut-outs equally spaced 60 deg apart on 10-7/16 in. dia circle, 15/16 in. thk over-all, 9-3/8 in. dia center hole on bearing surface, 3/8 in. underside corner radius, undercut 10-15/32 in. dia by 27/32 in. deep; Hazeltine Elec (mfr and contr) part GA-1763	For V609
MP628	C	BUSHING, SLEEVE: stainless steel, passivate finish; 5/16 in. lg by 3/4 in. od by 17/32 in. id; shoulder 0.624 in. max od by 1/4 in. deep; Hazeltine Elec (mfr and contr) part 1620-1015P1; (same as O146).	Bushing for unit inner case
MP629	C	ROLLER, BEARING: rd shape; brass; flat end; solid; 7/16 in. lg by 1-1/16 in. od by 0.315 in. id; Hazeltine Elec (mfr and contr) part 1620-1014P1; (same as O140).	For inner case upper mount assembly
MP630		Not used.	
MP631	F	PLATE, REINFORCING: brass, nickel plated; rectangular shape, 7/8 in. lg by 3/8 in. w by 0.122 in. thk over-all; two no. 8-32 NC-2 tapped mtg holes spaced 1/2 in. c to c; Hazeltine Elec (mfr and contr) part 224-1008P3; (same as O134).	For MP630
MP632		CLAMP, LOOP: nylon; 13/16 in. lg by 3/8 in. h over-all; designed to hold material 0.310 in. max dia; Burndy Engineering Co (mfr) type HP-5N; Hazeltine Elec (contr) part CP-1295-5.	Cable clamp
MP633		CLAMP, LOOP: nylon; 1 screw, 0.173 in. dia hole for screw; 0.375 in. in. w, 0.045 in. material thk over-all dim., designed to hold material 0.48 in. dia w/clamp flanges closed to 0.125 in. apart; Burndy Engineering Co (mfr) part HP-8N; Hazeltine Elec (contr) part CP-1295-8; (same as H139).	Cable clamp
MP634 and MP635		Not used.	
MP636	C	KNOB: set screw type; 1.344 in. max dia by 1.027 in. max h over-all; vaporhoned w/mesh grit on all external surfaces; black; w/marking; Raytheon (mfr) series 90; Hazeltine Elec (contr) part/dwg 231-1058G6; (same as E510).	For A618, A619 and O608
MP637		Not used.	
MP638	C	CAM, CONTROL: stainless steel, passivating dip; irregularly spaced; c/o 1 cam plate part 1593-1204P1, 1 hub part 1593-1206P1 and 2 locking pins part 293-1022P3; Shaft mounted; Hazeltine Elec (mfr and contr) part 1593-5050G1.	Control for S617

TABLE 8-3. MAINTENANCE PARTS LIST — Cont'd.

REF. DESIG.	NOTES	NAME AND DESCRIPTION	LOCATING FUNCTION
N601	C	CURSOR, INDICATOR: heat resistant plastic acrylic shell, amber color, per MIL-P-5425A, finish A; engraved lines filled with permanent black; 9-15/16 in. dia by 5/16 in. thk; four 0.187 in. dia through and counterbore 0.312 in. dia by 0.050 in. deep mtg holes spaced 90 deg apart on 9 in. dia bolt circle; Hazeltine Elec (mfr and contr) part A-18895.	Auxiliary cursor
N602		Not used.	
N603	C	PLATE, INSTRUCTION: aluminum; white inscription on red background; inscribed "DANGER HIGH VOLTAGE"; 3 in. lg by 1 in. w by 0.040 in. thk over-all; two 0.128 in. dia mtg holes spaced 2-3/4 in. c to c; Hazeltine Elec (mfr and contr) part 249-1037P1; (same as N101).	Warning label
N604	C	DIAL, SCALE: rpm; for antenna speed control; 0 to 15 clockwise and counterclockwise; range of inscription is linear; graduated in 30 scale div cw and ccw; other markings incl "cw" and "ccw"; all characters are raised; 2-3/4 in. dia by 0.040 in. thk over-all; Hazeltine Elec (mfr and contr) part 1593-1177P1.	Dial for antenna speed control
O601 thru O606		Not used.	
O607	C	BEARING, BALL, ANNULAR: ground; single row; radial; double shield; light duty; counterbore; 1/8 in. bore dia; 2-15/16 in. od by 2-1/4 in. id by 5/16 in. h; lubricated w/Colonial Beacon M285; standard fit; standard tolerance; non-magnetic; Howe Engineering Co (mfr) type 1745; Hazeltine Elec (contr) part 302-1013P1.	Part of tube deflection yoke for V609
O608	C	RING, BEARING RETAINER: for ball bearing; brass, bright alloy plated; 2-7/16 in. od by 1-9/16 in. id by 0.178 in. h over-all; six 0.144 in. dia mtg poles equally spaced on 2 in. dia bolt circle; Hazeltine Elec (mfr and contr) part 1593-1038P1.	Retains O607
O609	C	RING, RETAINING, COIL: for tube deflection coil; brass, bright alloy plated; 3-1/8 in. od by 2.449 in. id by 0.050 in. thk over-all; six 0.120 in. dia mtg holes equally spaced on 2.813 in. dia bolt circle; Hazeltine Elec (mfr and contr) part 1593-1032P1.	Retains L601
O610	C	GEAR, WORM: straight type; phosphor bronze, Navy Spec 46B-5, grade 1; sand-blasted; bright alloy plated; 144 teeth; 3-1/8 in. w face, 20 deg pressure angle, 3.994 in. dia pitch, rh thd, 18 deg 26 min helix angle, 1/8 in. radius of throat, 2-9/16 in. throat dia; 4.047 in. max od, 2-3/8 in. dia bore; Hazeltine Elec (mfr and contr) part 1593-1040P1.	Part of deflection coil yoke for V609

TABLE 8-3. MAINTENANCE PARTS LIST — Cont'd.

REF. DESIG.	NOTES	NAME AND DESCRIPTION	LOCATING FUNCTION
O611		GEAR, BEVEL: straight type; 120 teeth, 3-1/8 in. w face, 20 deg pressure angle, 3-3/4 in. pitch dia, 49 deg 55 min pitch angle; 3.8 in. od, 2-7/16 in. dia bore, 3/16 in. lg over-all, 3/32 in. backing to pitch line; Hazeltine Elec (mfr and contr) part 1593-1041P1.	Part of deflection coil yoke for V609
O612	C	SHIM, GEAR: nylon base phenolic formica; 3-1/8 in. od by 2.511 in. id by 1/32 in. thk over-all; six 0.120 in. dia mtg holes equally spaced on 2.813 in. dia bolt circle; Hazeltine Elec (mfr and contr) part 1593-1033P1.	Used between O609 and E603, E603 and O611
O613 and O614		Not used.	
O615	C	SHIELD, LIGHT, ELECTROSTATIC: aluminum alloy; 12-5/16 in. dia by 1-1/2 in. h over-all; Hazeltine Elec (mfr and contr) part FP-1921.	Shields I601 through I608, XDS601 through XDS604
O616		ADAPTER, SHAFT: brass, bright alloy plated; cylindrical body w/sq mtg flange; 1-9/32 in. lg by 1 in. w by 1 in. h over-all; one end threaded 5/8-24 NEF-2 by 1/2 in. lg; hole 3/8 in. dia by 3/4 in. lg one end, hole 3/16 in. dia by 17/32 in. lg other end; Hazeltine Elec (mfr and contr) part 1593-1061P1.	Adapter for O613
O617		GEAR, BEVEL: straight type; plain; 16 teeth, 5 deg 32 min face angle, 20 deg pressure angle, 1/2 in. pitch dia, 4 deg 55 min pitch angle; 9/16 in. od, 3/16 in. dia bore, 0.320 in. lg over-all; Hazeltine Elec (mfr and contr) part 1593-1165P1.	Drives O611
O618		SHIELD, COIL: mu-metal; 3-9/16 in. od by 1-9/16 in. id by 0.031 in. thk; Hazeltine Elec (mfr and contr) part 1593-1077P1.	Base shield for L602
O619		RING, BUMPER: aluminum; 2-3/8 in. od by 1-11/16 in. id by 5/64 in. thk; four 0.169 in. dia mtg holes equally spaced; Hazeltine Elec (mfr and contr) part 1593-1017P1.	Mounting for A604
O620		COUPLING, SHAFT, FLEXIBLE: bronze and brass; 1-3/16 in. w by 13/16 in. h over-all; Hazeltine Elec (mfr and contr) part 212-1010P1.	For R662, R665, R1693, R1696, S606 and S607
O621		SHAFT, FLEXIBLE: c/o 1 flexible shaft, 13-7/8 in. lg, part 212-1012P1, 1 shaft part 1593-1105P1, 1 elastic grommet part 351-1001P23, 1 fitting part 1593-1072P1; cylindrical shape, 15-5/8 in. lg by 7/16 in. dia over-all; Hazeltine Elec (mfr and contr) part 1593-1137G1.	For R1693 and R1696
O622 and O623		Not used.	
O624		SHAFT, FLEXIBLE: c/o 1 flexible shaft, 12-11/16 in. lg, part 212-1012P1, 1 shaft part 1593-1106P1, 1 elastic grommet part 359-1001P23, 1 fitting part 212-1011P2; cylindrical shape, 15 in. lg by 1/2 in. dia over-all; Hazeltine Elec (mfr and contr) part 1593-1136G1.	For R610, R617, R651 R660, R691, R1629, R1655, R1646, R1687, R1689 and R2601

TABLE 8-3. MAINTENANCE PARTS LIST — Cont'd.

REF. DESIG.	NOTES	NAME AND DESCRIPTION	LOCATING FUNCTION
O625		SHAFT, FLEXIBLE: c/o 1 flexible shaft, 6-7/8 in. lg, part 212-1012P1, 1 shaft part 1593-1106P1, 1 fitting part 1593-1072P1; cylindrical shape, 8-5/8 in. lg by 3/8 in. dia over-all; Hazeltine Elec (mfr and contr) part 1593-1137G2.	For R662 and R665
O626		SHAFT, FLEXIBLE: c/o 1 flexible shaft, 13-13/16 in. lg, part 212-1012P1, 1 shaft part 1593-1105P1, 1 elastic grommet part 359-1001P23, 1 fitting 212-1011P2; cylindrical shape, 16-3/16 in. lg by 1/2 in. dia over-all; Hazeltine Elec (mfr and contr) part 1593-1136G2.	For R659, R671, R682, R683 and R1657
O627 and O628		Not used.	
O629	A	GASKET: gum rubber; 4-1/2 in. dia of aperture by 5-3/32 in. od by 1/16 in. thk; 4.312 in. bolt circle dia, 6 bolt holes 0.143 in. dia; Hazeltine Elec (mfr and contr) part 1593-1104P1.	For H606
O630	C	RING, RETAINING, WINDOW: 1/4 hard aluminum, black anodize finish; rd shape, 5.093 in. od by 4.500 in. id by 0.050 in. thk over-all; six 0.143 in. dia mtg holes equally spaced on 4.812 in. dia bolt circle; Hazeltine Elec (mfr and contr) part 1593-1103P1.	Retains H606
O631		RING, SUPPORT, CUSHION: 1/4 hard aluminum, black anodize finish; rd shape, 5.343 in. od by 4.500 in. id by 0.050 in. thk over-all; Hazeltine Elec (mfr and contr) part 1593-1130P1.	Support for H607
O632		GASKET: gum rubber; 15/32 in. dia of aperture by 1 in. od by 1/16 in. thk; one bolt hole 5/32 in. dia; Hazeltine Elec (mfr and contr) part 1593-1110P1.	Part of knob lock mounting for R602, R608 and R2618
O633		GASKET: gum rubber; 13/32 in. dia of aperture by 1 in. od by 1/16 in. thk; one bolt hole 5/32 in. dia; Hazeltine Elec (mfr and contr) part 1593-1110P2.	Part of shaft mounting for R659, R671, R682, R683, R1657, R1693 and R1696
O634	A	GASKET: black neoprene, Navy Spec 33R, Class I; 1/4 in. dia of aperture by 11/16 in. od by 3/16 in. thk; Hazeltine Elec (mfr and contr) part 1593-1150P1.	For H610
O635		Not used.	
O636		GASKET: gum rubber; 2-9/16 in. dia of aperture by 1/32 in. thk; 4 bolt holes 0.196 in. dia; 2-25/64 in. c to c distance between bolt holes along the lg, 2-25/64 in. c to c distance between bolt holes along the w, 3-1/8 in. over-all w; 1/8 in. outside corner radius; 3-1/8 in. over-all lg, 0.367 in. distance from outside edge to center of first bolt hole along the sides; Hazeltine Elec (mfr and contr) part 1593-1118P1.	Mounting gasket for J601
O637		GASKET: synthetic rubber; 2-1/8 in. dia of aperture by 2-11/16 in. od by 2.44 in. bolt circle dia; 6 bolt holes 3/32 in. dia; Neasil Corp (mfr) part 1006-56; Hazeltine Elec (contr) part 287-1035P1; (same as O464).	Mounting gasket for J603
O638	B	COVER, ELECTRICAL CONNECTOR: metallic, resistant to corrosion; 1-9/16 in. dia by 7/16 in. h, excluding chain; internally threaded w/ 1-3/8-18 thd; Amphenol (mfr) part 9760-22; Hazeltine Elec (contr) part 218-1001P9; (same as O419).	For J603

TABLE 8-3. MAINTENANCE PARTS LIST — Cont'd.

REF. DESIG.	NOTES	NAME AND DESCRIPTION	LOCATING FUNCTION
O639	A	GASKET: synthetic rubber, Spec JAN-R-1149, Class I, Type I; 1-1/4 in. dia of aperture; 0.031 in. thk; 4 bolt holes 0.128 in. dia; 1-1/4 in. c to c distance between bolt holes along the sides; 1-5/8 in. w over-all; 1-5/8 in. lg over-all; 3/16 in. distance from outside edge to center of bolt holes; Hazeltine Elec (mfr and contr) part 287-1030P9; (same as O413).	Mounting gasket for J603
O640	C	GASKET: gum rubber; rectangular shape; channel style; 20-13/16 in. lg by 1 in. w by 7/16 in. thk over-all; channel groove 9/16 in. w by 3/16 in. deep full lg; four 1/4 in. dia mtg holes equally spaced; Hazeltine Elec (mfr and contr) part 1593-1151P1.	Gasket for top and bottom of front panel
O641	C	GASKET: gum rubber, 30-40 durometer; rectangular shape; 21-7/8 in. lg by 1 in. w by 7/16 in. thk; 9/16 in. w by 1/4 in. deep groove along entire lg; four 1/4 in. dia mtg holes equally spaced; Hazeltine Elec (mfr and contr) part 1593-1152P1.	Gasket for left and right sides of front panel
O642 and O643		Not used.	
O644		SHELL, ELECTRICAL CONNECTOR: aluminum; tin plated; cylindrical body w/sq mtg flange; 53/64 in. lg by 1-9/32 in. sq over-all; four 0.120 in. dia mtg holes on 31/32 in. by 31/32 in. mtg centers; threaded portion 1-20 NEF-2 by 5/8 in. lg; Hazeltine Elec (mfr and contr) part 1593-1085P1; (same as O405).	For J602
O645	A	GASKET: gum rubber; 13/16 in. dia of aperture; 1/16 in. thk; 4 bolt holes 0.120 in. dia; 31/32 in. c to c distance between bolt holes along the lg, 31/32 in. c to c distance between bolt holes along the w; 1-9/32 in. over-all w; 1/16 in. outside corner radius; 1-9/32 in. over-all lg; 5/32 in. distance from outside edge to center of first bolt hole along the sides; Hazeltine Elec (mfr and contr) part 1593-1116P1.	Mounting gasket for O644
O646		COVER, ELECTRICAL CONNECTOR: metallic, resistant to corrosion; 1-1/8 in. dia by 7/16 in. h, excluding chain; internally threaded w/ 1-20 thd; Amphenol (mfr) part 9760-16; Hazeltine Elec (contr) part 218-1001P19.	For O644
O647 thru O650		Not used.	
O651		ADAPTER, SHAFT, FLEXIBLE: stainless steel, passivate finish; cylindrical shape w/hex flange; 1/2 in. lg by 1/2 in. w across flats; body threaded 3/8-32 NEF-2 by 19/64 in. lg; 0.256 in. max id full lg; Hazeltine Elec (mfr and contr) part 1593-1107P2.	Adapter for O621 and O626
O652	C	ADAPTER, SHAFT, FLEXIBLE: stainless steel, passivate finish; cylindrical shape w/hex flange; 3/8 in. lg by 1/2 in. w across flats; body threaded 3/8-32 NEF-2 by 11/64 in. lg; 0.256 in. max id full lg; Hazeltine Elec (mfr and contr) part 1593-1107P1.	Adapter for O620
O653	C	ARM, LOCK: stainless steel, black passivate finish; irregular "L" shape, 1-13/16 in. lg by 1/2 in. w by 7/8 in. h over-all; Hazeltine Elec (mfr and contr) part 1593-1064G1.	Used with O655 for locking knob E608
O654		BEARING, SLEEVE: stainless steel, black passivate finish; shank threaded 3/8-32 NEF-2 by 9/32 in. lg; cylindrical shape w/flange; 0.465 in. lg by 9/16 in. od by 0.251 in. id over-all; Hazeltine Elec (mfr and contr) part 1593-1074P1.	For O653

TABLE 8-3. MAINTENANCE PARTS LIST — Cont'd.

REF. DESIG.	NOTES	NAME AND DESCRIPTION	LOCATING FUNCTION
O655		SPRING ASSEMBLY, DETENT: incl 1 ea Hazeltine Elec part 1593-1053P1 Bracket, 1593-1052P1 Detent Spring, 1593-1162P1 Reinforcement Plate; irregular shape; 1-53/64 in. lg by 1-3/8 in. w by 7/16 in. thk over-all; 4 mtg holes tapped for no. 4-40 NC-2 thd on 11/16 in. mtg centers; center hole 0.640 in. dia located in bracket; Hazeltine Elec (mfr and contr) part 1593-1057G1.	Used with O653 for locking knob E608
O656		ADAPTER, SHAFT: brass, bright alloy plated; cylindrical body w/sq mtg flange; 1.408 in. lg by 1 in. w by 1 in. h over-all; one end threaded 5/8-24 NEF-2 by 7/16 in. lg; four 0.144 in. dia mtg holes on 11/16 in. by 11/16 in. mtg centers located on flange; hole 0.460 in. dia by approx 1 in. lg one end; hole 0.282 in. dia by 0.407 in. lg other end; Hazeltine Elec (mfr and contr) part 1593-1054P1.	For O608
O657		ARM, DETENT: stainless steel, passivate finish; rectangular shape w/ rounded corners; 1-11/16 in. lg by 3/8 in. w by 0.078 in. thk over-all; Hazeltine Elec (mfr and contr) part 1593-1073P1.	For O655
O658	A	GASKET: gum rubber; 7/16 in. dia of aperture by 1/32 in. thk; 4 bolt holes 0.144 in. dia; 11/16 in. c to c distance between bolt holes along the lg, 11/16 in. c to c distance between bolt holes along the w; 1 in. over-all w; 1/8 in. outside corner radius, 1 in. over-all lg; 5/32 in. distance from outside edge to center of first bolt hole along the sides; Hazeltine Elec (mfr and contr) part 1593-1055P1.	For adapter O656
O659		RING, RETAINING: carbon spring steel; 0.209 to 0.217 in. id; dim.; 0.025 in. major thk; Waldes Kohinoor (mfr) ring 5103-25; Hazeltine Elec (contr) part 1593-1154P1.	For O651 and O652
O660		ADAPTER, SHAFT, FLEXIBLE: stainless steel, passivate finish; cylindrical shape w/hex flange; 7/16 in. lg by 1/2 in. w across flats; body threaded 3/8-32 NEF-2 by 15/64 in. lg; 0.256 in. max id full lg; Hazeltine Elec (mfr and contr) part 1593-1107P3.	For O621 and O624
O661		NUT, PACKING, HEXAGON: brass, nickel plated; semi-finished; chamfered bearing surface; 3/8-32 NEF-2 thd; 5/8 in. w across flats, 7/32 in. h over-all incl jacket and sleeve; Radio Frequency Lab (mfr) part H-1268; Hazeltine Elec (contr) part 203-1003G2; (same as MP106).	For H615, S602, S606, S607, S608, S609, S613 and S614
O662		PLATE, COUPLING: rectangular shape; stainless steel Navy Spec 47S20 (INT), Class 4, Condition A; 1 in. lg by 3/8 in. w by 1/8 in. thk; w/ 0.275 in. lg by 5/32 in. w slot located in center of plate; 0.015 in. by 45 deg bevel on four edges; Hazeltine Elec (mfr and contr) part 1593-1065P1.	For O614 shaft
O663	F	KEY, MACHINE: brass; 7/8 in. lg by 1/16 in. w by 1/16 in. h over-all; Hazeltine Elec (mfr and contr) part 371-1002P1.	Shaft key
O664 and O665		Not used.	
O666	F	RING, MOUNTING, BEARING: brass; 3-1/2 in. od by 2-3/4 in. id by 3/16 in. h over-all; six 4-40 NC-2 thd mtg holes equally spaced on 3-5/16 in. dia bolt circle; accommodates bearing 2.955 in. dia; Hazeltine Elec (mfr and contr) part 1593-1037P1.	Retains O607

TABLE 8-3. MAINTENANCE PARTS LIST – Cont'd.

REF. DESIG.	NOTES	NAME AND DESCRIPTION	LOCATING FUNCTION
O667 thru O670		Not used.	
O671		RETAINER, CAPACITOR: spring steel; "U" shape; 5/8 in. lg by 13/32 in. w by 3/4 in. h over-all; accommodates material 11/16 in. max dia; one 0.140 in. dia mtg hole and 2 prongs on bottom; Prestole (mfr) part 500-625; Hazeltine Elec (contr) part 243-1003P3.	For C606, C607, C620, C624, C629, C639 and C640
O672 and O673		Not used.	
O674	C	STRAP, RETAINING: stainless steel, passivate finish; 25/32 in. lg by 3/8 in. w by 25/64 in. h over-all; one 0.193 in. dia hole at one end; Hazeltine Elec (mfr and contr) part 1620-1005P1; (same as O102).	Secures H630 to A623
O675	A	GASKET: pure gum natural rubber; rectangular shape; rectangular 26-11/16 in. lg by 22-3/16 in. w by 1/4 in. thk over-all, w/4 corners rounded on 1/8 in. radius; single hole 26-1/16 in. lg by 21-9/16 in. w w/4 corners rounded on 7/32 in. radius; Hazeltine Elec (mfr and contr) part 1620-1012P1; (same as O133).	Gasket for A620
O676 thru O680		Not used.	
O681	C	ROLLER, BEARING: round; stainless steel; flat end; solid; 3/4 in. dia; 1-1/4 in. lg; Hazeltine Elec (mfr and contr) part 1593-1013G1.	For A624 upper mount assembly
O682 thru O684		Not used.	
O685		SPRING, HELICAL, TORSION: 0.051 in. dia stainless steel; spring temper; passivate finish; 7/8 in. lg by approx 0.289 in. w by approx 0.608 in. h over-all; Hazeltine Elec (mfr and contr) part 1620-1006P1; (same as O139).	For case A623
O686 and O687		Not used.	
O688	C	BAR, LOCKING: stainless steel, passivated finish; irregular shape; 2-3/4 in. lg by 1/2 in. w by 1/2 in. h over-all; two 0.313 in. max dia mtg holes spaced 1-1/16 in. c to c; w/cutout 9/16 in. deep by 0.197 in. lg and hole 0.099 in. dia, 3/32 in. from same end; Hazeltine Elec (mfr and contr) part 1593-1006P1.	Arm for H645 and H646
O689		SHAFT, FLEXIBLE: c/o 1 flexible shaft, 14-1/16 in. lg, part 212-1012P1, 1 shaft part 1593-1105P1, 1 elastic grommet part 359-1001P23, 1 fitting part 212-1011P2; cylindrical shape; 16-7/16 in. lg by 1/2 in. dia over-all; Hazeltine Elec (mfr and contr) part 1593-1136G3.	For R671
O690		SHAFT, FLEXIBLE: c/o 1 flexible shaft, 13-9/16 in. lg, part 212-1012P1, 1 shaft part 1593-1105P1, 1 fitting part 212-1011P2; cylindrical shape; 15-15/16 in. lg by 1/2 in. dia over-all; Hazeltine Elec (mfr and contr) part 1593-1136G4.	For R1617

TABLE 8-3. MAINTENANCE PARTS LIST — Cont'd.

REF. DESIG.	NOTES	NAME AND DESCRIPTION	LOCATING FUNCTION
O691	F	RETAINER, HANDLE: aluminum alloy, painted USMC green; rectangular shape w/ea corner chamfered; 4-3/4 in. lg by 7/8 in. w by 7/8 in. h over-all; two 0.348 in. dia mtg holes spaced 2 in. c to c; incl two dowel pins spaced 3-1/4 in. c to c; Hazeltine Elec (mfr and contr) part 1620-1010G1; (same as O144).	Mounting block for H643
O692	C	BUSHING, HANDLE: stainless steel, passivate finish; cylindrical shape, 5/8 in. lg by 5/8 in. od, one id 0.390 in. by 1/2 in. lg, other id 0.328 in. by 1/8 in. lg; Hazeltine Elec (mfr and contr) part 204-1009P1; (same as O142).	Bushing for H617
O693	C	SHIM: plastic; rectangular shape; 1-15/16 in. lg by 5/8 in. w by 1/32 in. thk; Hazeltine Elec (mfr and contr) part 1593-1181P1.	For S617 and S618
O694	C	VALVE, SAFETY RELIEF: aluminum, painted USMC green; air type; mtg thd 3/4-16 NF-2 by 19/32 in. lg from body on one end; fixed; 2-3/4 in. dia by 9/16 in. lg excluding mtg thd; A. Schrader (mfr) part 4594; Hazeltine Elec (contr) part 381-1012P1; (same as O145).	Air pressure valve for A623
O695	A	GASKET: black neoprene; 2-11/32 in. dia of aperture by 2-25/32 in. od by 1/16 in. thk 2-17/32 in. bolt circle dia, 6 bolt holes 0.116 in. dia; Hazeltine Elec (mfr and contr) part 1593-1172P1.	Gasket for H662
O696	C	BUSHING, THREADED, FLANGED: stainless steel; 5/16 in. max id by 3/4 in. w by 1/8 in. h over-all; hex shaped flange 1/32 in. thk; 15/32-32 NS-1 external thd, approx 1/16 in. lg of threaded portion; Hazeltine Elec (mfr and contr) part 1593-1182P1.	Bushing for H663
O697	C	GEARSHAFT, SPUR: stainless steel AISI 303, Navy Spec 46S18, Class 7, type A; passivating dip; modified cylindrical shape; 2-23/32 in. lg by 3/4 in. dia; shaft mounted; plain type gear; 22 teeth; 14-1/2 deg pressure angle; 3/4 in. od of gear, 0.688 in. pitch dia; Hazeltine Elec (mfr and contr) part 1593-1209P1.	Drives dial shaft
O698	C	SHAFT ASSEMBLY, DIAL: stainless steel, passivating dip; round shape; c/o 1 shaft part 1593-1180P1, 1 gear part 1593-1193P2, 1 cam part 1593-1205P1, 1 pin 1593-1185P1 and 2 locking pins part 293-1022P7; mounts by one no. 2-56 NC-2 thd by 1/4 in. deep hole at one end of shaft; Hazeltine Elec (mfr and contr) part 1593-5049G1.	Shaft assembly for N604
O699	C	GEAR ASSEMBLY, IDLER: c/o 2 brass gears Hazeltine Elec parts 1593-1191P2 and 1593-1193P2, 1 stainless steel shaft; 1-5/8 in. lg by 3-1/16 in. dia over-all; gears secured to flange on shaft by lock pins; Hazeltine Elec (mfr and contr) part 1593-1196G1.	Idler shaft assembly
O1601		Not used.	
O1602	C	HUB, CAM: stainless steel, passivate finish; cylindrical shape, 7/8 in. lg by 7/8 in. od by 1/4 in. id; Hazeltine Elec (mfr and contr) part 1593-1206P1.	For O698
O1603 thru O1607		Not used.	
O1608	C	EXTENSION SHAFT: stainless steel; 1-7/16 in. lg by 0.249 in. dia over-all; both ends chamfered 1/64 in. by 1/64 in., one end flatted 11/32 in. lg, other end flatted 1/4 in. lg; center drill holes ea end; Hazeltine Elec (mfr and contr) part 1593-1109P2.	Control shaft for O623

TABLE 8-3. MAINTENANCE PARTS LIST — Cont'd.

REF. DESIG.	NOTES	NAME AND DESCRIPTION	LOCATING FUNCTION
O1609		Not used.	
O1610		COUPLING, RIGID, UNIVERSAL: rd end type; annealed stainless steel; 1-1/4 in. lg by 1/2 in. dia over-all; 1/4 in. bore at both ends; two radially tapped holes 90 deg apart at ea end; Hazeltine Elec (mfr and contr) part 1593-1216P2.	Coupling for O1608
O1611	C	PLUNGER, QUICK RELEASE: steel, Du-lite finish; approx 9 lb end pressure; cylindrical shape; approx 5/16 in. dia by 1-3/16 in. lg over-all; mounted by external thd 5/16 in.-18 NC-2 by 1 in. lg; Ulier Mfg Co (mfr) item S-56; Hazeltine Elec (contr) part 288-1033P1.	For dial N604
O1612	C	SHIELD, LIGHT, ELECTROSTATIC: aluminum alloy; 10-15/16 in. dia by 9/16 in. h over-all; Hazeltine Elec (mfr and contr) part FP-1929.	Shield for cathode ray tube
R601	B	RESISTOR, FIXED, COMPOSITION: 330 ohms, ±5%; 1/2 w; F characteristic; body 0.416 in. max lg by 0.161 in. max od; insulated; Spec MIL-R-11A, MIL type RC20BF331J; Hazeltine Elec (contr) part 280-1015P55.	IFF video terminating resistor
R602		RESISTOR, FIXED, COMPOSITION: 15,000 ohms, ±5%, 1 w; F characteristic; body dim. 0.760 in. max lg by 0.624 in. max od; insulated; Spec MIL-R-11A, MIL type RC30BF153J; Hazeltine Elec (contr) part 280-1002P115; (same as R429).	MTI range gate control
R603	B	RESISTOR, VARIABLE: composition element; 1 section, 25,000 ohms, ±10%; 2 w nom power rating; std A taper; metal case, enclosed, 1-3/32 in. dia by 21/32 in. deep; single shaft, 1/4 in. dia, 7/8 in. lg from mtg surface; Spec MIL-R-94A, MIL type RV4ATFD253A; Hazeltine Elec (contr) part 240-1003P15.	MTI range gate control
R604		RESISTOR, FIXED, COMPOSITION: 220 ohms, ±5%; 1/2 w, F characteristic; body 0.416 in. max lg by 0.161 in. max od; insulated; Spec MIL-R-11A, MIL type RC20BF221J; Hazeltine Elec (contr) part 280-1015P49; (same as R231).	MTI range gate control
R605		RESISTOR, FIXED, FILM: 2500 ohms, ±1%; 1/2 w; 5/8 in. max lg by 13/32 in. max od; Continental Carbon (mfr) type X-1/2; Hazeltine Elec (contr) part 280-1058P81.	Part of voltage divider for meter M601
R606		RESISTOR, FIXED, FILM: 47,000 ohms, ±1%; 1/2 w; 5/8 in. max lg by 13/32 in. max od; Continental Carbon (mfr) type X-1/2; Hazeltine Elec (contr) part 280-1058P80.	Part of voltage divider for meter M601
R607		Same as R606.	Part of voltage divider for meter M601
R608		RESISTOR, VARIABLE: composition element; 1 section, 2500 ohms, ±10%; 2 w nom power rating; std A taper; metal case, enclosed, 1-3/32 in. dia by 21/32 in. deep; single shaft, 1/4 in. dia, 1 in. lg from mtg surface; Hazeltine Elec (mfr and contr) part 240-1004P6.	Receiver gain control
R609		RESISTOR, VARIABLE: wirewound element; 1 section, 70,000 ohms, ±10%; 4 w nom power rating; no taper, a nominally constant rate of change of resistance w/angular shaft rotation; metal case, enclosed, 1.78 in. dia by 0.98 in. deep; single shaft, 1/4 in. dia, 7/8 in. lg from mtg surface; Hazeltine Elec (mfr and contr) part/dwg 1593-1203P2.	Antenna speed control

TABLE 8-3. MAINTENANCE PARTS LIST — Cont'd.

REF. DESIG.	NOTES	NAME AND DESCRIPTION	LOCATING FUNCTION
R610	B	RESISTOR, VARIABLE: composition element; 1 section, 100 ohms, ±10%; 2 w nom power rating; std A taper; metal case, enclosed, 1-3/32 in. dia by 21/32 in. deep; single shaft, 1/4 in. dia, 7/8 in. lg from mtg surface; Spec MIL-R-94A, MIL type RV4ATFD101A; Hazeltine Elec (contr) part 240-1003P1.	IFF video gain control
R611	B	RESISTOR, FIXED, COMPOSITION: 47,000 ohms, ±5%; 1/2 w; F characteristic; body 0.416 in. max lg by 0.161 in. max od; insulated; Spec MIL-R-11A, MIL type RC20BF473J; Hazeltine Elec (contr) part 280-1015P133; (same as R111).	Grid return for V601
R612		Same as R604.	Cathode for V601
R613	B	RESISTOR, FIXED, COMPOSITION: 150,000 ohms, ±5%; 1 w; F characteristic; body 0.760 in. max lg by 0.264 in. max od; insulated; Spec MIL-R-11A, MIL type RC30BF154J; Hazeltine Elec (contr) part 280-1002P151; (same as R102).	Screen for V601
R614	B	RESISTOR, FIXED, COMPOSITION: 680,000 ohms, ±5%; 1/2 w; F characteristic; body 0.416 in. max lg by 0.161 in. max od; insulated; Spec MIL-R-11A, MIL type RC20BF684J; Hazeltine Elec (contr) part 280-1015P175.	Grid return for V602
R615		Same as R612.	Cathode for V602
R616	B	RESISTOR, FIXED, COMPOSITION: 4700 ohms, ±5%; 1 w; F characteristic; body 0.760 in. max lg by 0.264 in. max od; insulated; Spec MIL-R-11A, MIL type RC30BF472J; Hazeltine Elec (contr) part 280-1002P97; (same as R112).	Plate load for V601 and V602
R617		Same as R616.	Plate load for V601 and V602
R618	B	RESISTOR, FIXED, COMPOSITION: 100,000 ohms, ±5%; 1 w; F characteristic; body 0.760 in. max lg by 0.264 in. max od; insulated; Spec MIL-R-11A, MIL type RC30BF104J; Hazeltine Elec (contr) part 280-1002P145; (same as R401).	Screen for B602
R619	B	RESISTOR, FIXED, COMPOSITION: 330,000 ohms, ±5%; 1 w; F characteristic; body 0.760 in. max lg by 0.264 in. max od; insulated; Spec MIL-R-11A, MIL type RC30BF334J; Hazeltine Elec (contr) part 280-1002P163; (same as R113).	Part of voltage divider for V603A grid
R620	B	RESISTOR, FIXED, COMPOSITION: 22,000 ohms, ±5%; 1 w; F characteristic; body 0.760 in. max lg by 0.264 in. max od; insulated; Spec MIL-R-11A, MIL type RC30BF223J; Hazeltine Elec (contr) part 280-1002P121; (same as R434).	Plate load for V603A
R621		Same as R620.	Plate load for V603B
R622		Same as R620.	Plate load for V603B
R623	B	RESISTOR, FIXED, COMPOSITION: 68,000 ohms, ±5%; 1/2 w; F characteristic; body 0.416 in. max lg by 0.161 in. max od; insulated; Spec MIL-R-11A, MIL type RC20BF683J; Hazeltine Elec (contr) part 280-1015P139; (same as R130).	Part of voltage divider for V603A grid

TABLE 8-3. MAINTENANCE PARTS LIST — Cont'd.

REF. DESIG.	NOTES	NAME AND DESCRIPTION	LOCATING FUNCTION
R624		Same as R620.	Cathode for V603A and V603B
R625		Same as R620.	Cathode for V603A and V603B
R626	B	RESISTOR, VARIABLE: composition element; 1 section, 2.5 meg, ±20%; 2 w nom power rating; std A taper; metal case, enclosed, 1-3/32 in. dia by 21/32 in. deep; single shaft, 1/4 in. dia, 7/8 in. lg from mtg surface; Spec MIL-R-94A, MIL type RV4ATSD255B; Hazeltine Elec (contr) part 240-1004P27.	PPI gate length adjustment
R627		RESISTOR, FIXED, FILM: 2.25 meg, ±5%; 1/2 w; metal film; -0.050% to 0.080% of total resistance per deg C; 5/8 in. lg by 9/32 in. dia; Continental Carbon (mfr) type X-1/2; Hazeltine Elec (contr) part 280-1058P34.	Grid return (with R626 for V603B)
R628		RESISTOR, FIXED, COMPOSITION: 47,000 ohms, ±5%; 1 w; F characteristic; body 0.760 in. max lg by 0.264 in. max od; insulated; Spec MIL-R-11A, MIL type RC30BF473J; Hazeltine Elec (contr) part 280-1002P133.	Part of voltage divider for clamper diode V604A
R629		Same as R628.	Part of voltage divider for clamper diode V604A
R630		Same as R628.	Part of voltage divider for clamper diode V604A
R631		Same as R628.	Part of voltage divider for clamper diode V604A
R632		Same as R602.	Part of voltage divider for clamper diode V604A
R633	B	RESISTOR, FIXED, COMPOSITION: 2.2 meg, ±5%; 1/2 w; F characteristic; body 0.416 in. max lg by 0.161 in. max od; insulated; Spec MIL-R-11A, MIL type RC20BF225J; Hazeltine Elec (contr) part 280-1015P193.	Grid return for V605
R634		RESISTOR, FIXED, COMPOSITION: 1.8 megohms, ±5%; 1/2 w; F characteristic; 0.416 in. max lg by 0.161 in. max dia; Spec MIL-R-11A; MIL type RC20BF185J; Hazeltine Elec (contr) part 280-1015P190.	Charging for PPI sweep capacitor
R635		Same as R613.	Screen for V605
R636		Same as R613.	Screen for V605
R637		Same as R613.	Screen for V605
R638	B	RESISTOR, FIXED, COMPOSITION: 33,000 ohms, ±5%; 1/2 w; F characteristic; body 0.416 in. max lg by 0.161 in. max od; insulated; Spec MIL-R-11A, MIL type RC20BF333J; Hazeltine Elec (contr) part 280-1015P127; (same as R133).	Plate load for V606A

TABLE 8-3. MAINTENANCE PARTS LIST—Cont'd.

REF. DESIG.	NOTES	NAME AND DESCRIPTION	LOCATING FUNCTION
R639	B	RESISTOR, FIXED, COMPOSITION: 100,000 ohms, ±5%; 1/2 w; F characteristic; body 0.416 in. max lg by 0.161 in. max od; insulated; Spec MIL-R-11A, MIL type RC20BF104J; Hazeltine Elec (contr) part 280-1015P145; (same as R312).	Plate decoupling for V606B
R640	B	RESISTOR, FIXED, COMPOSITION: 220,000 ohms, ±5%; 1/2 w; F characteristic; body 0.416 in. max lg by 0.161 in. max od; insulated; Spec MIL-R-11A, MIL type RC20BF224J; Hazeltine Elec (contr) part 280-1015P157.	Plate load for V606B
R641	B	RESISTOR, FIXED, COMPOSITION: 3300 ohms, ±5%; 1/2 w; F characteristic; body 0.416 in. max lg by 0.161 in. max od; insulated; Spec MIL-R-11A, MIL type RC20BF332J; Hazeltine Elec (contr) part 280-1015P91; (same as R307).	Cathode for V606A
R642	B	RESISTOR, FIXED, COMPOSITION: 2200 ohms, ±5%; 1/2 w; F characteristic; body 0.416 in. max lg by 0.161 in. max od; insulated; Spec MIL-R-11A, MIL type RC20BF222J; Hazeltine Elec (contr) part 280-1015P85; (same as R228).	Cathode for V606B
R643		Same as R614.	Grid return for V606B
R644	B	RESISTOR, FIXED, COMPOSITION: 15,000 ohms, ±5%; 1/2 w; F characteristic; body 0.416 in. max lg by 0.161 in. max od; insulated; Spec MIL-R-11A, MIL type RC20BF153J; Hazeltine Elec (contr) part 280-1015P115.	Voltage divider for V607A
R645		Same as R644.	Voltage divider for V607A
R646		Same as R620.	Voltage divider for V607A
R647	B	RESISTOR, FIXED, COMPOSITION: 330,000 ohms, ±5%; 1/2 w; F characteristic; body 0.416 in. max lg by 0.161 in. max od; insulated; Spec MIL-R-11A, MIL type RC20BF334J; Hazeltine Elec (contr) part 280-1015P163.	Grid return for V608
R648	B	RESISTOR, FIXED, COMPOSITION: 680 ohms, ±5%; 1 w; F characteristic; body 0.760 in. max lg by 0.264 in. max od, insulated; Spec MIL-R-11A, MIL type RC30BF681J; Hazeltine Elec (contr) part 280-1002P67; (same as R154).	Part of cathode for V608
R649		Same as R648.	Part of cathode for V608
R650		Same as R154.	Part of cathode for V608
R651	B	RESISTOR, VARIABLE: composition element; 1 section, 250 ohms, ±10%; 2 w nom power rating; std A taper; metal case, enclosed, 1-3/32 in. dia by 21/32 in. deep; single shaft, 1/4 in. dia, 7/8 in. lg from mtg surface; Spec MIL-R-94A, MIL type RV4ATFD251A; Hazeltine Elec (contr) part 240-1003P3.	Part of V608 cathode (adjusts PPI sweep length)
R652	B	RESISTOR, FIXED, COMPOSITION: 4700 ohms, ±5%; 1/2 w; F characteristic; body 0.416 in. max lg by 0.161 in. max od; insulated; Spec MIL-R-11A, MIL type RC20BF472J; Hazeltine Elec (contr) part 280-1015P97; (same as R131).	Compensating PPI versus intensity

TABLE 8-3. MAINTENANCE PARTS LIST — Cont'd.

REF. DESIG.	NOTES	NAME AND DESCRIPTION	LOCATING FUNCTION
R653	B	RESISTOR, FIXED, COMPOSITION: 10,000 ohms, ±5%; 1/2 w; F characteristic; body 0.416 in. max lg by 0.161 in. max od; insulated; Spec MIL-R-11A, MIL type RC20BF103J; Hazeltine Elec (contr) part 280-1015P109; (same as R109).	Compensating PPI versus intensity
R654		Same as R644.	Compensating PPI versus intensity
R655	B	RESISTOR, FIXED, COMPOSITION: 470,000 ohms, ±5%; 1/2 w; F characteristic; body 0.416 in. max lg by 0.161 in. max od; insulated; Spec MIL-R-11A, MIL type RC20BF474J; Hazeltine Elec (contr) part 280-1015P169; (same as R132).	PPI gate voltage divider
R656		Same as R647.	PPI gate voltage divider
R657	B	RESISTOR, FIXED, COMPOSITION: 10,000 ohms, ±5%; 1 w; F characteristic; body 0.760 in. max lg by 0.264 in. max od; insulated; Spec MIL-R-11A, MIL type RC30BF103J; Hazeltine Elec (contr) part 280-1002P109; (same as R118).	Damping for L601
R658		Same as R655.	Cathode for V609
R659		Same as R603.	PPI intensity control
R660		RESISTOR, VARIABLE: composition element; 2 sections, 25,000 ohms, ±10% ea section; 2 w nom power rating; std A taper; metal case, enclosed; 1-3/32 in. dia by 1-5/16 in. deep; single shaft, 1/4 in. dia, 7/8 in. lg from mtg surface; Hazeltine Elec (mfr and contr) part 240-1020P5.	PPI coarse intensity control
R661		Same as R618.	Forms voltage divider with R659 and R660
R662		RESISTOR, VARIABLE: wirewound element; 1 section, 25,000 ohms, ±10%; 4 w nom power rating; std A taper; metal case, enclosed; 1-25/32 in. dia by 0.98 in. deep; single shaft, 1/4 in. dia, 7/8 in. lg from mtg surface; Hazeltine Elec (mfr and contr) part 240-1015P3.	PPI centering control
R663	B	RESISTOR, FIXED, WIREWOUND: non-inductive winding; 3100 ohms, ±5%; 18 w; 275 deg C max continuous operating temp, 25 deg C ambient temp; 3 in. lg by 19/32 in. max od; resistant to humidity; 2 radial tab terminals 21/64 in. lg by 11/64 in. min to 21/64 in. max w; Spec MIL-R-26B, MIL type RW33G312; Hazeltine Elec (contr) part 280-1008P71.	Part of focusing and centering network
R664		Same as R663.	Part of focusing and centering network
R665		Same as R662.	PPI centering control
R666		Same as R632.	Screen for V610
R667		Same as R632.	Screen for V610
R668		Same as R632.	Screen for V610
R669		Same as R632.	Screen for V610

TABLE 8-3. MAINTENANCE PARTS LIST—Cont'd.

REF. DESIG.	NOTES	NAME AND DESCRIPTION	LOCATING FUNCTION
R670	B	RESISTOR, FIXED, COMPOSITION: 10 ohms, ±5%; 1/2 w; F characteristic; body 0.416 in. max lg by 0.161 in. max od; insulated; Spec MIL-R-11A, MIL type RC20BF100J; Hazeltine Elec (contr) part 280-1015P1; (same as R304).	Cathode for V610
R671		RESISTOR, VARIABLE: composition element; 1 section, 500 ohms, ±10%; 2 w nom power rating; std A taper; metal case, enclosed; 1-5/32 in. dia by 21/32 in. deep; single shaft, 1/4 in. dia, 7/8 in. lg from mtg surface; Spec MIL-R-94A, MIL type RV4ATFD501A; Hazeltine Elec (contr) part 240-1103P5.	Cathode for V610 (adjust PPI focus)
R672		Same as R652.	Cathode for V611
R673		Same as R655.	Decoupling for 1st anode of V609
R674		Same as R642.	Video limiting for anti-jam network
R675	B	RESISTOR, FIXED, COMPOSITION: 33,000 ohms, ±5%; 1 w; F characteristic; body 0.760 in. max lg by 0.264 in. max od; insulated; Spec MIL-R-11A, MIL type RC30BF333J; Hazeltine Elec (contr) part 280-1002P127; (same as R351).	Plate decoupling for V611
R676		Same as R675.	Plate decoupling for V611
R677		Not used.	
R678		Same as R616.	Plate load for V611
R679		Same as R614.	Grid return for V612A
R680	B	RESISTOR, FIXED, COMPOSITION: 68 ohms, ±5%; 1/2 w; F characteristic; body 0.416 in. max lg by 0.161 in. max od; insulated; Spec MIL-R-11A, MIL type RC20BF680J; Hazeltine Elec (contr) part 280-1015P31.	Trigger voltage divider
R681		Same as R670.	Trigger voltage divider
R682	B	RESISTOR, VARIABLE: composition element; 1 section, 10,000 ohms, ±10%; 2 w nom power rating; std A taper; metal case, enclosed; 1-3/32 in. dia by 21/32 in. deep; single shaft, 1/4 in. dia, 7/8 in. lg from mtg surface; Spec MIL-R-94A, MIL type RV4ATFD103A; Hazeltine Elec (contr) part 240-1003P13.	PPI video gain control, part of cathode for V612A
R683		Same as R603.	"A" video gain control, V612A cathode resistance
R684	B	RESISTOR, FIXED, COMPOSITION: 1000 ohms, ±5%; 1/2 w; F characteristic; body 0.416 in. max lg by 0.161 in. max od; insulated; Spec MIL-R-11A, MIL type RC20BF102J; Hazeltine Elec (contr) part 280-1015P73; (same as R303).	Strobe marker voltage dropping
R685		Same as R671.	Strobe intensity circuit control in plate of V613B

TABLE 8-3. MAINTENANCE PARTS LIST — Cont'd.

REF. DESIG.	NOTES	NAME AND DESCRIPTION	LOCATING FUNCTION
R686		Same as R623.	Grid return for V613A
R687		Same as R653.	Voltage divider for V613 grid bias
R688		Same as R628.	Part of voltage divider for clamper diode V604A
R689		Same as R619.	Voltage divider for V614A grid
R690		Same as R623.	Voltage divider for V614A grid
R691		Same as R603.	Part of plate load for V614A
R692		Same as R620.	Part of plate load for V614A
R693		Same as R620.	Load for V614B
R694		Same as R620.	Load for V614B
R695		Same as R620.	Load for V614B
R696		Same as R620.	Load for V614B
R697		RESISTOR, FIXED, FILM: 3.5 meg, ±5%; 1/2 w; metal film; -0.050% to -0.080% of total resistance per deg C; 5/8 in. lg by 9/32 in. dia; Continental Carbon (mfr) type X-1/2; Hazeltine Elec (contr) part 280-1058P35.	Grid return for V614B
R698		Same as R620.	Cathode for V614A and V614B
R699		Same as R620.	Cathode for V614A and V614B
R1601	B	RESISTOR, FIXED, COMPOSITION: 1500 ohms, ±5%; 1 w; F characteristic; body 0.760 in. max lg by 0.264 in. max od; insulated; Spec MIL-R-11A, MIL type RC30BF152J; Hazeltine Elec (contr) part 280-1002P79.	B+ decoupling for marker circuits
R1602		Same as R1601.	B+ decoupling for marker circuits
R1603		Same as R1601.	B+ decoupling for marker circuits
R1604		Same as R1601.	B+ decoupling for marker circuits
R1605	B	RESISTOR, FIXED, COMPOSITION: 1.0 meg, ±5%; 1/2 w; F characteristic; body 0.416 in. max lg by 0.161 in. max od; insulated; Spec MIL-R-11A, MIL type RC20BF105J; Hazeltine Elec (contr) part 280-1015P181; (same as R106).	Grid return for V615A

TABLE 8-3. MAINTENANCE PARTS LIST—Cont'd.

REF. DESIG.	NOTES	NAME AND DESCRIPTION	LOCATING FUNCTION
R1606		Same as R632.	Plate load for V615A
R1607		Same as R632.	Plate load for V615A
R1608		Same as R632.	Plate load for V615A
R1609		Same as R632.	Plate load for V615A
R1610		Same as R684.	Cathode for V615A
R1611	B	RESISTOR, FIXED, COMPOSITION: 22,000 ohms, ±5%; 1/2 w; F characteristic; body 0.416 in. max lg by 0.161 in. max od; insulated; Spec MIL-R-11A, MIL type RC20BF223J; Hazeltine Elec (contr) part 280-1015P121; (same as R128).	Cathode for V615B
R1612		Same as R1611.	Limiting for V616A
R1613		Same as R641.	Plate load for V616A
R1614		Same as R641.	Cathode for V616A and V616B
R1615		Same as R647.	Grid return for V616B
R1616		Same as R684.	PPI marker voltage dropping
R1617		Same as R651.	PPI marker intensity control
R1618		RESISTOR, VARIABLE: composition element; 1 section, 500,000 ohms, ±10%; 2 w nom power rating; std A taper; metal case, enclosed; 1-3/32 in. dia by 21/32 in. deep; single shaft, 1/4 in. dia, 7/8 in. lg from mtg surface; Spec MIL-R-94A, MIL type RV4ATSD504A; Hazeltine Elec (contr) part 240-1004P23; (same as R110).	Blocking oscillator count down adjustment
R1619		Same as R655.	Part of grid return for blocking oscillator count down
R1620	B	RESISTOR, FIXED, COMPOSITION: 1500 ohms, ±5%; 1/2 w; F characteristic; body 0.416 in. max lg by 0.161 in. max od; insulated; Spec MIL-R-11A, MIL type RC20BF152J; Hazeltine Elec (contr) part 280-1015P79; (same as R120).	"A" marker voltage dropping
R1621		Same as R680.	Cathode for V617A
R1622		Same as R653.	Voltage divider for blocking oscillator grid
R1623		Same as R628.	Voltage divider for blocking oscillator grid
R1624		Same as R628.	Voltage divider for clamping diode V618A
R1625		Same as R644.	Voltage divider for clamping diode V618A

TABLE 8-3. MAINTENANCE PARTS LIST — Cont'd.

REF. DESIG.	NOTES	NAME AND DESCRIPTION	LOCATING FUNCTION
R1626		Same as R642.	Cathode for V617B
R1627		Same as R680.	Cathode for V618B
R1628		Same as R652.	"A" marker voltage dropping
R1629		Same as R651.	PPI marker intensity control
R1630		Same as R647.	Part of grid return for blocking oscillator count down
R1631		Not used.	
R1632		Same as R684.	PPI marker voltage dropping
R1633	B	RESISTOR, FIXED, COMPOSITION: 180 ohms, ±5%; 1/2 w; F characteristic; body 0.416 in. max lg by 0.161 in. max od; insulated; Spec MIL-R-11A, MIL type RC20BF181J; Hazeltine Elec (contr) part 280-1015P46.	PPI marker mixing
R1634		Same as R644.	"A" marker mixing
R1635		Same as R614.	Grid return for V619A
R1636	B	RESISTOR, FIXED, COMPOSITION: 6800 ohms, ±5%; 1 w; F characteristic; body 0.760 in. max lg by 0.264 in. max od; insulated; Spec MIL-R-11A, MIL type RC30BF682J; Hazeltine Elec (contr) part 280-1002P103; (same as R329).	Plate load for V619A and V619B
R1637		Same as R653.	Grid return for V619B
R1638		Same as R1620.	Cathode for V619A and V619B
R1639	B	RESISTOR, FIXED, COMPOSITION: 6800 ohms, ±5%; 1/2 w; F characteristic; body 0.416 in. max lg by 0.161 in. max od; insulated; Spec MIL-R-11A, MIL type RC20BF682J; Hazeltine Elec (contr) part 280-1015P103.	Attenuator
R1640		Same as R614.	Grid return for V612B
R1641	B	RESISTOR, FIXED, COMPOSITION: 470 ohms, ±5%; 1/2 w; F characteristic; body 0.416 in. max lg by 0.161 in. max od; insulated; Spec MIL-R-11A, MIL type RC20BF471J; Hazeltine Elec (contr) part 280-1015P61; (same as R459).	Cathode for V612B
R1642		Same as R632.	Plate decoupling for V619A, V619B and V612B
R1643		Same as R632.	Plate decoupling for V619A, V619B and V612B

TABLE 8-3. MAINTENANCE PARTS LIST — Cont'd.

REF. DESIG.	NOTES	NAME AND DESCRIPTION	LOCATING FUNCTION
R1644		Same as R632.	Plate load for V612B
R1645		Same as R657.	Plate load for V612B
R1646		Same as R632.	Plate decoupling for V619A, V619B and V612B
R1647		Same as R619.	Voltage divides for V621A grid
R1648		Same as R620.	Plate load for V621A
R1649		Same as R618.	Plate load for V621B
R1650		Same as R618.	Plate load for V621B
R1651		Same as R618.	Plate load for V621B
R1652		Same as R652.	Plate coupling for V621A and V621B
R1653		Same as R611.	Voltage divides for V621A grid
R1654		Same as R620.	Part of cathode for V621 and V621B
R1655		Same as R682.	Plate load of V621A and strobe limit adjustment
R1656		Same as R620.	Part of cathode for V621A and V621B
R1657		RESISTOR, VARIABLE: composition element; 1 section, 2.5 meg, ±20%; 2 w nom power rating; std A taper; metal case, enclosed; 1-3/32 in. dia by 21/32 in. deep; single shaft, 1/4 in. dia, 7/8 in. lg from mtg surface; Spec MIL-R-94A, MIL type RV4ATFD255B; Hazeltine Elec (contr) part 240-1003P27.	Range strobe position control
R1658		Same as R655.	Voltage divider for V621B grid circuit
R1659		Same as R655.	Voltage divider for V611B grid circuit
R1660		Same as R653.	Plate load for V622B
R1661		Same as R1639.	Plate load for V622B
R1662		Same as R620.	Plate load for V622B
R1663		Same as R620.	Plate load for V622B
R1664		Same as R619.	Voltage divider for V622A grid

TABLE 8-3. MAINTENANCE PARTS LIST — Cont'd.

REF. DESIG.	NOTES	NAME AND DESCRIPTION	LOCATING FUNCTION
R1665		Same as R620.	Cathode for V622A and V622B
R1666		Same as R620.	Cathode for V622A and V622B
R1667		Same as R623.	Voltage divider for V622A grid
R1668		Same as R620.	Plate load for V622A
R1669		Same as R626.	"A" gate length adjustment
R1670		Same as R627.	Part of grid return for V622B
R1671		Same as R628.	Voltage divider for clamper diode V604B
R1672		Same as R628.	Voltage divider for clamper diode V604B
R1673		Same as R628.	Voltage divider for clamper diode V604B
R1674		Same as R628.	Voltage divider for clamper diode V604B
R1675		Same as R632.	Voltage divider for clamper diode V604B
R1676		Same as R1657.	"A" sweep slope control
R1677	B	RESISTOR, FIXED, COMPOSITION: 3.3 meg, ±5%; 1/2 w; F characteristic; body 0.416 in. max lg by 0.161 in. max od; insulated; Spec MIL-R-11A, MIL type RC20BF335J; Hazeltine Elec (contr) part 280-1015P199.	Part of "A" sweep cap charging
R1678		Same as R633.	Grid return for V623
R1679		Same as R613.	Screen for V623
R1680		Same as R613.	Screen for V623
R1681		Same as R613.	Screen for V623
R1682		Same as R640.	Plate load for V624A
R1683	B	RESISTOR, FIXED, COMPOSITION: 220,000 ohms, ±5%; 1 w; F characteristic; body 0.760 in. max lg by 0.264 in. max od; insulated; Spec MIL-R-11A, MIL type RC30BF224J; Hazeltine Elec (contr) part 280-1002P157; (same as R127).	Plate load for V624A
R1684		Same as R1639.	Cathode degeneration for V624B
R1685		Same as R640.	"Constant current" cathode for V624A and V624B

TABLE 8-3. MAINTENANCE PARTS LIST — Cont'd.

REF. DESIG.	NOTES	NAME AND DESCRIPTION	LOCATING FUNCTION
R1686		Same as R647.	"Constant current" cathode for V624A and V624B
R1687		Same as R603.	"A" horizontal centering control
R1688		Same as R619.	Part of voltage divider for V624B grid
R1689		RESISTOR, VARIABLE: composition element; 1 section, 250,000 ohms, ±10%; 2 w nom power rating; std A taper; metal case, enclosed; 1-3/32 in. dia by 21/32 in. deep; single shaft, 1/4 in. dia, 7/8 in. lg from mtg surface; Spec MIL-R-94A, MIL type RV4ATFD254A; Hazeltine Elec (contr) part 240-1003P21.	"A" astigmatism control
R1690	B	RESISTOR, FIXED, COMPOSITION: 150,000 ohms, ±5%; 1/2 w; F characteristic; body 0.416 in. max lg by 0.161 in. max od; insulated; Spec MIL-R-11A, MIL type RC20BF154J; Hazeltine Elec (contr) part 280-1015P151.	Part of voltage divider for V625 first anode
R1691	B	RESISTOR, FIXED, COMPOSITION: 1.5 meg, ±5%; 1/2 w; F characteristic; body 0.416 in. max lg by 0.161 in. max od; insulated; Spec MIL-R-11A, MIL type RC20BF155J; Hazeltine Elec (contr) part 280-1015P187; (same as R107).	Grid return for V625
R1692		Same as R611.	Part of -1500 v voltage divider
R1693		RESISTOR, VARIABLE: composition element; 1 section, 250,000 ohms, ±10%; 2 w nom power rating; std A taper; metal case, enclosed; 1-3/32 in. dia by 21/32 in. deep; single shaft, 1/4 in. dia, 1-3/4 in. lg from mtg surface; Hazeltine Elec (mfr and contr) part 240-1069P1.	"A" intensity control -1500 v voltage divider
R1694		Same as R647.	-1500 v voltage divider
R1695		Same as R647.	-1500 v voltage divider
R1696		RESISTOR, VARIABLE: composition element; 1 section, 500,000 ohms, ±10%; 2 w nom power rating; std A taper; metal case, enclosed, 1-3/32 in. dia by 21/32 in. deep; single shaft, 1/4 in. dia, 1-3/4 in. lg from mtg surface; Hazeltine Elec (mfr and contr) part 240-1069P2.	Focus control for V625 part of -1500 v voltage divider
R1697		RESISTOR, FIXED, COMPOSITION: 680,000 ohms, ±5%; 1 w; F characteristic; Spec MIL-R-11A, MIL type RC30BF684J; Hazeltine Elec (contr) part 280-1002P175; (same as R125).	Part of -1500 v voltage divider
R1698		Same as R1697.	Part of -1500 v voltage divider
R2601	B	RESISTOR, VARIABLE: composition element; 1 section, 100,000 ohms, ±10%; 2 w nom power rating; std A taper; metal case, enclosed, 1-3/32 in. dia by 21/32 in. deep; single shaft, 1/4 in. dia, 7/8 in. lg from mtg surface; Spec MIL-R-94A, MIL type RV4ATFD104A; Hazeltine Elec (contr) part 240-1003P19.	"A" vertical centering control
R2602	B	RESISTOR, FIXED, COMPOSITION: 68,000 ohms, ±5%; 1 w; F characteristic; body 0.760 in. max lg by 0.264 in. max od; insulated; Spec MIL-R-11A, MIL type RC30BF683J; Hazeltine Elec (contr) part 280-1002P139; (same as R415).	Part of voltage divider for vertical deflection plates for V625

TABLE 8-3. MAINTENANCE PARTS LIST — Cont'd.

REF. DESIG.	NOTES	NAME AND DESCRIPTION	LOCATING FUNCTION
R2603		RESISTOR, FIXED, COMPOSITION: 560,000 ohms, ±5%; 1 w; F characteristic; body 0.760 in. max lg by 0.264 in. max od; insulated; Spec MIL-R-11A, MIL type RC30BF564J; Hazeltine Elec (contr) part 280-1002P172.	Voltage divider across +8000 v power supply
R2604		Same as R2603.	Voltage divider across +8000 v power supply
R2605		Same as R2603.	Voltage divider across +8000 v power supply
R2606		Same as R628.	Part of voltage divider for clamper diode V604A
R2607		Same as R614.	Voltage divider across +8000 v power supply
R2608		Same as R614.	Voltage divider across +8000 v power supply
R2609		Same as R614.	Voltage divider across +8000 v power supply
R2610		Same as R614.	Voltage divider across +8000 v power supply
R2611		Same as R614.	Voltage divider across +8000 v power supply
R2612		Same as R614.	Voltage divider across +8000 v power supply
R2613		Same as R614.	Voltage divider across +8000 v power supply
R2614		Same as R628.	Voltage divider across +8000 v power supply
R2615		RESISTOR, FIXED, COMPOSITION: 75,000 ohms, ±5%; 2 w; F characteristic; body 0.760 in. max lg by 0.264 in. max od; insulated; Spec MIL-R-11A, MIL type RC30BF753J; Hazeltine Elec (contr) part 280-1002P141.	Series filter for high voltage power supply
R2616		RESISTOR, FIXED, COMPOSITION: 3.3 meg, ±5%; 1 w; F characteristic; body 0.760 in. max lg by 0.264 in. max od; insulated; Spec MIL-R-11A, MIL type RC30BF335J; Hazeltine Elec (contr) part 280-1002P199.	Series filter for high voltage power supply

TABLE 8-3. MAINTENANCE PARTS LIST — Cont'd.

REF. DESIG.	NOTES	NAME AND DESCRIPTION	LOCATING FUNCTION
R2617	B	RESISTOR, VARIABLE: wirewound element; 1 section, 10 ohms, +15 -10%; 25 w nom power rating; std A taper; metal case, enclosed; 1.68 in. dia by 1.41 in. deep; single shaft, 1/4 in. dia, 1 in. lg from mtg surface; Spec MIL-R-22A, MIL type RP102FE100LK; Hazeltine Elec (contr) part 240-1073P2.	Azimuth scale illumination dimmer
R2618		RESISTOR, VARIABLE: composition element; 1 section, 50,000 ohms, ±10%; 2 w nom power rating; std A taper; metal case, enclosed; 1-3/32 in. dia by 21/32 in. deep; single shaft, 1/4 in. dia, 1 in. lg from mtg surface; Hazeltine Elec (mfr and contr) part 240-1044P9.	MTI balance control
R2619		RESISTOR, VARIABLE: composition element; 1 section, 5000 ohms, ±10%; 2 w nom power rating; std A taper; metal case; enclosed; 21/32 in. h by 1-3/32 in. w excluding shaft and bushing; single shaft; 1/4 in. dia, 7/8 in. lg from mtg surface; Spec MIL-R-94; MIL type RV4ATSD502A; Hazeltine Elec (contr) part 240-1004P11.	Antenna speed set control
R2620	B	RESISTOR, FIXED, COMPOSITION: 180,000 ohms, ±5%; 1/2 w; F characteristic; body 0.416 in. max lg by 0.161 in. max od; insulated; Spec MIL-R-11A, MIL type RC20BF184J; Hazeltine Elec (contr) part 280-1015P154.	Voltage dropping for V1610
R2621		Same as R680.	Parasitic suppressor for V602 grid
R2622	B	RESISTOR, FIXED, COMPOSITION: 680 ohms, ±5%; 1/2 w; F characteristic; body 0.416 in. max lg by 0.161 in. max od; insulated; Spec MIL-R-11A, MIL type RC20BF681J; Hazeltine Elec (contr) part 280-1015P67; (same as R1372).	Plate load for V617A
R2623		Same as R680.	Parasitic suppressor for V624 grid
R2624		Same as R2616.	Divider for +8000 v power supply
R2625		Same as R680.	Parasitic suppressor for V601 grid
R2626		Same as R1641.	Plate load for V618B
R2627		Same as R2618.	MTI amplitude balance
R2628		Same as R628.	Voltage divider across +8000 v power supply
R2629		Same as R614.	Voltage divider across +8000 v power supply
R2630		Same as R614.	Voltage divider across +8000 v power supply
R2631		Same as R614.	Voltage divider across +8000 v power supply

TABLE 8-3. MAINTENANCE PARTS LIST — Cont'd.

REF. DESIG.	NOTES	NAME AND DESCRIPTION	LOCATING FUNCTION
R2632		Same as R614.	Voltage divider across +8000 v power supply
R2633		Same as R614.	Voltage divider across +8000 v power supply
R2634		Same as R614.	Voltage divider across +8000 v power supply
R2635		RESISTOR, FIXED, COMPOSITION: 3600 ohms, ±5%; 1/2 w; F characteristic; 0.415 in. max lg by 0.161 in. max dia; Spec MIL-R-11A; MIL type RC20BF362J; Hazeltine Elec (contr) part 280-1015P93.	Part of PPI sweep timing circuit (grid V606A)
R2636		Same as R2615.	Series filter for HV power supply
R2637		Same as R2615.	Series filter for HV power supply
S601		SWITCH, ROTARY: wafer type; one section; 3 positions, max no. of switch positions possible; non-pile up type contact arrangement; double pole; 3 throws; non-shorting type contacts; 1-1/4 in. lg by 1-5/8 in. w by 1-7/8 in. h; flatted type shaft, 1 in. lg by 1/4 in. dia; Oak Mfg Co (mfr) type HC; Hazeltine Elec (contr) part 1593-1082P1.	System selector control switch
S602		SWITCH, TOGGLE: dpst; 2 positions on, none, off; electrical ratings per MIL Spec below; 1-21/64 in. lg by 49/64 in. w by 1-1/16 in. h overall excluding bushing and handle; bat type handle, 11/16 in. lg excluding lg of bushing; locking action w/keyway; Spec MIL-S-3950, MIL type MS35059-9; Hazeltine Elec (contr) part 228-1002P1; (same as S404).	System power switch
S603		SWITCH, SENSITIVE: spdt, normally closed; electrical ratings, ac, 125 v max, 10 amp for nom load; 1-19/32 in. lg by 1-19/64 in. w by 33/64 in. h excluding actuator; push-pull actuator rod, 0.265 in. from mtg surface to free position of actuator, locking action; Micro Switch (mfr) type 2AC1; Hazeltine Elec (contr) part 228-1038P1.	Interlock switch
S604		SWITCH, TOGGLE: dpdt; 3 positions on, none, on; electrical ratings per MIL Spec below; 1-21/64 in. lg by 49/64 in. w by 1-1/16 in. h overall excluding bushing and handle; bat type handle, 11/16 in. lg excluding lg of bushing; locking action w/keyway; Spec MIL-S-3950, MIL type MS35059-15; Hazeltine Elec (contr) part 228-1002P4; (same as S152).	Meter M601 selector (coho or line voltage)
S605		Not used.	
S606		SWITCH, ROTARY: wafer type; four sections; 4 positions, max no. of switch positions possible; non-pile-up type contact arrangement, 5 moving contacts, 18 fixed contacts, 18 dummy terminals, 5 poles, 4 throws; shorting type contacts; 3-13/16 in. lg by 1-33/64 in. w by 1-7/8 in. h; flatted type shaft, 7/8 in. lg by 0.251 in. dia; Oak Mfg Co (mfr) type HC; Hazeltine Elec (contr) part 1593-1083P1.	Interlock switch
S607		Same as S602.	PPI range

TABLE 8-3. MAINTENANCE PARTS LIST — Cont'd.

REF. DESIG.	NOTES	NAME AND DESCRIPTION	LOCATING FUNCTION
S608		Not used.	
S608A&B		SWITCH, TOGGLE: dpdt; 3 positions, on, off, momentarily on; electrical ratings per MIL Spec below; 1-21/64 in. lg by 49/64 in. w by 1-7/32 in. h over-all excluding bushing and handle; bat type handle, 11/16 in. lg excluding lg of bushing; locking action w/keyway; Spec MIL-S-3950, MIL type MS35059-19; Hazeltine Elec (contr) part 228-1002P8.	Range mark on-off switch
S608C		Same as S608A&B.	Range mark on-off switch
S609		SWITCH, ROTARY: wafer type, five sections; 5 positions, max no. of switch positions possible; non-pile-up type contact arrangement; 6 moving contacts, 22 fixed contacts; 18 dummy terminals, 6 poles, 5 throws; combination shorting and non-shorting type contacts; 4-3/8 in. lg by 1-33/64 in. w by 1-7/8 in. h; flatted type shaft, 7/8 in. lg by 0.251 in. dia; Oak Mfg Co (mfr) type HC; Hazeltine Elec (contr) part 1593-1084P1.	"A" range selector switch
S610		SWITCH, THERMOSTATIC: spst; contacts close on temp increase, 25 deg C to 40 deg C adjustable operating temp range; bi-metal element; 8 amp 125 v ac, 10 amp 30 v dc, 1-1/64 in. lg by 0.345 in. w by 3/4 in. h over-all; Stevens Mfg (mfr) type M; Hazeltine Elec (contr) part 271-1091P3; (same as S154).	High temperature thermostat for B601
S611		SWITCH, THERMOSTATIC: spst; contacts open on temp increase, 0 deg C to +15 deg C adjustable operating temp range; bi-metal element; 8 amp 125 v ac, 10 amp 30 v dc; 1-1/64 in. lg by 0.345 in. w by 3/4 in. h over-all; Stevens Mfg (mfr) type M; Hazeltine Elec (contr) part 271-1091P2; (same as S155).	Low temperature thermostat for HR601
S612		SWITCH, SENSITIVE: spdt, 1 normally open, 1 normally closed; electrical ratings per JAN Spec below; 1-15/16 in. lg by 11/16 in. w by 61/64 in. h excluding actuator; roller leaf spring type actuator; 1-3/16 in. from center of mtg hole to free position of actuator, 0.050 in. differential movement, 0.188 in. pre-travel, 0.063 in. over-travel, 4 to 6 oz operating force, 1/2 oz release force, momentary action; Spec JAN-S-63, JAN type SS05A20; Hazeltine Elec (contr) part 228-1122P1.	Synchro system synchronizing switch
S613		SWITCH, TOGGLE: dpdt; 3 positions, momentarily on, off, momentarily on; electrical ratings per MIL Spec below; 1-21/64 in. lg by 49/64 in. w by 1-7/32 in. h over-all excluding bushing and handle; bat type handle, 11/16 in. lg excluding lg of bushing; locking action w/keyway; Spec MIL-S-3950, MIL type MS35059-18; Hazeltine Elec (contr) part 228-1002P7.	Local oscillator remote tuning switch
S614		Not used.	
S615		SWITCH, PUSH: spst; 115 v ac, 15 amp; momentary action, normally closed; 1-5/32 in. lg by 13/16 in. dia excluding terminals; lever type actuator; Robert H. Hetherington & Sons (mfr) part A402BB4BT; Hazeltine Elec (contr) part 228-1121P2.	Radiation-off push button
S616		SWITCH, PUSH: spst; 115 v ac, 15 amp; momentary action, normally open; 1-5/32 in. lg by 13/16 in. dia excluding terminals; lever type actuator; Robert H. Hetherington & Sons (mfr) part A401BB4BT; Hazeltine Elec (contr) part/dwg 228-1121P1.	Radiation-on push button

TABLE 8-3. MAINTENANCE PARTS LIST — Cont'd.

REF. DESIG.	NOTES	NAME AND DESCRIPTION	LOCATING FUNCTION
S617		Same as S612.	Antenna control switch
S618		Same as S612.	Antenna control switch
T601		TRANSFORMER, PULSE: blocking oscillator type; 5.2 ohms dc resistance between terminals 1 and 8, 5.7 ohms dc resistance between terminals 2 and 7, 2.9 ohms dc resistance between terminals 5 and 6, 3.0 ohms dc resistance between 3 and 4; 800 v rms test; 2-5/32 in. lg by 1-1/2 in. w by 1-13/32 in. h, excluding terminals; Hazeltine Elec (mfr and contr) part TR-1592.	Strobe marking blocking oscillator transformer
T602		Same as T601.	Range mark blocking oscillator transformer
T603		Same as T601.	Range mark blocking oscillator transformer
T604		TRANSFORMER, POWER, STEP-DOWN AND STEP-UP: hermetically sealed metal case; primary 115 v, 400 cycles, single phase; two secondary windings, secondary no. 1, 1.25 v, 0.2 amp, secondary no. 2, 8.8 kv 2 ma dc; test voltage primary 500 v, secondary no. 1, 13.3 kv, secondary no. 2, 3.2 kv; oil cooled; oil filled; 4-1/4 in. lg by 3-3/4 in. w by 5-1/2 in. h, excluding terminals; Hazeltine Elec (mfr and contr) part TR-1565.	-1500 v to +1500 +8 kv power supply
T605		TRANSFORMER, POWER, STEP-DOWN: hermetically sealed; primary 115 v, ±5%, 400 cycles, ±4%, single phase; secondary no. 1, 6.3 v, 15 amp, no. 2, 6.3 v, 0.6 amp, no. 3, 6.3 v, 0.6 amp; rms test voltage primary, 1780 v, secondary no. 1 and 2, 1780 v, no. 3, 2800 v; air cooled; wax filled varnish impregnated; 2-7/8 in. lg by 2-5/8 in. w by 3-7/8 in. h, excluding terminals; Hazeltine Elec (mfr and contr) part 292-1242G1.	Filament power for all unit tubes
TB601 thru TB608		Not used.	
TB609	C	TERMINAL BOARD: nylon base phenolic board; incl 12 stud terminals; w/o barriers; 7 in. lg by 1-5/8 in. w by 3/32 in. h, excluding terminals; Hazeltine Elec (mfr and contr) part A-18874.	Mounts R2607 through R2616, R2628 and R2629
TB610	C	TERMINAL BOARD: nylon base phenolic board; incl 10 stud terminals; w/o barriers; 5-13/16 in. lg by 1-5/8 in. w by 3/32 in. h, excluding terminals; Hazeltine Elec (mfr and contr) part A-18873.	Mounts R2603 through R2606 and R2630 through R2634
TB611	C	TERMINAL BOARD: nylon base phenolic board; incl 2 stud terminals; 1-5/8 in. lg by 1-3/8 in. w by 1/8 in. thk, excluding terminals; Hazeltine Elec (mfr and contr) part 1593-1167G1.	For S610 and S611
TB612	C	TERMINAL BOARD: nylon base phenolic board; w/o terminals and barriers; incl 4 eyelets; 4-1/2 in. lg by 3-3/16 in. w by 3/32 in. h, excluding eyelets; Hazeltine Elec (mfr and contr) part A-18876.	Mounts C665 through C668 and R2624
TB613	A	TERMINAL BOARD: nylon base phenolic board; w/o terminals and barriers; 6-5/16 in. lg by 2-7/8 in. w by 3/16 in. h; Hazeltine Elec (mfr and contr) part 1593-1075P1.	Mounts R662 and R665

TABLE 8-3. MAINTENANCE PARTS LIST — Cont'd.

REF. DESIG.	NOTES	NAME AND DESCRIPTION	LOCATING FUNCTION
TP601		JACK, TIP: 1 contact; 1 connector mating end; 1 female contact; red nylon insulation, type FM-10001; straight shape; 3/4 in. lg by 3/8 in. dia excluding protruding terminal; resistant to corrosion; 0.080 in. dia max size test prod accommodated; single through hole mtg, 1/4-28 NF-2 thd, incl 1/4-28 NF-2 hex mtg nut; Diamond Mfg Co (mfr) part A-10001-1; Hazeltine Elec (contr) part 276-1137G2; (same as TP101).	PPI gate multivibrator test for point V603B plate
TP602		JACK, TIP: 1 contact; 1 connector mating end; 1 female contact; black nylon insulation, type FM-10001; straight shape; 3/4 in. lg by 3/8 in. dia excluding protruding terminal; resistant to corrosion; 0.080 in. dia max size test prod accommodated; single through hole mtg, 1/4-28 NF-2 thd, incl 1/4-28 NF-2 hex mtg nut; Diamond Mfg Co (mfr) part A-10002-1; Hazeltine Elec (contr) part 276-1137G1; (same as TP152).	PPI sweep test point, V608 cathode
TP603		Same as TP602.	PPI sweep test point, V608 grid
TP604		Same as TP602.	Delayed trigger test point, V613A grid
TP605		Same as TP602.	Marker gate test point, V615A grid
TP606		Same as TP602.	Range mark oscillator test point, V615B cathode
TP607		Same as TP602.	Range mark blocking oscillator test point, T602 grid winding
TP608		Same as TP603.	Range mark blocking oscillator test point, T603 grid winding
TP609		Same as TP601.	"A" gate test point, V622B plate
TP610		Same as TP602.	"A" sweep test point, V624A cathode
TP611		Same as TP601.	Test point on -1500 v divider
TP612		Same as TP601.	Test point on +1500 v divider
V601		ELECTRON TUBE: glass envelope; sharp cutoff pentode; Spec MIL-E-1C, MIL type 6AH6; Hazeltine Elec (contr) part 6AH6.	Amplifier for IFF signals and strobe marker
V602		Same as V601.	Amplifier for IFF signals and strobe marker

TABLE 8-3. MAINTENANCE PARTS LIST — Cont'd.

REF. DESIG.	NOTES	NAME AND DESCRIPTION	LOCATING FUNCTION
V603		ELECTRON TUBE: miniature medium mu twin triode; Spec MIL-E-1B, MIL type 5814A; Hazeltine Elec (contr) part 5814A.	PPI gate multivibrator
V604		ELECTRON TUBE: reliable miniature twin diode, receiving; Spec MIL-E-1B, MIL type 5726/6AL5W; Hazeltine Elec (contr) part 5726/6AL5W.	Consists of V604A and V604B
V604A		Part of V604.	Clamper diode for PPI gate multivibrator
V604B		Part of V604.	Clamper diode for "A" gate multivibrator
V605	B	ELECTRON TUBE: glass envelope; sharp cutoff, rf pentode; Spec MIL-E-1C, MIL type 6AU6WA; Hazeltine Elec (contr) part 6AU6WA.	PPI sweep
V606		ELECTRON TUBE: reliable miniature twin triode; Spec MIL-E-1B, MIL type 5751; Hazeltine Elec (contr) part 5751.	PPI sweep
V607		Same as V604; incl V607A and V607B.	Consists of V607A and V607B
V607A		Part of V607; for reference only.	Clamper diode for V608 grid
V607B		Part of V607; for reference only.	Video signal clamper diode for V609
V608		ELECTRON TUBE: glass envelope; receiving beam power amplifier; Spec JAN-1A, JAN type 6L6WGB; Hazeltine Elec (contr) part 6L6WGB.	PPI sweep output amplifier
V609		ELECTRON TUBE: glass envelope; magnetic deflection and focus cathode ray tube; Spec MIL-E-1C, MIL type 10KP7; Hazeltine Elec (contr) part 10KP7.	PPI display tube
V610		ELECTRON TUBE: glass tube; power amplifier pentode; Spec MIL-E-1C, MIL type 6AG7; Hazeltine Elec (contr) part 6AG7; (same as V103).	Current supply for L602
V611		Same as V601.	Input video amplifier
V612		Same as V603.	Consists of V612A and V612B
V612A		Part of V612; for reference only.	Video signal cathode follower
V612B		Part of V612; for reference only.	"A" video output amplifier
V613		Same as V603.	Strobe marker blocking oscillator
V614		Same as V603.	Marker gate multivibrator
V615		Same as V603.	Range mark of clamp and oscillator
V616		Same as V603.	Range mark amplifier

TABLE 8-3. MAINTENANCE PARTS LIST — Cont'd.

REF. DESIG.	NOTES	NAME AND DESCRIPTION	LOCATING FUNCTION
V617		Same as V603.	Consists of V617A and V617B
V617A	E	Part of V617; for reference only.	Range mark blocking oscillator (20 and 40 mile range)
V617B	E	Part of V617; for reference only.	Range mark coupling amp-driving V618B
V618		Same as V603.	Consists of V618A and V618B
V618A	E	Part of V618; for reference only.	Clamper diode for range mark count down oscillator
V618B	E	Part of V618; for reference only.	Range mark blocking oscillator (80 to 160 mile range)
V619		Same as V603.	"A" video signal and range mark amplifier
V620		Same as V604.	Clamper diode for V612B
V621		Same as V603.	Delay multivibration for strobe trigger
V622		Same as V603.	"A" gate multivibrator
V623		Same as V605.	"A" sweep clamper
V624		Same as V606.	"A" sweep output amplifier
V625		ELECTRON TUBE: glass envelope; electrostatic deflection and focus cathode ray tube; Spec MIL-E-1C, MIL type 5CP1A; Hazeltine Elec (contr) part 5CP1A.	"A" display tube
V626		ELECTRON TUBE: glass envelope; half-wave, high vacuum rectifier; Spec MIL-E-1C, MIL type 1B3GT; Hazeltine Elec (contr) part 1B3GT.	High voltage rectifier
XDS601		LAMPHOLDER: miniature bayonet; steel shell; 2-1/16 in. max lg by approx 33/64 in. w by 7/16 in. h, excluding terminals; Dialight Co (mfr) part 706; Hazeltine Elec (contr) part 281-1007P1.	For DS601
XDS602		Same as XDS601.	For DS602
XDS603		Same as XDS601.	For DS603
XDS604		Same as XDS601.	For DS604
XDS605 thru XDS610		Not used.	
XDS611		LAMPHOLDER: brass, black nickel plated body, black phenolic insulation; accommodates single contact bayonet miniature base lamp; 1-5/8 in. lg by 13/16 in. dia over-all; incl steel nut, fibre flat washer and brass lockwasher; Hazeltine Elec (mfr and contr) part 281-1001P1.	For DS611

TABLE 8-3. MAINTENANCE PARTS LIST — Cont'd.

REF. DESIG.	NOTES	NAME AND DESCRIPTION	LOCATING FUNCTION
XI601		Same as XDS601.	For I601
XI602		Same as XDS601.	For I602
XI603		Same as XDS601.	For I603
XI604		Same as XDS601.	For I604
XI605		Same as XDS601.	For I605
XI606		Same as XDS601.	For I606
XI607		Same as XDS601.	For I607
XI608		Same as XDS601.	For I608
XI609		Same as XDS611.	For I609
XI610		Same as XI609.	For I610
XV601	B	SOCKET, ELECTRON TUBE: type E miniature 7 pin contact configuration; no contacts missing; molded construction body, low loss composition; rd shaped plain body accommodation hole required; 1-3/16 in. h by 1-1/8 in. w over-all; two 1/8 in. dia mtg holes spaced 7/8 in. c to c; provisions for mtg electron tube shield provided, bayonet type; electron tube retaining device not incl; Spec JAN-S-28A, JAN type TS102P01; Hazeltine Elec (contr) part TS102P01; (same as XV106).	For V601
XV602		Same as XV601.	For V602
XV603		SOCKET, ELECTRON TUBE: type E noval pin contact configuration; no contacts missing; molded construction body, low loss composition; rd shaped plain body accommodation hole required, 1-3/16 in. h by 1-3/8 in. w over-all, two 1/8 in. dia mtg holes spaced 1-1/8 in. c to c; provisions for mtg electron tube shield are provided, bayonet type; electron tube retaining device not incl; Spec JAN-S-28A, JAN type TS103P01; Hazeltine Elec (contr) part/dwg 282-1002P2; (same as XV105).	For V603
XV604		Same as XV601.	For V604
XV605		Same as XV601.	For V605
XV606		Same as XV603.	For V606
XV607		Same as XV601.	For V607
XV608	B	SOCKET, ELECTRON TUBE: type octal pin contact configuration; no contacts missing; molded construction body, low loss composition; body accommodation hole required, rd shaped plain; 1 in. h by 1-7/8 in. w over-all, two 5/32 in. dia mtg holes spaced 1-1/2 in. c to c; provisions for mtg electron tube shield not provided; electron tube retaining device not incl; Spec JAN-S-28A, JAN type TS101P01; Hazeltine Elec (contr) part TS101P01; (same as XV401).	For V608
XV609		SOCKET, ELECTRON TUBE: 12 pin socket; beryllium copper, silver plated contacts; molded resin inclosed contacts; 47/64 in. h by 1-15/16 in. od; rd shape keyed accommodation hole; Cinch (mfr) part 57C20634; Hazeltine Elec (contr) part SO-1118-1.	For V609

TABLE 8-3. MAINTENANCE PARTS LIST—Cont'd.

REF. DESIG.	NOTES	NAME AND DESCRIPTION	LOCATING FUNCTION
XV610		Same as XV608.	For V610
XV611		Same as XV601.	For V611
XV612		Same as XV603.	For V612
XV613		Same as XV603.	For V613
XV614		Same as XV603.	For V614
XV615		Same as XV603.	For V615
XV616		Same as XV603.	For V616
XV617		Same as XV603.	For V617
XV618		Same as XV603.	For V618
XV619		Same as XV603.	For V619
XV620		Same as XV601.	For V620
XV621		Same as XV603.	For V621
XV622		Same as XV603.	For V622
XV623		Same as XV601.	For V623
XV624		Same as XV603.	For V624
XV625		SOCKET, ELECTRON TUBE: type B diheptal contact configuration; no contacts missing; molded construction, plastic; body accommodation hole required, rd shaped keyed; 1-1/8 in. lg by 2.219 in. dia over-all; retainer ring type mtg; provisions for mtg electron tube shield not provided; electron tube retaining device not incl; Hazeltine Elec (mfr and contr) part 282-1024P1.	Socket for V625
XV626		SOCKET, ELECTRON TUBE: type B octal contact configuration; no contacts missing; molded construction, arc resistant plastic; body accommodation hole required, D-shaped; 2.172 in. lg by 1.678 in. dia excluding mtg flange; two 0.136 in. dia mtg holes spaced 2.031 in. c to c; provisions for mtg electron tube shield provided; force fit type; electron tube retaining device incl; Hazeltine Elec (mfr and contr) part SO-1187.	For V626
Z601		COIL, RADIO FREQUENCY: single pie universal wound; approx 1724 turns no. 38 AWG magnet wire; 34 mh inductance in air w/o core; 39 mh inductance w/core screwed out, 77 mh inductance w/core screwed in; 210 ohms ±10% dc resistance, tapped at 920 turns; Hazeltine Elec (mfr and contr) part 375-1037G1.	5 mile oscillator tank circuit
Z602		FILTER, RADIO INTERFERENCE: 2 amp, 500 v dc, 125 v, 400 cycles per sec; hermetically sealed metal case; 1-13/16 in. lg by 1-1/4 in. w by 7/8 in. h over-all; 2 integral mtg ears ea w/ mtg hole 3/16 in. dia on 2-1/8 in. mtg center; Astron Corp (mfr) part AF-344; Hazeltine Elec (contr) part 363-1097P1.	Interference filter for -150 v line
Z603		Same as Z602.	Interference filter for +130 v line

TABLE 8-3. MAINTENANCE PARTS LIST — Cont'd.

REF. DESIG.	NOTES	NAME AND DESCRIPTION	LOCATING FUNCTION
Z604		Same as Z602.	Interference filter for +450 v line
Z605		Same as Z602.	Interference filter for 400 cycle line
Z606		Same as Z602.	Interference filter for 400 cycle line

TABLE 8-3. MAINTENANCE PARTS LIST — Cont'd.

REF. DESIG.	NOTES	NAME AND DESCRIPTION	LOCATING FUNCTION
701-799 1701-1799 Series	E	BASE, ANTENNA: Army-Navy Base, Antenna AB-498/TPS-1G; Hazeltine Elec (mfr and contr) part 1592-5011; Navy Spec MIL-R-0015895D (SHIPS) and Amendment 2.	
A701	C	HOUSING, GEAR BOX: for gear box; cast aluminum; cylindrical shape, over-all dim. 7-1/4 in. dia by 1.687 in. h, 3-1/4 in. id; eight 11/32 in. dia mtg holes equally spaced on 6-1/2 in. dia bolt circle; four 5/16 in. dia thd holes equally spaced within 4-1/2 in. dia bolt circle; Hazeltine Elec (mfr and contr) part/dwg CS-1721.	For gear box
A702	F	STRAP RETAINING: aluminum; alodine finish; 5/16 in. h from base to inside of arch; 25/32 in. lg of arch, 0.169 in. size of mtg holes, 5/32 in. dia hole in center, 1-3/16 in. distance between mtg hole centers, 0.031 in. thk of material; Hazeltine Elec (mfr and contr) part 1592-1079P1.	Mounts S702
A703 thru A705		Not used.	
A706	F	MOUNTING, CAPACITOR: brass, silver plated; irregular shape; approx 7/8 in. lg by 3/8 in. w by 5/8 in. h over-all; single hole 0.093 in. dia on portion bent at 45 deg angle; cutout 0.327 in. lg by 0.175 in. w; Hazeltine Elec (mfr and contr) part 1592-1129P1.	Mounting for C701 and C702
A707		RETAINER, CAPACITOR: metallic material, finish per Spec MIL-C-25A; 4-7/64 in. lg by 29/32 in. w; incl one mtg stud no. 10-32 NF-2 thd by 5/8 in. lg; Spec MIL-C-25A, type CP07SC3; Hazeltine Elec (contr) part 217-1001P11.	Mounting for C709 and C710
A708	A	INSULATOR, PLATE: nylon base phenolic, Formica YN-25; rectangular; 2-1/2 in. lg by 9/16 in. w by 1/4 in. thk over-all; 2 mtg holes 0.169 in. dia spaced 2 in. c to c; Hazeltine Elec (mfr and contr) part 1592-1130P1.	Terminal mounting for C701 and C702
A709	A	INSULATOR, PLATE: nylon base phenolic, Formica YN-25; rectangular; 2-1/2 in. lg by 9/16 in. w by 1/16 in. thk over-all; 2 mtg holes 0.169 in. dia spaced 2 in. c to c; Hazeltine Elec (mfr and contr) part 1592-1131P1.	Terminal mounting for C701 and C702
A710 thru A715		Not used.	
A716	C	COVER, AMPLIFIER: approx 6-11/16 in. lg by 6-3/16 in. w by 9/32 in. thk over-all; 8 mtg inserts no. 8-32 thd, two on ea side spaced 3 in. c to c; Hazeltine Elec (mfr and contr) part 1592-1127G1.	Servo amplifier cover
A717	F	BRACKET, DOUBLE ANGLE: aluminum, alodine finish; 2-3/4 in. lg by 7/8 in. w by approx 33/64 in. h over-all; two mtg holes 0.196 in. dia spaced 2 in. c to c; Hazeltine Elec (mfr and contr) part 1592-1106P1.	Mounting bracket for O786
A718	C	HOUSING, BEARING, BALL: cast aluminum; 5.1182 in. to 5.1192 in. id housing bore; 7-5/8 in. lg by 7-5/8 in. w by 2 in. h over-all; 4 mtg holes 0.531 in. dia spaced 6-3/8 in. by 6-3/8 in. c to c; and 4 holes 3/8 in.-16 NC-2 thd by 13/16 in. deep evenly spaced on 6.625 in. dia circle; Hazeltine Elec (mfr and contr) part 1592-1090P1.	For O785
A719		Not used.	

TABLE 8-3. MAINTENANCE PARTS LIST — Cont'd.

REF. DESIG.	NOTES	NAME AND DESCRIPTION	LOCATING FUNCTION
A720	F	BRACKET, ANGLE: 0.050 in. thk aluminum per N Spec 47A11, Cond 1/4 H; alodine finish; one leg 1-1/4 in. lg w/0.196 in. w by 0.321 in. lg slot, other leg 7/8 in. lg w/0.219 in. w by 0.438 in. lg mtg hole, 3/4 in. w over-all, "L" shape w/90 deg bend; Hazeltine Elec (mfr and contr) part 1592-1132P1.	Mounting for R719
A721	F	BRACKET, RELAY: stainless steel, passivated finish; 3-33/64 in. lg by 1-1/4 in. w by 3 in. h over-all; 2 mtg holes 0.169 in. dia spaced 2-5/8 in. c to c; incl 2 holes 0.196 in. dia spaced 2-5/8 in. c to c; Hazeltine Elec (mfr and contr) part 1592-1222G1.	Mounting for K705
A722		Not used.	
A723	F	RETAINER, CAPACITOR: stainless steel, passivated finish; 1-1/2 in. lg by 1-1/16 in. w by 3/4 in. h over-all; 2 mtg holes 0.156 in. dia spaced 1-1/8 in. c to c in one leg, 2 mtg holes 3/16 in. dia spaced 1 in. c to c in other leg; incl 25/32 in. dia hole in one leg; Hazeltine Elec (mfr and contr) part 1592-1258G1.	Mounting for C717
A724		Not used.	
A725	C	SUPPORT, ELECTRIC MOTOR: steel; painted finish; cylindrical shape; 14 in. od by 7-1/2 in. deep; four 11/32 in. dia holes equally spaced on 13-1/4 in. dia circle, incl four 5/16 in. dia holes on 5 in. by 4-1/2 in. center in support bracket; Propellair Div of Robbins and Meyers, Inc (mfr) part 82199 mod; Hazeltine Elec (contr) part 1592-1253P1.	For B755 and O1719
A726		HOUSING, BLOWER: aluminum alloy, painted finish; 3-7/16 in. dia by 4-1/8 in. lg over-all; 6 mtg holes 0.161 in. dia spotfaced 5/16 in. dia equally spaced on 3-1/8 in. dia circle, incl 5 vanes equally spaced and 3 holes 0.147 in. dia spotfaced 9/32 in. dia on 1.281 in. dia circle; Hazeltine Elec (mfr and contr) part 1592-1278P1.	For B702
A727		Not used.	
B701		FAN, CENTRIFUGAL: single unit operating on a common shaft; prime mover supplied w/unit, electric motor, 1/400 hp, 115 v ac, 400 cycles, single phase, 6000 rpm; Eastern Air Devices (mfr) part J55 mod; Hazeltine Elec (contr) part 315-1051P1.	Blower motor
B701A		MOTOR, ALTERNATING CURRENT: capacitor start induction motor; 115 v, 400 cycles, single phase, 0.1 amp nom; 1/400 hp, 6000 min rpm, reversible rotation; closed frame; 0 to plus 70 degrees C ambient temp; double flatted shaft; 1-3/4 in. dia by 2-11/16 in. lg, shaft 0.250 in. dia by 3/4 in. lg from mounting surface; 3 wire lead term; fixed mounting base; 3 mounting holes no. 6-32 NC-2 thd on 0.641 in. radius; incl ball bearing, 0.3 μf capacitor required, not furnished; Eastern Air Devices (mfr) part J49A modified; Hazeltine Elec (contr) part 315-1051P2; (p/o B701).	Motor for blower B701
B701B		IMPELLER, FAN, CENTRIFUGAL: curved blade type; steel, cadmium plated; rated 11 cfm at 6000 rpm; rd w/16 blades; 1-1/2 in. dia by 43/64 in. h over-all; 1 center axial mtg hole 0.250 in. dia, 2 radial holes no. 8-32 spaced 90 degrees apart; 1-1/2 in. inlet dia; Eastern Air Devices (mfr) part 2220-1.5C-5; Hazeltine Elec (contr) part 315-1051P3; (p/o B701).	B701 impeller
B701C		HOUSING, IMPELLER FAN: molded phenolic; 2-15/16 in. lg by 2-27/32 in. w by 61/64 in. h over-all; 4 mtg holes no. 6-32 NC-2 thread on irregular mtg/c; clockwise rotation; 1 in. inlet dia; Eastern Air Devices (mfr) part 2200-1.5C-1; Hazeltine Elec (contr) part 315-1051P4.	Housing for B701B

TABLE 8-3. MAINTENANCE PARTS LIST—Cont'd.

REF. DESIG.	NOTES	NAME AND DESCRIPTION	LOCATING FUNCTION
B702		MOTOR, ALTERNATING CURRENT: capacitor start induction type; 115 v ac, 400 cycles, single phase, 0.65 amp, approx 65% power factor; 1/50 hp, single take-off, 6500 rpm, reversible rotation; -54 deg C to +65 deg C ambient; 2-23/32 in. lg excluding shaft by 1-3/4 in. dia, 1/4 in. dia shaft, incl ball bearing; Eastern Air Devices (mfr) part J33D modified; Hazeltine Elec (contr) part 315-1034P2.	Blower motor
B703 thru B750		Not used.	
B751		MOTOR, DIRECT CURRENT: shunt wound type; 230 v ac armature voltage, 95 v dc field voltage; 0.4 hp, 60-1780 rpm armature speed at full load; open-frame; reversible motor; 35 deg C rise for continuous operation; thd shaft, 15/16 in.-24 thd rh, male, 5/8 in. lg, 0.625 in. dia shaft, spur gear; 12-3/4 in. lg excl shaft, rh threaded shaft; thread length 5/8 in.; 6-1/4 in. dia, 6-1/4 in. h, shaft extends 1 in. from end of inclosure; fixed-base mtg; four 13/32 in. dia holes on 5.255 in. by 5.255 in. mtg centers; 3-23/32 in. centers parallel to shaft axis; 6 wire leads; Star Kimble Electric Co (mfr) part/dwg 144-C001; Hazeltine Elec (contr) part MO-1117.	Antenna drive motor
B752		SYNCHRO, TRANSMITTER: 115 v ac rotor voltage, 90 v ac stator voltage, 400 cycles, single phase rotor, three-phase stator; 1/4 in. dia shaft, 0.800 in. lg from housing, thd shaft end; over-all dim. 5.4 in. max lg by 3.100 in. dia; MIL Spec MIL-S-16892, type 31TX4; Ketay Mfg Corp (mfr) type 31TX4; Hazeltine Elec (contr) part 315-1040P2.	24 speed synchro
B753		SYNCHRO, TRANSMITTER: 115 v ac rotor voltage, 90 v ac stator voltage, 60 cycle, single phase; 1/4 in. dia shaft, 51/64 in. lg from housing, thd shaft end; over-all dim. 5-1/4 in. lg by 3-5/8 in. dia; General Electric Co (mfr) type 5G; Hazeltine Elec (contr) part 315-1008P3.	1 speed synchro
B754		Not used.	
B755		MOTOR, ALTERNATING CURRENT: capacitor start induction type; 115 v ac, 400 cycles, single phase, 2.5 amp; 1/15-hp; single take-off, 1700 rpm motor speed, cw rotation looking at load end; -22 deg F to +25 deg F ambient; motor dim., 6-3/8 in. lg excl shaft, 6-5/8 in. dia, 5/8 in. max dia shaft, shaft extends 1-1/2 in. from frame center of shaft 4-1/8 in. from mtg surface; accessories, 1 connector type AN3102C-18-22P, 1 mtg frame w/parts; Eastern Air Devices (mfr) part F14GZL-2; Hazeltine Elec (contr) part 1592-1252P1.	Blower motor
C701		CAPACITOR, FIXED, MICA DIELECTRIC: 600 v dc working, 1000 v peak working, 0.25 μf, ±2%; 2.938 in. lg by 0.9062 in. dia over-all; Hazeltine Elec (mfr and contr) part 235-1120P1.	Grid phase shift forV701
C702		Same as C701.	Grid phase shift for V702
C703	B	CAPACITOR, FIXED, MICA DIELECTRIC: 500 v dc working, 1000 v peak working, 100 μμf, ±10%; 47/64 in. w by 7/16 in. h by 3/16 in. deep; Spec MIL-C-5A, MIL type CM20B101K; Hazeltine Elec (contr) part 235-1005P40.	Grid filter for V701
C704		Same as C703.	Grid filter for V702

TABLE 8-3. MAINTENANCE PARTS LIST — Cont'd.

REF. DESIG.	NOTES	NAME AND DESCRIPTION	LOCATING FUNCTION
C705	B	CAPACITOR, FIXED, PAPER DIELECTRIC: 600 v dc working, 2.0 μf, ±10%, 1.8 μf to 2.4 μf capacity range; metal case, uninsulated, hermetically sealed, case 2 in. deep by 1-1/8 in. h by 2 in. w; Spec MIL-C-25A, MIL type CP53B1EF205K; Hazeltine Elec (contr) part 235-1002P29.	Filter for V703A
C706	B	CAPACITOR, FIXED, PAPER DIELECTRIC: 600 v dc working, 250,000 μμf, ±10%, 225,000 μμf to 300,000 μμf capacity range; metal case, uninsulated, hermetically sealed, case 1 in. deep by 3/4 in. h by 1-13/16 in. w; Spec MIL-C-25A, MIL type CP53B1FF254K; Hazeltine Elec (contr) part 235-1002P13.	Current feedback filter
C707	B	CAPACITOR, FIXED, PAPER DIELECTRIC: 600 v dc working, 0.5 μf, ±10%, 0.45 μf to 0.60 μf capacity range; metal case, uninsulated, hermetically sealed, case 1 in. deep by 1 in. h by 1-13/16 in. w; Spec MIL-C-25A, MIL type CP53B1EF504K; Hazeltine Elec (contr) part 235-1002P19.	Current feedback filter
C708	B	CAPACITOR, FIXED, PAPER DIELECTRIC: 600 v dc working, 250,000 μμf, ±10%, 225,000 μμf to 275,000 μμf capacity range; metal case, uninsulated, hermetically sealed, case 0.766 in. max deep by 1-5/8 in. h by 1-5/16 in. w; Spec MIL-C-25A, MIL type CP63B1EF254K; Hazeltine Elec (contr) part 235-1166P2.	Phase shift for B701
C709		CAPACITOR, FIXED, PAPER DIELECTRIC: 330 v ac working, 15 μf, ±10% tolerance, 13.5 μf to 16.5 μf; metal case, uninsulated, hermetically sealed, 1-3/4 in. deep by 4-1/4 in. h by 3-3/4 in. w; General Electric Co (mfr) part 21F411; Hazeltine Elec (contr) part 235-1063P1.	Filter for B751
C710		Same as C709.	Filter for B751 armature current
C711		CAPACITOR, FIXED, PAPER DIELECTRIC: 400 v dc working, 1.0 μf, ±10%, 900,000 μμf to 1.1 μf capacity range; metal case, uninsulated, hermetically sealed, case 0.766 in. max deep by 2 in. h by 1-5/16 in. w; Spec MIL-C-25A, MIL type CP65B1FE105K; Hazeltine Elec (contr) part 235-1237P1.	B702 phase shifting
C712		Same as C711.	Time delay for V706 limiter
C713	B	CAPACITOR, FIXED, MICA DIELECTRIC: 500 v dc working, 1000 v peak working, 4700 μμf, ±10%; low loss plastic case, case 51/64 in. w by 51/64 in. h by 5/16 in. deep; Spec MIL-C-5A, MIL type CM35B472K; Hazeltine Elec (contr) part 235-1008P58.	Noise filter
C714		Same as C703.	Noise filter
C715		Same as C703.	Noise filter
C716		CAPACITOR, FIXED, PAPER DIELECTRIC: 200 v ac working, 130 v dc working, 250,000 μμf, +20 -10% tolerance, 225,000 μμf to 300,000 μμf capacity range; metal case, uninsulated, hermetically sealed, 3/4 in. dia by 1-13/16 in. lg; Sprague Electric Co (mfr) part P12875; Hazeltine Elec (contr) part 235-1039P2.	Feed-thru noise filter
C717		Same as C716.	
C718 thru C750		Not used.	Feed-thru noise filter

TABLE 8-3. MAINTENANCE PARTS LIST—Cont'd.

REF. DESIG.	NOTES	NAME AND DESCRIPTION	LOCATING FUNCTION
C751		CAPACITOR, FIXED, PAPER DIELECTRIC: 200 v dc working, 130 v ac working, 250,000 μμf, +20 -10% tolerance, 225,000 μμf to 300,000 μμf; metal case, uninsulated, hermetically sealed, 3/4 in. dia by 1-13/16 in. lg; Sprague Electric Co (mfr) part P12875; Hazeltine Elec (contr) part 235-1039P1.	Feed-thru noise filter for B751
C752		Same as C751.	Feed-thru noise filter for B751
C753		CAPACITOR, FIXED, PAPER DIELECTRIC: 330 v ac working, 2 μf, +20 -10% tolerance, 1.8 μf to 2.4 μf; metal case, uninsulated, hermetically sealed, 1-1/16 in. deep, 2-7/8 in. h, 1-13/16 in. w; Sprague Electric Co (mfr) part 31760; Hazeltine Elec (contr) part 235-1231P1.	Blower capacitor for B755
CR701		RECTIFIER, METALLIC: selenium; designed for single phase full-wave bridge; input 121 v rms, single phase; output 96 v dc, 1.6 amp max current, full-wave rectification; 5-5/8 in. lg by 2-3/16 in. w by 2-19/32 in. h; General Electric Corp (mfr) part 6RS25GB5BAH1 Modified; Hazeltine Elec (contr) part 232-1018P1.	Field supply for antenna drive motor
E701		TERMINAL BOARD: plastic board per MIL Spec MIL-P-14A, type MFE; 4 terminals, double screw type; barrier type; 2-3/16 in. lg by 1-1/8 in. w by 1/2 in. h; Howard B Jones (mfr) part 4-141D; Hazeltine Elec (contr) part 247-1015G4.	General purpose
E702 thru E704		Not used.	
E705		SHIELD, ELECTRON TUBE: accommodates RMA tube envelope T5-1/2; straight cylinder shape w/flared end, open top, 1 opening provided specifically for electrode leads; brass; 1-3/8 in. lg by 0.930 in. w across mtg protrusions; mounts directly on tube; Spec JAN-S-28A; JAN type TS102U01; Hazeltine Elec (contr) part 308-1001P1.	Shield for V704 and V705
E706		SHIELD, ELECTRON TUBE: accommodates RMA tube envelope style T-6-1/2, straight cylinder shape w/flared end, open top, 1 opening provided specifically for electrode leads; brass or copper; 1-15/16 in. lg by 1.065 in. w inside mtg bosses; mounts directly on tube; Spec JAN type TS103U02; Hazeltine Elec (contr) part 308-1002P2.	Shield for V703
E707	E	CONTACT, ELECTRICAL: beryllium copper alloy contact, silver plated; 2-5/8 in. lg by 0.238 in. dia; 6-32 thd one end; Hazeltine Elec (mfr and contr) part 1592-1216P1; (p/o RF751).	For RF751
E708	E	CONTACT, ELECTRICAL: beryllium copper contact, silver plated; 1.701 in. lg by 0.763 in. dia; Hazeltine Elec (mfr and contr) part 1592-1215P1; (p/o RF751).	For RF751
E709	E	INSULATOR BUSHING: polystyrene; conductor passage hole 0.124 in. dia; 0.460 in. od by 0.721 in. h over-all; Hazeltine Elec (mfr and contr) part 1592-1180P1; (p/o RF751).	For RF751
E710	E	CONTACT, ELECTRICAL: beryllium copper alloy contact, silver plated; 0.715 in. lg by 0.121 in. dia over-all; Hazeltine Elec (mfr and contr) part 1588-1097P1; (p/o RF751).	For RF751

TABLE 8-3. MAINTENANCE PARTS LIST — Cont'd.

REF. DESIG.	NOTES	NAME AND DESCRIPTION	LOCATING FUNCTION
E711		CLIP, ELECTRICAL: molded black phenolic cap; contacts beryllium copper; cadmium plated; 31/32 in. lg by 13/16 in. od; one clip type terminals; 9/16 in. dia mating contact; incl 15 in. lg no. 18 AWG stranded wire lead w/red neoprene insulation, rated 5000 v; Alden (mfr) part 925L; Hazeltine Elec (contr) part 376-1006P1.	For V701
E712		Same as E711.	For V702
E713		CONTACT, ELECTRICAL: phosphor bronze, silver plated; 2-5/8 in. lg by 5/8 in. dia over-all; Hazeltine Elec (mfr and contr) part 1592-1274P1; (p/o RF754).	Contact for RF754
E714 thru E750		Not used.	
E751		TERMINAL BOARD: plastic board; 4 double screw type terminals; barrier type; over-all dim. excl terminals 3-7/32 in. lg by 1-5/16 in. w by 5/8 in. h; four 0.209 in. dia holes spaced 2-13/16 in. by 1/2 in. mtg centers; H.B. Jones Div of Cinch Mfg Corp (mfr) part 4-142D; Hazeltine Elec (contr) part 247-1016G4.	Terminal strip on B751
E752		TERMINAL BOARD: bakelite; incl 12 terminals, screw type w/internal star washer; barrier type; 6 in. lg by 1-1/8 in. w by 1/2 in. h over-all dim.; two mtg holes ea end, spaced 5-11/16 in. by 27/64 in. c to c; Kulka Elec Mfg Co (mfr) part 601-Z-12-MSI.	Terminal strip for antenna base
E753 thru E756		Not used.	
E757		TERMINAL STUD: conductor connection style no. 64, Ref Dwg Group 21; 21/32 in. lg by 1/4 in. w across hex flats; hexagonal cross-sectional shape, base not insulated from conductor connection; Hazeltine Elec (mfr and contr) part 227-1050P3.	Component connection
E758		Not used.	
E759		BRUSH, ELECTRICAL CONTACT: rectangular shape; carbon; 7/8 in. lg by 1/2 in. dia by 3/8 in. thk; straight contact end and face; straight slotted terminal; 4-7/16 in. lg over-all; Star Kimble Motor Div (mfr) part 54434; Hazeltine Elec (contr) part/dwg BR-1024.	Spare brush for B751
E760	F	INSULATOR, ANGLE BRACKET: for switch sensitive; plastic material; angle shape, 2 in. lg, 1-3/32 in. w, 3/4 in. deep, 1/64 in. thk, 3/32 in. deg of angle; Hazeltine Elec (mfr and contr) part/dwg MS-13404.	For S756
E761		SHIELD, ELECTRON TUBE: accommodates RMA tube envelope style T5-1/2, straight cylinder shape w/flared end open top, 1 opening provided specifically for electrode leads; brass or copper; 1-3/4 in. lg by 0.930 in. w across mtg protrusions; mounts directly on tube; Spec JAN-S-28A; JAN type TS102U02; Hazeltine Elec (contr) part 308-1001P2.	Shield for V706
H701		PACKING, NUT: half-hard brass; cadmium plated, semi-finished; 5/8 in.-20 NS-2; 3/8 in. h over-all; 3/4 in. w across flats; 0.228 in. dia axial hole through center, countersunk 82 degrees to 7/16 in. dia on 1 end; Hazeltine Elec (mfr and contr) part 203-1008P1.	Packing nut for S753

TABLE 8-3. MAINTENANCE PARTS LIST—Cont'd.

REF. DESIG.	NOTES	NAME AND DESCRIPTION	LOCATING FUNCTION
H702	C	STUD, PLAIN: corrosion resisting steel; passivate finish; 10-24 NC-2 thd; 5-1/16 in. thread lg including imperfect threads; 5-1/16 in. lg over-all; Hazeltine Elec (mfr and contr) part 234-1008P6.	Mounting for R719
H703 and H704		Not used.	
H705	C	WASHER, FLAT: disc type; silicone rubber; 3/4 in. od; 0.490 in. diameter hole; 1/32 in. thick; Hazeltine Elec (mfr and contr) part 236-1079P2.	For R719, R727 and R728 mounting
H706		STUFFING TUBE: watertight terminal tube for use w/1/2 in. od tubing; c/o 1 ea body, nut, and synthetic rubber sleeve; brass, zinc plated; assembled 1-1/2 in. lg w/nut shouldered against stop by 7/8 in. w across hexagonal flats, 13/32 in. id at mtg end; mounts by 3/8 in. male pipe thread; Hazeltine Elec (mfr and contr) part 370-1008P16.	Fan drive stuffing tube
H707	C	SCREW, MACHINE: nonmagnetic corrosion resistant steel; flat head, slot drive; 8 in.-32 NC-2 thd; 4-5/8 in. lg; Hazeltine Elec (mfr and contr) part 1592-1266P1.	For mounting R727 and R728
H708	F	STRAP, RETAINING: aluminum; painted finish; 3/16 in. h from base to inside of arch, 3/8 in. inside dia, 5/8 in. over-all w, 1-3/8 in. over-all lg, 0.221 in. size of mtg holes, 1 in. distance between mtg hole centers, 0.122 in. thk of material; Hazeltine Elec (mfr and contr) part 1592-1104P1.	Servo amplifier handle clamp
H709	C	HANDLE, BAIL: handle for servo amplifier chassis; aluminum material, anodize plated; approx 7-7/8 in. lg by 1-5/16 in. w by 3/8 in. thk, 6-9/16 in. lg grip; Hazeltine Elec (mfr and contr) part 1592-1110P1.	Servo amplifier chassis handle
H710		Not used.	
H711		GROMMET, RUBBER: synthetic rubber, MIL-G-3036; 13/16 in. od of flange, 9/16 in. od of groove, 1/8 in. thk of flange, 5/16 in. dia hole, 3/8 in. over-all h, 1/8 in. w of groove; Spec MIL-G-3036, part AN931A5-9; Hazeltine Elec (mfr and contr) part 359-1001P14.	Cable feed-thru
H712		SHAFT LOCK, ELECTRONIC COMPONENT: for variable resistor; c/o bright nickel plated brass bushing and lock nut; 1/2 in. lg by 1/2 in. w across hex flats over-all; 3/8 in.-32 NEF-2 mtg thd on bushing; incl compression nut 7/32 in. thk by 7/16 in. across hex flats; for 1/4 in. dia shaft; James Millen Mfg Co (mfr) part 10061; Hazeltine Elec (contr) part 231-1002G1.	Shaftlock for R707 R710, R717 and R721
H713 thru H715		Not used.	
H716		FITTING, LUBRICATION: steel; hydraulic type; 1 in. over-all height, cadmium plated; 1/8, NPT, male; ball check valve, throat location; includes cap and gasket; Hazeltine Elec (mfr and contr) part 372-1004P1.	Gear case fitting
H717		Not used.	
H718	C	MOUNT, RESILIENT: pure gum rubber, 30 to 35 durometer hardness; Hazeltine Elec (mfr and contr) part 1592-1221P1.	For panel "A" assembly mounting
H719 thru H722		Not used.	

TABLE 8-3. MAINTENANCE PARTS LIST — Cont'd.

REF. DESIG.	NOTES	NAME AND DESCRIPTION	LOCATING FUNCTION
H723	C	SCREW, EXTERNALLY RELIEVED BODY: non-magnetic corrosion resisting steel; passivated finish; fillister type, 0.344 in. dia of head, 0.097 in. h of head; dim., externally relieved body; 0.110 in. to 0.115 in. dia from head, 1/2 in. largest bearing surface of head to end of undercut, 13/16 in. lg; 0.164 in. thd od, 32 thd per in. NC series, class 2 fit, 5/16 in. nominal lg; Hazeltine Elec (mfr and contr) part 209-1018P3.	Mounting screw for A716
H724	C	SCREW, CAP, HEXAGON HEAD: non-magnetic corrosion resistant; steel; passivated finish; hexagon; 0.289 in. h of head, 3-1/4 in. lg, 9/16 in. w across flats; 3/8 in.-16 size designation, NC series, class 2 fit, 1 in. thd lg; Hazeltine Elec (mfr and contr) part 1592-1139P1.	Secures servo amplifier chassis to pedestal
H725	C	CHAIN, BEAD: 0.1875 in. dia bead; brass; 2-5/8 in. lg excl coupling termination offsets; 4-3/8 in. over-all lg w/terminations; Hazeltine Elec (mfr and contr) part 1592-1134G1.	Holds A716 to pedestal frame when removed for operation
H726	C	BOLT, MACHINE: stainless steel, Spec MIL-S-853A, type class 7, type A, 22,000 psi min yield strength; passivated finish; finished; double hexagon head; 9/16 in. h of heads, 3/16 in. h of ea head, 9/16 in. w across flats; 3/8 in. nom od, 16 thd per in., NC series, class 2 fit, 9/16 in. lg of thd; Hazeltine Elec (mfr and contr) part 1592-1138P1.	Secures O787 to A718
H727	C	SCREW, CAP, HEXAGON HEAD: non-magnetic corrosion resisting steel; passivated finish; hexagon; 0.386 h of head, 1-1/2 in. lg, 3/4 in. max w across flats; 1/2 in.-13 size designation, NC series, class 2 fit, 1-1/4 in. thd lg; Hazeltine Elec (mfr and contr) part 207-1003P38.	Secures A718 to antenna pedestal
H728	C	WASHER, NONMETALLIC: felt; 3-15/16 in. od, 2-7/8 in. id, 3/8 in. thk; The Felters Co (mfr) part 3750 felt; Hazeltine Elec (contr) part 1592-1088P1.	For O787
H729	C	WASHER, NONMETALLIC: synthetic rubber per JAN-R-1149 class 1 type I, 3/8 in. od, 0.169 id, 1/16 in. thk; 30-40 durometer hardness rating; Hazeltine Elec (mfr and contr) part 1592-1124P1.	For A716 mounting
H730		CLAMP, LOOP: nylon; 29/32 in. lg by 3/8 in. h over-all; designed to hold material 3/8 in. max dia; Burndy Engineering Co (mfr) type HP-6N; Hazeltine Elec (contr) part CP-1295-6; (same as H310).	Cable clamp
H731		CLAMP, LOOP: nylon; 7/64 in. lg by 3/8 in. h over-all; designed to hold material 0.59 in. max dia; Burndy Engineering Co (mfr) type HP-10N; Hazeltine Elec (contr) part CP-1295-10; (same as H138).	Cable clamp
H732	C	WASHER, FINISHING: cold rolled steel; 3/4 in. od by 0.173 in. id by 3/16 in. thk over-all; extrusion 0.473 in. od tapered to 0.400 in. id by 5/32 in. h; Ward Leonard Electric Co (mfr) part 904; Hazeltine Elec (contr) part 236-1066P2.	For mounting R719, R727 and R728
H733		CLAMP, HOSE: w/screwdriver slot; stainless steel; passivated finish; 13/16 in. to 1-3/4 in. dia range, 9/16 in. w excl worm screw assembly; Breeze Corp (mfr) part QS200-M20S; Hazeltine Elec (contr) part 214-1024P6.	For H734
H734		HOSE, RUBBER: wrapped construction; 1-1/4 in. id, 1-9/16 in. od, 4 in. lg; Hazeltine Elec (mfr and contr) part 1592-1158P1.	Used between RF751 and servo amplifier

TABLE 8-3. MAINTENANCE PARTS LIST — Cont'd.

REF. DESIG.	NOTES	NAME AND DESCRIPTION	LOCATING FUNCTION
H735		Not used.	
H736	F	PIN, GROOVED, HEADED: stainless steel per Spec MIL-S-853A (SHIPS), Class 7, type A, 22,000 psi min yield strength; passivated finish; flat head; head 3/8 in. dia by 1/16 in. h; shank 1-3/16 in. lg by 0.3110 to 0.3125 in. dia w/end chamfered 15 deg by 1/8 in. lg; shank knurled 0.317 in. min dia by 1/4 in. lg 7/16 in. from head end; Hazeltine Elec (mfr and contr) part 1620-1001P1.	Secures H737 to antenna pedestal
H737	F	PIN, SHOULDER, HEADLESS: stainless steel, AISI type 303; passivated finish; 3 in. lg by 0.623 in. to 0.625 in. dia over-all; one shank 0.623 in. to 0.625 in. dia by 1-3/8 in. lg w/0.3125 to 0.3135 in. dia radial hole located 3/4 in. from end of pin, other shank 0.593 in. dia by 1-5/8 in. lg w/15 deg by 5/16 in. lg tapered end and one 5/16 in. dia radial hole spaced 1.498 in to 1.502 in. c to c from other hole; Hazeltine Elec (mfr and contr) part 1620-1003P1.	Antenna pedestal connecting pins
H738		ADAPTER, CABLE TO CONNECTOR: olive drab iridite finish; 5/8 in. cable opening dia; couples to connector by inside thd, 1 in. -20 thd size; metallic, resistant to corrosion; 15/16 in. lg by 1-1/4 in. dia ANA Spec AN3057-10A; Hazeltine Elec (mfr and contr) part 214-1012P3.	Cable clamp
H739	C	PACKING NUT, STUFFING TUBE: brass; 3/4 in. hex nut 3/8 in. h; 5/8 in. -18 NF-3 thd size, 3/16 in. thd lg; 0.228 in. dia clearance hole Hazeltine Elec (mfr and contr) part NT-872.	For S753
H740	C	WASHER, FINISHING: brass; 1/4 in hole dia, 5/8 in. od, 0.032 in. washer thk, 0.093 in depth of recess, 1/8 in. over-all h; Hazeltine Elec (mfr and contr) part 1592-1260P1.	For mounting H710
H741		GROMMET, RUBBER: synthetic rubber; 15/16 in. od of large flange, 11/16 in. od of groove, 1/8 in. thk of flange, 7/16 in. dia of hole, 3/8 in. over-all h, 1/8 in. w of groove; Spec MIL-G-3036, type AN931A7-11; Hazeltine Elec (mfr and contr) part 359-1001P16.	Protection for insulated wires
H742		CLAMP, LOOP: aluminum w/rubber cushion; loop type; 35/64 in. lg from 0.173 in. dia mtg hole to center of loop by 1/2 in. w by 0.040 in. thk; designed to hold material 7/16 in. max dia; Adel (mfr) part 754-7-2-6; Hazeltine Elec (contr) part 214-1003P7.	Cable clamp
H743 and H744		Not used.	
H745	C	STUFFING TUBE: feed-thru type, 1 packing chamber; straight; 1-3/4 in. lg excl packing nut, 1-1/4 in. od; 1.104 in min bore dia; 1-3/8 in. lg chamber, 11/16 in. -20 female thd, 7/8 in. lg thd; c/o gasket, gland nut, gland ring, gland washer, lock nut, tube body, washer, steel parts; Hazeltine Elec (mfr and contr) part 370-1009P44.	Fan drive stuffing tube
H746		GROMMET, RUBBER: synthetic rubber; MIL-C-3036; 1/4 in. dia hole, flange 5/8 in. od by 1/16 in. thk, groove 1/8 in. w by 7/16 in. dia, 1/4 in. h over-all; ANA Std part AN931-A4-7; Hazeltine Elec (contr) part 359-1001P13.	Protection for insulated wire
H747	C	SCREW, EXTERNALLY RELIEVED BODY: non-magnetic corrosion resisting steel; passivated finish; fillister head; 0.344 in. dia of head, 0.097 in. h of head; dim., externally relieved body; 0.110 in to 0.114 in. dia from head, 11/16 in. largest bearing surface of head to end of undercut, 1-1/4 in. lg; 0.164 in. thd od, 32 thd per in. NC-2, 9/16 in. nominal lg; Hazeltine Elec (mfr and contr) part 209-1018P4.	Retains A727

TABLE 8-3. MAINTENANCE PARTS LIST — Cont'd.

REF. DESIG.	NOTES	NAME AND DESCRIPTION	LOCATING FUNCTION
H748		CLAMP, LOOP: aluminum w/rubber cushions; loop type; 37/64 in. lg from 0.173 in. dia mtg hole to center of loop by 1/2 in. w by 0.040 in. thk; designed to hold material 1/2 in.max dia; Adel (mfr) part 754-8-2-6; Hazeltine Elec (contr) part 214-1003P8.	Cable clamp
H749	F	PIN, STRAIGHT, HEADLESS: stainless steel; 1 in. over-all lg, 0.3127 in. nom dia; one end large chamfer, one end small chamfer, one end 0.039 in. lg of chamfer, other end 1/32 in. lg of chamfer, 10 deg of chamfer; Hazeltine Elec (mfr and contr) part/dwg PN-1361.	Secures gear box housing and base
H750	C	WASHER, LOCK: steel; cadmium plated; 2.813 in. id bore by 3-53/64 in. over-all, 0.063 in. thk, internal tang width 0.813 in., external tang width 0.219 in., tang projection 3/16 in. min; 19 tangs; Marlin Rockwell Co (mfr) part W14-MRC; Hazeltine Elec (contr) WA1644.	For MP705
H751	C	SCREW, MACHINE: stainless steel; fillister head, 1/4 in. h of head, slot drive; 1/4 in.-20 thd, 1-5/64 in. over-all lg; 1-7/32 in. lg; Hazeltine Elec (mfr and contr) part/dwg SC-1265.	Secures gear box cover
H752	C	WASHER, FLAT: rd shape; stainless steel, SAE no. 302; rd hole, 21/64 in. dia, 0.031 in. lg; 0.750 in. od, 0.031 in. thk; Hazeltine Elec (mfr and contr) part/dwg WA-1643.	For MP719
H753		PIN, COTTER: corrosion-resistant steel; spring type; 8 bevel point, 1/16 in. nom dia by 3/4 in. nom lg; AN type AN380C2-3; Hazeltine Elec (mfr and contr) part AN380C2-3.	For MP719
H754	C	SCREW, MACHINE: steel, cadmium plated; socket head, drilled head; no. 6-32 NC-3 thd, 1/2 in. lg; Hazeltine Elec (mfr and contr) part SC-1266-1.	For MP726
H755		Not used.	
H756	C	SCREW, MACHINE: stainless steel; fillister head slotted drive; no. 1/4-20 NC-3 thd, 5/8 in. lg; 0.046 in. dia hole drilled in head; Hazeltine Elec (mfr and contr) part SC-1266-3.	Secures B753
H757		Not used.	
H758	C	SCREW, MACHINE: stainless steel; single chamfer; 0.065 in. h of head, 30 deg askew, 1 drilled hole; 5-40 thd, 1/4 in. lg approx; 3/8 in. lg; Hazeltine Elec (mfr and contr) part/dwg SC-1264.	For MP743
HR701		HEATING ELEMENT, ELECTRICAL: 115 v, 150 w; sheathed, monel sheath; 8 in. lg by 1-1/2 in. w by 3/8 in. h excl protruding terminals; Watlow Electric (mfr) part 1209D; Hazeltine Elec (contr) part 280-1090P1.	Servo amplifier heater strip
J701		CONNECTOR, RECEPTACLE, ELECTRICAL: 12 contacts; 1 connector mating end; 6 contacts, male, pin type; 41 amp, 1250 v dc, 900 v ac working voltage; 6 contacts male, pin type; 22 amp, 1250 v dc, 900 v ac working voltage; dielectric material per Spec MIL-C-5015B; straight shape; 1-13/32 in. lg by 2 in. w by 2 in. h excl terminals; w/inclosing aluminum base alloy shell, resistant to corrosion; polarized; locking type, 1-3/4 in.-18 thd on shell for mating w/coupling nut; four 0.147 in. dia mtg holes on 1-9/16 in. by 1-9/16 in. mtg centers; Spec MIL-C-5015B, type AN3102C-28-9P; Hazeltine Elec (contr) part 276-1131P5.	Front panel servo amplifier

TABLE 8-3. MAINTENANCE PARTS LIST — Cont'd.

REF. DESIG.	NOTES	NAME AND DESCRIPTION	LOCATING FUNCTION
J702		CONNECTOR, RECEPTACLE, ELECTRICAL: 19 contacts; 1 connector mating end; contact data; 19 contacts, male, pin type; 22 amp 700 v dc, 500 v ac; dielectric material per Spec MIL-C-5015B; straight shape; dim., excl protruding terminals 1-11/32 in. lg by 1-5/8 in. w by 1-5/8 in. h, w/inclosing aluminum base alloy shell, resistant to corrosion; polarized; locking type 1-3/8 in.-18 thd on shell for mating w/coupling nut; four 0.147 in. dia holes on 1-1/4 in. by 1-1/4 in. mtg centers; Spec MIL-C-5015B, type AN3102C-22-14P; Hazeltine Elec (contr) part 276-1146P2.	Front Panel servo amplifier to W12
J703 through J750		Not used.	
J751		CONNECTOR, RECEPTACLE, ELECTRICAL: 30 contacts; 1 connector mating end; 6 contacts, male, pin type; 41 amp, 700 v dc, 500 v ac working voltage; 24 contacts, male, pin type; 22 amp, 700 v dc, 500 v ac working voltage; dielectric material per Spec MIL-C-5015B; straight shape; 1-1/2 in. lg by 2-1/4 in. w by 2-1/4 in. h excl terminals; w/ inclosing aluminum base alloy shell, resistant to corrosion; polarized; locking type, 2 in.-18 thd on shell for mating w/coupling nut; four 0.173 in. dia mtg holes on 1-3/4 in. by 1-3/4 in. mtg centers; Spec MIL-C-5015B, type AN3102C-32-8P; Hazeltine Elec (mfr and contr) part 276-1141P3.	To power supply J403
J752		JACK, TELEPHONE: spring leaf contact, tip and sleeve contact arrangement J1; 1-21/64 in. max lg by 15/16 in. max w by 25/32 in. max h over-all; accommodates 2 conductor plug w/0.25 in. dia by 1-7/32 in. lg shaft; Spec MIL-J-641A, type JJ-034; Hazeltine Elec (mfr and contr) part 276-1114P1.	Phone plug
J752A		SHELL, ELECTRICAL, CONNECTOR: for telephone jack; aluminum, sand blast satin finish; cylindrical body w/sq mtg flange, over-all dim. 9/16 in. lg by 1-5/8 in. w by 1-5/8 in. h; four 0.120 in. dia mtg holes on 1-1/4 in. by 1-1/4 in. mtg centers; 1-3/8 in.-18 NEF-2 external coupling thd; American Phenolic Co (mfr) part 97-4085; Hazeltine Elec (contr) part 1592-1001P1.	For J752
J753		Same as J702.	Antenna gear box to W12
J754		CONNECTOR, RECEPTACLE, ELECTRICAL: 2 contacts; 1 connector mating end; 2 contacts, female, flat type; parallel arrangement, rated 10 amp, 250 v or 15 amp, 125 v, low loss plastic insert dielectric; straight shape; approx 9/16 in. lg by 1-5/8 in. h excl terminals; w/ partially inclosing aluminum shell, resistant to corrosion; locking type 1-3/8 in.-18 thd on shell for mating w/coupling nut; four 0.120 in. dia mtg hole on 1-1/4 in. by 1-1/4 in. mtg centers; American Phenolic Corp (mfr) part 97-4085; Hazeltine Elec (contr) part 276-1101P1.	Servicing outlet
J755	E	Part of RF751; for reference only.	
J756	E	Part of RF751; for reference only.	
J757	E	Part of B755; for reference only.	
K701		RELAY, ARMATURE: nonpile-up type, dpdt, 115 v ac, 8 amp; 1 winding single non-inductive winding, dc, 240 ohms resistance of winding, 27.5 v operating voltage, approx 0.114 amp; 2-5/8 in. max lg by 2-1/4 in. w by 2 in. max h; Potter and Brumfield (mfr) part MR-1250-1; Hazeltine Elec (contr) part 271-1073P1.	Motor reversing relay

TABLE 8-3. MAINTENANCE PARTS LIST — Cont'd.

REF. DESIG.	NOTES	NAME AND DESCRIPTION	LOCATING FUNCTION
K702		RELAY, ARMATURE: nonpile-up type; spdt; 250 v dc, contact rating 8 amp; voltage coil single winding, 27.5 v dc, approx 0.114 amp, 240 ohms resistance; holding coil 1 amp, 0.735 ohm, drop out between 3/4 and 1/2 amp; insulated; 2-5/8 in. max lg by 1-1/4 in. max w by 2-7/16 in. max h; Potter and Brumfield (mfr) part LM-1122-2; Hazeltine Elec (contr) part 271-1072P1.	Motor braking relay
K703		RELAY, ARMATURE: nonpile-up type, spst, normally open, single break, 115 v ac, 8 amp; 1 winding, 1 noninductive winding, dc, 4000 ohms resistance of winding, 99 v operating voltage, approx 0.0225 amp; 2-15/16 in. lg by 1-1/4 in. max w by 1-11/16 in. max h; Potter and Brumfield (mfr) part MR-1248; Hazeltine Elec (contr) part 271-1071P1.	V701 and V702 plate voltage relay
K704		RELAY, ARMATURE: nonpile-up, dpdt, double break, 250 v dc, 3 amp; 1 winding, 1 noninductive winding; dc; 230 ohms resistance of winding; 27.5 v operating voltage, approx 0.12 amp; 2 in. max lg by 1-1/4 in. max w by 1-3/4 in. max h; Potter and Brumfield (mfr) part KR-1361; Hazeltine Elec (contr) part 271-1074P1.	Synchro zeroing
K705		RELAY, ARMATURE: nonpile-up type, spst, normally open, single break, 115 v ac, 8 amp; 1 winding, 1 noninductive winding, dc, 240 ohms resistance of winding, 90 v operating voltage; 2-15/16 in. lg by 1-1/4 in. max w by 1-11/16 in. max h; Potter and Brumfield (mfr) part MR-1304-1; Hazeltine Elec (contr) part 271-1071P2.	V701 and V702 plate voltage relay
MP701	C	PRIMER, ADHESIVE: for rubber adhesives; B. B. Chemical Co (mfr) part 1007; Hazeltine Elec (contr) part 230-1019P1.	Primer for MP702
MP702		ADHESIVE: for gaskets; neoprene, high initial strength; B. B. Chemical Co (mfr) part 1021; Hazeltine Elec (contr) part 230-1020P1.	For gaskets O724, O725 and O1705
MP703		LUBRICATING OIL, GENERAL PURPOSE: Essolube HD-10W; Esso Standard Oil Co (mfr) part Essolube HD-10W; Hazeltine Elec (contr) part 230-1018P1.	For H728
MP704	C	COUPLING ASSEMBLY: mounts on 1:1 synchro as speed control; c/o Hazeltine Elec parts, 1 fillister head screw part SC-1266-4; 1 finger part MS-13342, the driving pin part PI-1289, 1 driver plate PI-1288, 1 spring clamp part PI-1287, 1 hub part SM-5778, 1 hub part SM-5777; Hazeltine Elec (mfr and contr) part/dwg A-19444; (incl MP738, MP739, MP740, MP741, MP745 and MP746).	For B753
MP705	C	ANTENNA, SPINDLE ASSEMBLY: for antenna; steel, SAE 4140, part is chrome plated and other part is cadmium plated; cylindrical shape, 33-25/32 in. lg, 4-7/8 in. dia of flange, 2.952 in. max dia of spindle body, 2.130 in. max id; Hazeltine Elec (mfr and contr) part/dwg A-19445.	For antenna mount and drive
MP706	C	PLUG, PIPE: aluminum alloy; solid head; cored body; head drilled for lock wire; dim. 0.438 in. distance across flats, 5/16 in. h of head, 3/8 in. id of core, 23/64 in. core depth, 51/64 in. over-all lg, 3/8 in. -18 NPT rh thd 45 deg seat; AN type AN913-3D; Hazeltine Elec (mfr and contr) part AN913-3D.	For gear box cover
MP707		WIRE, STEEL, CORROSION RESISTING: rd shape, 0.032 in. dia; corrosion-resisting steel, Spec QQ-W-423; composition FS302 or FS304, condition A; annealed; chemical composition FS302 or FS304; 277,000 psi tensile strength; AN type AN995C32; Hazeltine Elec (mfr and contr) part AN995C32; (part of MP733 and MP742).	Lock wire

TABLE 8-3. MAINTENANCE PARTS LIST — Cont'd.

REF. DESIG.	NOTES	NAME AND DESCRIPTION	LOCATING FUNCTION
MP708	C	CLAMP, RIM CLENCHING: for securing synchro; cast aluminum, alodine finish; bent shape, 120 deg angle, 1/4 in. thk; two 9/32 in. dia holes spaced at 90 deg angle; Hazeltine Elec (mfr and contr) part/dwg CP-1404.	Secures B753
MP709	C	COLLAR, SHAFT: collar for spindle body; cast aluminum, alodine finish; irregular rd shape, 5-7/8 in. max od, 2.967 in. max id, 9/16 in. deep; three 7/32 in. dia holes on 2-13/16 in. radius; Hazeltine Elec (mfr and contr) part/dwg CS-1722.	For spindle body MP705
MP710	C	CLAMP, RIM CLENCHING: for securing synchro; cast aluminum; alodine finish; irregular rd shape, 3-3/8 in. dia excl holes, 2-13/16 in. id, 3/16 in. thk; three 9/32 in. dia holes irregularly spaced on 3-3/4 in. bolt circle; Hazeltine Elec (mfr and contr) part/dwg CS-1723.	Secures B752
MP711	A	GASKET: rubber, MIL Spec, MIL-R-3065, grade SC415FF; 2-5/32 in. lg of aperture by 2-5/32 in. w of aperture by 1/32 in. thk; 1/8 in. inside corner radius; four 7/32 in. dia bolt holes; 2-1/2 in. over-all w by 7/32 in. outside corner radius by 3-1/8 in. over-all lg; 0.219 in. distance from outside edge to center of bolt hole; Hazeltine Elec (mfr and contr) part/dwg GA-1793.	For S753
MP712	A	GASKET: rubber, JAN Spec, JAN-R-1149, class 1; 1-7/8 in. dia of aperture, 1/4 in. lg of corner bevel, 1/16 in. thk, four 3/16 in. dia bolt holes, 2-1/4 in. over-all w, 1/4 in. outside corner radius, 2-1/4 in. over-all lg, 1/4 in. distance from outside edge to center of bolt hole; Hazeltine Elec (mfr and contr) part/dwg GA-1794.	For J751
MP713	A	GASKET: rubber, JAN Spec, JAN-R-1149, class 1; 1-3/16 in. dia of aperture by 3/16 in. lg of corner bevel by 1/16 in. thk; four 0.128 in. dia bolt holes spaced on 1-1/4 in. ctrs, 1-5/8 in. over-all w by 3/16 in. outside corner radius by 1-5/8 in. over-all lg; 3/16 in. distance from outside edge to center of bolt holes; Hazeltine Elec (mfr and contr) part/dwg GA-1796.	For J753
MP714	A	GASKET: rubber material; rectangular shape; over-all dim. 20-1/16 in. lg by 9-7/8 in. w by 1/8 in. thk, 7/8 in w of bearing surface, seventeen 0.281 in. dia bolt holes; Hazeltine Elec (mfr and contr) part/dwg GA-1797.	For antenna gear box cover
MP715	A	GASKET: fibre material; irregular rd shape; 5-7/8 in. max od, 5 in. id, 1/32 in. thk; three 7/32 in. dia holes on 2-13/16 in. radius; Hazeltine Elec (mfr and contr) part/dwg GA-1799.	For MP709
MP716	E	GEAR, SPUR: single material, steel, SAE no. 4140; 19 teeth, 20 deg tooth form, teeth hardened; 1.050 in. od of gear, 0.950 in. pitch dia, 0.562 in. w of face, 2-7/8 in. over-all lg, 1/2 in. od of one hub end, 0.937 in. hub end to gear face; 1/2 in. od of other hub end, 0.188 in. from hub end to gear face; 1-3/4 in. od by 1/4 in. lg flange; Hazeltine Elec (mfr and contr) part/dwg GR-1663; (part of MP742; for reference only).	For MP742
MP717	E	GEAR, SPUR: single material, aluminum; 88 teeth, 20 deg tooth form, teeth hardened; 4.500 in. od of gear, 4.400 in. pitch dia, 0.500 in. w of face, 0.500 in. over-all lg, 2-7/16 in. od of hub; Hazeltine Elec (mfr and contr) part/dwg GR-1664; (part of MP733; for reference only).	For MP733

TABLE 8-3. MAINTENANCE PARTS LIST — Cont'd.

REF. DESIG.	NOTES	NAME AND DESCRIPTION	LOCATING FUNCTION
MP718	E	GEAR, SPUR: single material, steel, SAE no. 4140; 22 teeth, 20 deg tooth form, teeth hardened; 1.333 in. od of gear, 1.2222 in. pitch dia, 1-1/16 in. w of face, 3-5/8 in. over-all lg, 0.703 in. max od one hub end, 1.56 in. from hub end to gear face; 0.703 in. max od other hub end, 1/8 in. from hub end to gear face; 2.625 in. od by 9/32 in. lg flange; Hazeltine Elec (mfr and contr) part/dwg GR-1665; (for reference only).	For MP733
MP719		GEAR, SPUR: single material, steel, SAE no. 4140; 19 teeth, 20 deg tooth form, teeth hardened; 1.050 in. od of gear, 0.950 in. pitch dia, 0.437 in. w of face, 0.437 in. over-all lg; Hazeltine Elec (mfr and contr) part/dwg GR-1666.	For B751
MP720		GEAR, SPUR: single material, stainless steel; 21 teeth, 20 deg tooth form, teeth hardened; 1.150 in. od of gear, 1.050 in. pitch dia, 3/16 in. w of face, 17/32 in. over-all lg, 0.312 in. od hub end, 0.2618 in. from end of hub to gear face; four 0.031 in. slots on hub; Hazeltine Elec (mfr and contr) part/dwg GR-1667.	For B752
MP721	E	GEAR, SPUR: single material, aluminum; 84 teeth, 20 deg tooth form, teeth hardened; 4.300 in. od of gear, 4.200 in. pitch dia, 0.375 in. w of face, 0.375 in. over-all lg, 7/8 in. od of hub; Hazeltine Elec (mfr and contr) part/dwg GR-1668; (for reference only).	For MP742
MP722		GEAR, SPUR: single material, aluminum; 126 teeth, 20 deg tooth form, teeth hardened; 7.111 in. od of gear, 7.000 in. pitch dia, 1 in. w of face, 1 in. over-all lg; Hazeltine Elec (mfr and contr) part/dwg GR-1669.	For antenna gear
MP723		GEAR, SPUR: single material, aluminum; 126 teeth, 20 deg tooth form, teeth hardened; 7.111 in. od of gear, 7.000 in. pitch dia, 1/4 in. w of face, 1/4 in. over-all lg; Hazeltine Elec (mfr and contr) part GR-1670.	For antenna gear
MP724		RETAINER, CAPACITOR: metallic; 5/8 in. w, 5/16 in. distance between center line of mtg hole, 2-13/16 in. h; one 3/16 in. dia mtg hole; Sprague Electric Co (mfr) part CP07FA3; Hazeltine Elec (contr) part/dwg MS-13402.	For C753
MP725		RING, RETAINING: beryllium copper, 180,000 psi min tensile strength, C38-40 Rockwell hardness; dim. data 0.260 in. id by 0.384 in. od by 0.031 in. thk; 0.182 in. opening; National Lock Washer Co (mfr) part WA-514; Hazeltine Elec (contr) part/dwg RR-1027.	For H751
MP726	C	CLAMP, C: to hold hub in antenna gear; stainless steel, passivated finish; cylindrical shape w/cut-off on one side, 1 in. od, 5/8 in. id, 1/4 in. thk w/0.015 in. chamfer, 0.062 in. split, 3/32 in. dia keyway in id; end drive 1/4 in. from split by 45 deg; 6-32 NC-3 thd hole one side, no. 25 drill hole other side on cut-off; Hazeltine Elec (mfr and contr) part/dwg SM-5762.	Secures B753 hub
MP727	C	COLLAR, SHAFT: collar for dc motor; steel, black oxide finish; rd shape, 3.7498 in. dia, 1-1/2 in. id, 1/4 in. thk; three 7/32 in. dia holes equally spaced on 3 in. bolt circle, counterbore 3/8 in. dia by 1/8 in. deep; Hazeltine Elec (mfr and contr) part/dwg SM-5763.	For B751
MP728	C	HUB: for synchro motor external shaft; stainless steel, passivated finish; cylindrical shape;over-all dim. 31/32 in. lg by 2 in. dia, by 0.3749 in. id; 2 in. dia by 7/32 in. thk flange; four 10-32 thd holes equally spaced on 1.5 in. dia bolt circle; Hazeltine Elec (mfr and contr) part/dwg SM-5761.	Hub for B753 external shaft

TABLE 8-3. MAINTENANCE PARTS LIST — Cont'd.

REF. DESIG.	NOTES	NAME AND DESCRIPTION	LOCATING FUNCTION
MP729		Not used.	
MP730	C	RUBBER STRIP, CELLULAR: for antenna gear box assembly; rubber, MIL Spec MIL-R-3065, grade SC305FF; cylindrical shape, 64 in. lg by 0.139 in. dia; Hazeltine Elec (mfr and contr) part/dwg GA-1795.	For antenna gear box
MP731		BEARING BALL, ANNULAR: ground; single row; radial; 2.9528 in. bore dia by 5.1181 in. od by 0.9843 in. w; steel, double sealed; external snap ring type; Marlin Rockwell Co (mfr) part MRC 215 SZZ Class 3; Hazeltine Elec (contr) part/dwg BB-1224.	For antenna spindle
MP732		BEARING BALL, ANNULAR: ground, single row; radial; 2.7559 in. bore dia by 4.9213 in. od by 0.9449 in. w; steel double sealed; Marlin Rockwell Co (mfr) part MRC 214 SZZG Class 3; Hazeltine Elec (contr) part/dwg BB-1225.	For antenna spindle
MP733		GEAR ASSEMBLY: c/o Hazeltine Elec parts, 1 gear GR-1665, 1 gear GR-1664, 4 screws SHS-S102C4, 4 washers LSLS10C, 2 roll pins PN1360-3, 9 in. lockwire AN995C32; rd shape, over-all dim. 3-39/64 in. lg by 4-1/2 in. dia; Hazeltine Elec (mfr and contr) part/dwg A-19532; (incl MP717 and MP718).	Transmits power from motor to spindle
MP734		BEARING BALL, ANNULAR: ground; single row; radial; 0.5906 in. bore by 1.3780 in. od by 0.4331 in. w; steel; external snap ring type; Marlin Rockwell Co (mfr) part MRC 202 SZZG Class 3; Hazeltine Elec (contr) part/dwg BB-1226.	For MP733
MP735		SEAL, PLAIN: 2-5/8 in. shaft dia by 3.500 in. bore dia by 3/8 in. wide; od 3.505 in.; Garlock Klozure (mfr) model 63X1939; Hazeltine Elec (contr) part/dwg PI-1285.	For antenna spindle
MP736	F	PACKING, PREFORMED: 5-5/8 in. id by 5-7/8 in. od by 1/8 in. w nom size; 5.609 in. by 0.139 in. w actual size; freeze resistant; AN6230 type; Garlock Klozure (mfr) part 24850-33; Hazeltine Elec (contr) part/dwg PI-1286.	For antenna bearing box base
MP737		SEAL, PLAIN: 2-15/16 in. shaft dia by 3.876 in. bore dia by 3/8 in. w; 3.881 in. od; Garlock Klozure (mfr) model 63X2149; Hazeltine Elec (contr) part/dwg PI-1284.	For antenna spindle
MP738	E	PIN, DRIVE: secures drive plate; stainless steel, AISI 303; 1/8 in. by 1/8 in. stock; Hazeltine Elec (mfr and contr) part/dwg PI-1289; (part of MP704; for reference only).	For MP704
MP739	E	FINGER: for synchro speed control; stainless steel, passivated finish; flat curved shape, over-all dim. 2-1/8 in. lg by 1/2 in. w by 3/32 in. thk; one end 0.339 in. dia hole, other end comes to a point; Hazeltine Elec (mfr and contr) part/dwg MS-13342; (part of MP704; for reference only).	For MP704
MP740	E	SPRING, CLAMP: spring tempered, phosphor bronze, 0.015 in. thk; nickel plated; Hazeltine Elec (mfr and contr) part/dwg PI-1287; (part of MP704; for reference only).	For MP704
MP741	E	PLATE, DRIVER: aluminum; approx 15/16 in. od by 1/16 in. thk; 4 mtg holes spaced at 90 deg on 3/4 in. dia; one centrally located shaft hole; Hazeltine Elec (mfr and contr) part/dwg PI-1288; (part of MP704, for reference only).	For MP704

TABLE 8-3. MAINTENANCE PARTS LIST — Cont'd.

REF. DESIG.	NOTES	NAME AND DESCRIPTION	LOCATING FUNCTION
MP742		GEAR ASSEMBLY: c/o Hazeltine Elec parts, 1 rollpin part PN-1360-2, lockwire part AN995C32 as required, 4 lockwashers part LSLS8C, 4 screws part SHS-S82C4, 1 gear part GR-1668, 1 gear part GR-1663; Hazeltine Elec (mfr and contr) part/dwg A-19531; (incl MP707, MP716, MP721 and MP755).	Transmits power from motor to spindle
MP743	C	SHAFT: stainless steel; passivate finish; irregular shape, 50 pitch knurl one end, other end plain; Hazeltine Elec (mfr and contr) part/dwg SM-5779.	Gear mounting external shaft for B753
MP744	C	NUT: steel, cadmium plated; for nominal shaft dia 2.7559 in. by 3-5/8 in. od; by 9/16 in. w by 3-5/16 in. od of face; distance between slots 3-3/8 in., width of slot 1/4 in., depth of slot 1/8 in.; Marlin Rockwell Co (mfr) part N14-MRC; Hazeltine Elec (contr) part NT-873.	For antenna spindle
MP745	E	HUB: cylindrical shape; stainless steel AISI 303, passivate finish; 9/16 in. lg by 1/2 in. od by 0.2505 in. bore over-all; 2 no. 4-40 NC-2 thd holes spaced at 90°, 0.218 in. from one end, other end stepped to extent of 0.040 in., od 0.336 in., Hazeltine Elec (mfr and contr) part SM-5777; (part of MP704, for reference only).	For MP704
MP746	E	HUB: irregular shape; stainless steel AISI 303, passivate finish; 0.437 in. lg by 5/8 in. od over-all dim.; 2 no. 4-40 NC-2 thd holes spaced at 120°; stepped to 1/2 in. od and 0.336 in. od; Hazeltine Elec (mfr and contr) part SM-5778; (part of MP704, for reference only).	For MP704
MP747		RING, RETAINING: carbon spring steel; straight; for shaft dim. 2.937 in., 0.093 in. thk by 2.801 in. groove dia by 0.103 in. w; Waldes Kohinoor, Inc (mfr) part 5100-293 SMF; Hazeltine Elec (contr) part/dwg RR-1026.	Retains MP731
MP748		RING, RETAINING: carbon spring steel; beveled; for shaft dim. 2.937 in., 0.093 in. thk by 2.717 in. groove dia by 0.078 in. w; Waldes Kohinoor, Inc (mfr) part 5102-293 SMF; Hazeltine Elec (contr) part/dwg RR-1025.	Retains MP731 on spindle
MP749		STUFFING, TUBE: feed through type, one packing chamber; straight; 1/2 in.-3/8 pipe thd by 1-1/2 in. lg over-all; brass zinc plated; incl elastic sealing compound no. 184-88; Imperial Brass Mfg. Co (mfr) part 68-FL; Hazeltine Elec (contr) part/dwg RC-1552.	Cable passage seal
MP750		BEARING BALL, ANNULAR: ground; single row radial; 0.3937 in. bore dia by 1.1811 in. od by 0.3543 in. w; steel, double sealed; external snap ring type; New Departure (mfr) part ND499500 Class 3; Hazeltine Elec (contr) part/dwg BB-1227.	For MP743
MP751	C	WASHER, LOCK: steel, cadmium plated; 2.813 in. id bore; internal tang 0.250 in. w, external tang 0.219 in. w; tang projection 3/16 in. min.; 0.063 in. thk; 19 tangs; 3-53/64 in. over-all od; Marlin Rockwell (mfr) part W14-MRC; Hazeltine Elec (contr) part WA-1644.	For MP744
MP752	C	CLAMP, C: to hold gear for synchro; stainless steel, passivated finish; cylindrical shape w/sq cut-off, 0.812 in. od. 0.312 in. id, 0.312 in. thk, 0.062 in. split; end drive 1/4 in. sq from split; 5-40 thd hole one side, 9/64 in. drill hole other side on cut-off; Hazeltine Elec (mfr and contr) part/dwg SM-5776.	For B752 gear
MP753	C	PIN, HOLLOW: corrosion resistant steel pins, passivate finish; Rockwell hardness "C" 47; for hole size 0.187 in. min, 0.192 in. max; "go ring gauge" 0.199 in. max, 0.194 in. min; 3/4 in. lg; Esna (mfr) part 79-040-187-0750; Hazeltine Elec (contr) part PN-1360-1.	For MP733

TABLE 8-3. MAINTENANCE PARTS LIST — Cont'd.

REF. DESIG.	NOTES	NAME AND DESCRIPTION	LOCATING FUNCTION
MP754	C	PIN, HOLLOW: corrosion resistant steel pins, passivate finish; Rockwell hardness "C" 43-52; for hole size 0.157 in. min. 0.192 in. max; "go ring gauge" 0.199 in. max, 0.194 in. min 1/2 in. lg; Esna (mfr) part 79-040-187-0500; Hazeltine Elec (contr) part PN-1360-3; (part of MP733).	For MP733
MP755	C	PIN, HOLLOW: corrosion resistant steel pin; passivate finish; Rockwell hardness "C" 47; 0.028 in. wall thickness; 0.125 in. nom dia; for hole size 0.125 in. min, 0.129 in. max; 7/16 in. lg; Esna (mfr) part 79-028-125-0437; Hazeltine Elec (contr) part PN-1360-2; (part of MP742).	For MP742
MP756	C	KEY, MACHINE: stainless steel, SAE 302, case hardened; 3/8 in. over-all lg, 1/8 in. over-all h, 1/8 in. w; Hazeltine Elec (mfr and contr) part/dwg PM-4838.	For MP719
MP757	F	PIN, STRAIGHT, HEADLESS: brass, half hard, Spec MIL-B-985; 60 to 90 "B" Rockwell hardness; bright alloy plated; 11/16 in. lg by 1/8 in. dia; Hazeltine Elec (mfr and contr) part 1592-1254P1; (part of RF751).	For RF751
O701		GASKET: neoprene, 30-40 durometer; 5 holes total, 1 locating hole 1-3/16 in. dia, 4 mtg holes 0.128 in. dia on 1-1/4 in. by 1-1/4 in. mtg/c; sq; 1-5/8 in. lg by 1-5/8 in. w by 1/16 in. thk; corners rounded on 3/16 in. radius; Hazeltine Elec (mfr and contr) part 1592-1042P1.	For J751 and J752
O702		PLATE, REINFORCEMENT: steel; passivating dip; 47/64 in. lg by 5/16 in. w by 0.032 in. thk; two 0.177 in. dia mtg holes spaced 7/16 in. c to c; Hazeltine Elec (mfr and contr) part 224-1003P2.	Terminal board reinforcement strip
O703		GASKET: synthetic rubber; 1.754 in. dia of aperture by 1.996 in. od; Hazeltine Elec (mfr and contr) part 276-1155P6.	For RF751
O704 through O722		Not used.	
O723	C	CLIP, SPRING: holder for handle; phosphor bronze, cadmium plated; painted finish; 3/4 in. lg by 5/8 in. w by 15/32 in. h, 0.050 in. thk; slot in center 0.050 in. thk, slot in center 0.331 in. lg by 0.169 in. w; Hazeltine Elec (mfr and contr) part 1592-1100P1.	Holder for H709
O724	A	GASKET: synthetic rubber, Spec JAN-R-1149, Class 1, type I; 5 holes total, 1-25/32 in. dia of aperture, 4 mtg holes 0.169 in. dia on 1-9/16 in. by 1-9/16 in. mtg/c; sq, 2-1/8 in. lg by 2-1/8 in. w by 1/32 in. thk; corners cut off 1/8 in. by 1/8 in.; Hazeltine Elec (mfr and contr) part 1592-1108P1.	Gasket for J701
O725	A	GASKET: synthetic rubber, Spec JAN-R-1149, Class 1, type I; 1-13/32 in. dia of aperture; 1/32 in. thk; four 0.128 in. dia bolt holes 1-1/4 in. c to c; 1-3/4 in. over-all w by 3/16 in. outside corner radius by 1-3/4 in. over-all lg; Hazeltine Elec (mfr and contr) part 1592-1308P1.	Gasket for J702
O726 through O728		Not used.	
O729	C	VALVE, SAFETY RELIEF: equalizes internal pressure of container to within 2.5 psi of external atmospheric pressure range of 4.2 to 15 psi; aluminum body, painted USMC green; mounts by 3/4 in.-16 NF-2 by 19/32 in. lg thd bushing; body 2-3/4 in. dia by 9/16 in. h; incl seal, plain washer, lockwasher and hex nut for mtg; A. Schrader's Son (mfr) part 4594A; Hazeltine Elec (contr) part 381-1012P1.	Air pressure valve for case

TABLE 8-3. MAINTENANCE PARTS LIST — Cont'd.

REF. DESIG.	NOTES	NAME AND DESCRIPTION	LOCATING FUNCTION
O730 through O737		Not used.	
O738		COVER, ELECTRICAL CONNECTOR: metallic material, resistant to corrosion; 15/16 in. dia by 7/16 in. h excl chain; 3/4 in.-20 internal thd for mtg; American Phenolic Co (mfr) part 9760-12; Hazeltine Elec (contr) part 218-1010P6.	Protective cap for J756
O739		COVER, ELECTRICAL CONNECTOR: metallic, resistant to corrosion; 1-9/16 in. dia by 7/16 in. h, excluding chain; internally threaded w/ 1-3/8 in.-18 thd; American Phenolic Corp (mfr) part 9760-22; Hazeltine Elec (contr) part 218-1001P9.	Protective cap for J702, J753, J752A and J754
O740 through O742		Not used.	
O743		COVER, ELECTRICAL CONNECTOR: metallic material, resistant to corrosion; 2-3/16 in. dia by approx 1/2 in. h; excl chain; 2 in.-18 internal thd for mtg; American Phenolic Corp (mfr) part 9760-32; Hazeltine Elec (contr) part 218-1001P13.	Protective cap for J751
O744 through O757		Not used.	
O758		SEAL, PLAIN: 2-15/16 in. shaft dia by 3.937 in. housing bore dia by 1/2 in. w; Johns Manville Co (mfr) part 4183; Hazeltine Elec (contr) part 287-1020P5.	Spindle oil seal and pedestal swing joint shaft
O759 through O777		Not used.	
O778	B	COVER, ELECTRICAL CONNECTOR: metallic material, resistant to corrosion; 1-59/64 in. dia by approx 1/2 in. h excluding chain; 1-3/4 in.-18 internal thd for mtg; American Phenolic Corp (mfr) part 9760-28; Hazeltine Elec (contr) part 218-1001P11.	Protective cap for J701
O779		Not used.	
O780		SLEEVE, COUPLING: for antenna support; cast stainless steel, passivate, painted finish; 7-7/16 in. lg by 9-1/2 in. w by 9 in. h; hub 6.8 in. lg by 3.748 in. dia; Hazeltine Elec (mfr and contr) part 1592-1094P1.	Mounting sleeve for 1-5/8 in. swing joint upper stub
O781	A	GASKET: synthetic rubber, Spec JAN-R-1149, Class 1, type I; 3-7/16 in. lg of aperture by 3-7/16 in. w of aperture by 3/32 in. thk; 9/32 in. bearing surface w by 4 in. over-all w by 4 in. over-all lg; Hazeltine Elec (mfr and contr) part 1592-1111P1.	For O786
O782	A	GASKET: synthetic rubber, Spec JAN-R-1149, Class 1, type I; 5-3/16 in. lg of aperture by 5-3/16 in. w of aperture by 3/32 in. thk; 1/2 in. bearing surface w; eight 0.196 in. dia bolt holes; 6-3/16 in. over-all w by 6-3/16 in. over-all lg; 3 in.c to c distance between bolt holes; Hazeltine Elec (mfr and contr) part 1592-1113P1.	For A716
O783	A	GASKET: synthetic rubber, Spec JAN-R-1149, Class 1, type I; 4-1/8 in. lg of aperture by 4-1/8 in. w of aperture by 3/32 in. thk; 1/2 in. bearing surface w; eight 0.196 in. dia bolt holes; 5-1/8 in. over-all w by 5-1/8 in. over-all lg; 2 in. c to c distance between bolt holes; Hazeltine Elec (mfr and contr) part 1592-1112P1.	For O786 retainer

TABLE 8-3. MAINTENANCE PARTS LIST — Cont'd.

REF. DESIG.	NOTES	NAME AND DESCRIPTION	LOCATING FUNCTION
O784		PACKING, PREFORMED: synthetic rubber; 5-3/8 in. id by 5-7/8 in. od by 1/4 in. dia; Spec MIL-P-5516A, type AN6227-59; Linear Inc (mfr) part 1820-59; Hazeltine Elec (contr) part 287-1004P59.	For A718
Q785		BEARING, BALL, ANNULAR: ground; double row; radial; internal self-aligning; non-loading groove; self-contained; 2.9528 in. bore by 5.1181 in. od by 0.9843 in. w; plain w/fillets; ABEC-1 tolerance; SKF Industries, Inc (mfr) part 1215; Hazeltine Elec (contr) part 302-1027P1.	For 1-5/8 in. swing joint shaft
O786	C	FILTER, AIR CONDITIONING: permanent type; aluminum mesh screen type w/drain holes in ea corner, aluminum frame; 4 in. lg by 4 in. w by 3/4 in. h over-all; American Air Filter Co. Inc (mfr) part 94C-11039-6; Hazeltine Elec (contr) part 369-1003P1.	For B701
O787	C	CAP, BEARING: protects bearing ball, annular; cast aluminum, painted finish; cylindrical shape w/four ears 7/16 in. radius spaced 90 deg apart, 6-1/4 in. od less ears, 1-3/16 in. h; Hazeltine Elec (mfr and contr) part 1592-1089P1.	For O785
O788 through O791		Not used.	
O792		COVER, ELECTRICAL, CONNECTOR: metallic, resistant to corrosion; 2-7/16 in. dia by approx 1/2 in. lg excl chain; mounts by internal thd, 2-1/4 in. -16; American Phenolic Corp (mfr) part 9760-36; Hazeltine Elec (contr) part 218-1010P2.	Protective cap for J755
O793 through O796		Not used.	
O797	C	PLATE, REINFORCEMENT: for terminal board; non-magnetic corrosion-resisting steel, passivated finish; 7/8 in. lg by 13/32 in. w by 0.032 in. thk over-all; two 0.187 in. to 0.209 in. dia mtg holes spaced 1/2 in. c to c; Hazeltine Elec (mfr and contr) part 224-1003P3.	Terminal board reinforcement strip
O798	C	LEVEL AND PLUMB: round; brass, zinc plated; 1.437 in. dia by 0.515 in. deep; 1 level, 1 plumb; plain vial mounted in brass housing; sensitivity 45 min per 0.1 in. bubble movement, operating temperature range -65 deg F to +160 deg F, flange approx 3/16 in. w by 5/32 in. thk w/three 0.120 in. dia mtg holes equally spaced on 1.250 in. bolt circle; Hazeltine Elec (mfr and contr) part 1592-1219P1.	Antenna level
O1701	C	SHIM: for rotary joint; 0.002 in. thk brass lamination; rd; 3 in. dia of aperture by 5-1/4 in. od by 1/8 in. thk; 4-1/2 in. bolt circle dia, four 11/32 in. dia holes; Hazeltine Elec (mfr and contr) part 1592-1150P1.	For rotary joint
O1702		GASKET: velbestos no. 170-1; 3 in. dia of aperture by 5-1/4 in. od by 1/32 in. thk; 4-1/2 in. bolt circle dia, four 11/32 in. dia bolt holes equally spaced; Hazeltine Elec (mfr and contr) part 1592-1151P1.	For rotary joint
O1703		COVER, ELECTRICAL CONNECTOR: metallic, resistant to corrosion; over-all dim. 2 in. lg excl rivet and chain by 2-1/4 in. dia; 1-15/16 in. -16 internal mtg thd; Hazeltine Elec (mfr and contr) part 1592-1166G1.	Connector shipping case
O1704		KEY, WOODRUFF: stainless steel, AISI no. 416, C35 to C40 Rockwell hardness; rd bottom; Whitney Key no. 7; 0.750 in. max circle dia by 0.126 in. max thk by 0.318 in. max h; Hazeltine Elec (mfr and contr) part 1592-1173P1.	Key for RF752

TABLE 8-3. MAINTENANCE PARTS LIST — Cont'd.

REF. DESIG.	NOTES	NAME AND DESCRIPTION	LOCATING FUNCTION
O1705		GASKET: synthetic rubber, Spec JAN-R-1149, Class 1, type I; 7-3/4 in. lg of aperture by 6-7/8 in. w of aperture by 1/8 in. thk; 17/32 in. bearing surface; ten 0.221 in. dia bolt holes; 7-15/16 in. over-all w by 8-13/16 in. over-all lg; Hazeltine Elec (mfr and contr) part 1592-1126P1.	For servo amplifier case
O1706		PACKING, PREFORMED: synthetic rubber, Spec MIL-P-5516A, Class B; 3-3/4 in. id by 4 in. od by 1/8 in. dia; Spec MIL-P-5516A, type AN6230-18; Hazeltine Elec (mfr and contr) part 287-1005P18.	For RF752
O1707		PACKING, PREFORMED: synthetic rubber, Spec MIL-P-5516A, Class B; 2-1/8 in. id by 2-3/8 in. od by 1/8 in. dia; Spec MIL-P-5516A, type AN6230-5; Hazeltine Elec (mfr and contr) part 287-1005P5.	For RF752
O1708 and O1709		Not used.	
O1710		PACKING, PREFORMED: synthetic rubber, Spec MIL-P-5516A, Class B; 1-3/4 in. id by 2 in. od by 1/8 in. dia; Spec MIL-P-5516A type AN6230-2; Hazeltine Elec (mfr and contr) part 287-1005P2.	For RF752
O1711	A	GASKET: synthetic rubber, Spec JAN-R-1149, Class 1, type I; 1 in. dia of aperture by 1-1/2 in. od by 1/16 in. thk; three 1/8 in. dia bolt holes equally spaced on 1-1/4 in. bolt circle; Hazeltine Elec (mfr and contr) part 1592-1251P1.	Gasket for O798
O1712		CLIP, CAPACITOR: for mtg capacitor; steel, cadmium plated; "U" shape; 5/8 in. nom lg by 19/32 in. nom w by 1/2 in. and 9/16 in. nom id by 5/8 in. h; Prestole Corp (mfr) part 500-500; Hazeltine Elec (contr) part 343-1003P2.	For C703 and C704
O1713		BEARING, BALL, ANNULAR: ground; single row; radial; 0.6299 in. bore by 1.3780 od by 0.5669 in. w; ABEC-1 tolerance; New Departure Mfg Co (mfr) part 88016; Hazeltine Elec (contr) part 1592-1252P2.	For B755
O1714 through O1716		Not used.	
O1717		BUSHING, SLEEVE: rubber; 0.437 in. id body by 0.552 in. od body by 2-1/2 in. over-all lg; 0.744 in. od flange by 1/64 in. w flange; ANA Spec, type AN3420-8; Hazeltine Elec (mfr and contr) part 204-1006P4.	For coaxial termination
O1718		BUSHING, SLEEVE: rubber; 0.562 in. id body by 0.615 in. od body by 2-3/8 in. over-all lg; 0.869 in. od flange, by 1/64 in. w flange; ANA Spec type AN3420-10; Hazeltine Elec (mfr and contr) part 204-1006P5.	For coaxial termination
O1719		IMPELLER, FAN, CENTRIFUGAL: multiblade type; forward curve blade; aluminum; single width; 4 blades; designed for cw rotation; approx 12 in. dia by 1-9/16 in. deep; 1 hub, single inside offset, 1 in. lg, 5/8 in. dia of bore, keyway 0.1875 in. w by 0.0942 in. max deep, 1-9/16 in. projection beyond side of wheel at one end; Propellair Div. of Robbins and Meyers, Inc (mfr) part 73686 mod; Hazeltine Elec (contr) part 1592-1253P2.	For B755
O1720 through O1727		Not used.	

TABLE 8-3. MAINTENANCE PARTS LIST — Cont'd.

REF. DESIG.	NOTES	NAME AND DESCRIPTION	LOCATING FUNCTION
O1728	C	IMPELLER, FAN, CENTRIFUGAL: multiblade type; forward curve blade; aluminum alloy; single w; 5 blades; designed for ccw rotation; over-all dim., 2.435 in. dia by 1-5/64 in. w; 1 hub single inside off-set, 45/64 in. lg, 9/16 in. dia, 7/16 in. projection beyond side of wheel at one end; Hazeltine Elec (mfr and contr) part 1592-1300P1.	For B702
O1729	A	GASKET: synthetic rubber, Spec JAN-R-1149, Class 1, type I; 4-1/4 in. lg of aperture by 4-1/8 in. w of aperture by 1/16 in. thk; 1/2 in. bearing surface w, eight 0.218 in. dia bolt holes; 5-1/8 in. over-all w by 5-1/4 in. over-all lg, two sides 4-5/8 in. c to c distance between bolt holes; two sides 4-3/4 in. c to c distance between bolt holes; 1/4 in. distance from center line of bolt holes to outside edges; Hazeltine Elec (mfr and contr) part 1592-1298P1.	Shipping plate gasket
O1730	A	GASKET: synthetic rubber, Spec JAN-R-1149; 3-1/4 in. lg of aperture by 3-1/4 in. w of aperture by 1/8 in. thk; 15/16 in. by 1-1/16 in. bearing surface w; sixteen 0.218 in. dia bolt holes, irregularly spaced; Hazeltine Elec (mfr and contr) part 1592-1296P1.	For retaining plate O1732
O1731	A	GASKET: synthetic rubber, Spec JAN-R-1149; nom dim., 4 in. w of aperture by 4-3/4 in. lg of aperture, on one corner cut-out of 1-13/16 in. radius, 1/8 in. thk, 5/8 in. bearing surface w, ten 0.218 in. dia bolt holes, irregularly spaced; Hazeltine Elec (mfr and contr) part 1592-1299P1.	Case gasket
O1732		Not used.	
O1733	A	GASKET: synthetic rubber, Spec JAN-R-1149; 2-5/8 in. dia of aperture by 3-7/16 in. od; 1/16 in. thk; six 0.187 in. dia bolt holes equally spaced on a 3-1/8 in. dia bolt circle; Hazeltine Elec (mfr and contr) part 1592-1294P1.	Blower gasket
O1734	A	SCREEN, WINDOW, METAL: c/o no. 16 mesh screen assembly in frame; brass, green finish 4 in. lg by 4 in. w by 3/4 in. deep; Hazeltine Elec (mfr and contr) part 1592-1289G1.	For B702
P701		CONNECTOR, PLUG, ELECTRICAL: 12 female contacts; one connector mating end; 6 contacts; rated 41 amp, 1250 v dc, 900 v ac; 6 contacts female, rated 22 amp, 1250 v dc, 900 v ac; dielectric material per MIL-C-5015B; straight shape; 2.251 in. lg by 1.969 in. dia over-all; locking type 1-3/4 in. -18 thd coupling nut; w/o conduit nut, 1-7/16 in. -18 external thd; Spec MIL-C-5015B, AN type AN3106C-28-9S; Hazeltine Elec (mfr and contr) part 276-1160P6.	Cable termination for W10 and W10A
P702		CONNECTOR, PLUG, ELECTRICAL: 19 contacts; 1 connector mating end; 19 contacts, female, pin type; 22 amp, 700 v dc, 500 v ac; dielectric material per MIL-C-5015B; angle shape, 90 deg angle; over-all dim., 2-3/8 in. max lg, 1-19/32 in. w, 1-5/16 in. h; locking type, 1-3/8 in. -18 thd coupling nut; w/o conduit nut, 1-3/16 in. -18 thd size, cable accommodation at an angle to contact face; pressurized; Spec MIL-C-5015B, type AN3108C-22-14S; Hazeltine Elec (contr) part 276-1205P1.	Cable termination for W12
P703 through P750		Not used.	

TABLE 8-3. MAINTENANCE PARTS LIST — Cont'd.

REF. DESIG.	NOTES	NAME AND DESCRIPTION	LOCATING FUNCTION
P751		CONNECTOR, PLUG, ELECTRICAL: 30 rd female contacts; one connector mating end; 6 rd, female contacts rated at 41 amps, 700 v dc, 500 v ac; 24 rd, female contacts rated at 22 amps, 250 v dc, 200 v ac; dielectric material per MIL-C-5015B; straight shape; 2.376 in. lg by 2.219 in. dia over-all; locking type, 2 in.-18 thread coupling nut; w/o conduit nut, 1-3/4 in.-18 thd on shell for mating with coupling nut; environment resistant; Spec MIL-C-5015B; AN type AN3106A-32-8S; Hazeltine Elec (contr) part 276-1159P3; (same as P403).	Cable termination for W11 and W11A
P752		Not used.	
P753		Same as P702.	Cable termination for W12
P754 through P756		Not used.	
P757		CONNECTOR, PLUG, ELECTRICAL: 3 contacts; 1 connector mating end; 3 contacts, female, pin type, 22 amp, 1250 v dc, 900 v ac, dielectric material per MIL-C-5015B; angle shape, 90 deg angle; over-all dim., 2-5/32 in. lg by 1.344 in. w by 1.188 in. h; locking type 1-1/8 in.-18 thd coupling nut; w/o conduit nut, 1 in.-20 thd size, cable accommodation at an angle to contact face; Spec MIL-C-5015B; type AN3108A-18-22S; Hazeltine Elec (contr) part 276-1215P1.	To blower unit
R701		RESISTOR, FIXED, FILM: metal film; 6,800 ohms ±1% tolerance; 5 w; -0.05% max of total resistance per deg C; 2 in. max lg of body by 1/2 in. od of body by 0.325 in. max id of body; Continental Carbon Inc (mfr) type X-5; Hazeltine Elec (contr) part 280-1101P1.	Grid phase shift for V701
R702		Same as R701.	Grid phase shift for V702
R703	B	RESISTOR, FIXED, COMPOSITION: 100,000 ohms ±5%; 1/2 w; F characteristic; body 0.416 in. max lg by 0.161 in. max od; insulated; Spec MIL-R-11A, MIL type RC20BF104J; Hazeltine Elec (contr) part 280-1015P145.	Grid for V701
R704		Same as R703.	Grid for V702
R705	B	RESISTOR, FIXED, COMPOSITION: 9100 ohms ±5%; 1 w; F characteristic; body 0.760 in. max lg by 0.264 in. max od; insulated; Spec MIL-R-11A, MIL type RC30BF912J; Hazeltine Elec (contr) part 280-1002P108.	Part of voltage feedback resistor chain
R706		Same as R705.	Part of voltage feedback resistor chain
R707		RESISTOR, VARIABLE: composition; 1 section, 25,000 ohms ±10%; 2 w; std A taper; body and case material per Spec JAN-R-94, inclosed; 1-3/32 in. max dia by 21/32 in. max depth; single rd metal shaft 1/4 in. dia by 7/8 in. lg from mtg surface, 0.047 in. w by 0.063 in. deep slot; Spec JAN-R-94, type RV4ATSD253A, except special size; Hazeltine Elec (contr) part 240-1004P15.	Feedback adjustment
R708		Same as R705.	Part of voltage feedback resistor chain
R709		Same as R705.	Part of voltage feedback resistor chain

TABLE 8-3. MAINTENANCE PARTS LIST — Cont'd.

REF. DESIG.	NOTES	NAME AND DESCRIPTION	LOCATING FUNCTION
R710		RESISTOR, VARIABLE: composition; 1 section, 5000 ohms ±10%; 2 w; std A taper; body and case material per Spec JAN-R-94; inclosed; 1-3/32 in. max dia by 21/32 in. max depth; single rd metal shaft 1/4 in. dia by 7/8 in. lg from mtg surface, 0.047 in. w by 0.063 in. deep slot; Spec JAN-R-94, type RV4ATSD502A, except special size; Hazeltine Elec (contr) part 240-1004P11.	Current feedback adjustment
R711	B	RESISTOR, FIXED, COMPOSITION: 8200 ohms ±5%; 1 w; F characteristic; body 0.760 in. max lg by 0.264 in. max od; insulated; Spec MIL-R-11A, MIL type RC30BF822J; Hazeltine Elec (contr) part 280-1002P106.	Bias for V703B
R712		Same as R711.	Bias for V703B
R713	B	RESISTOR, FIXED, COMPOSITION: 1100 ohms ±5%; 1 w; F characteristic; body 0.760 in. max lg by 0.264 in. max od; insulated; Spec MIL-R-11A, MIL type RC30BF112J; Hazeltine Elec (contr) part 280-1002P75.	Bias for V703B
R714		Not used.	
R715	B	RESISTOR, FIXED, COMPOSITION: 4700 ohms ±5%; 1 w; F characteristic; body 0.760 in. max lg by 0.264 in. max od; insulated; Spec MIL-R-11A, MIL type RC30BF472J; Hazeltine Elec (contr) part 280-1002P97.	Bias for V703B
R716	B	RESISTOR, FIXED, COMPOSITION: 15,000 ohms ±5%; 1/2 w; F characteristic; body 0.416 in. max lg by 0.161 in. max od; insulated; Spec MIL-R-11A, MIL type RC20BF153J; Hazeltine Elec (contr) part 280-1015P115.	Bias for V703B
R717		Same as R710.	Cathode bias adjustment for V706
R718	B	RESISTOR, FIXED, COMPOSITION: 2200 ohms ±5%; 1 w; F characteristic; body 0.760 in. max lg by 0.264 in. max od; insulated; Spec MIL-R-11A, MIL type RC30BF222J; Hazeltine Elec (contr) part 280-1002P85.	Current feedback resistor chain
R719	B	RESISTOR, FIXED, WIRE WOUND: inductive winding; 50 ohms ±5%; 38 w; 275 deg C max continuous operating temp, 25 deg C ambient temp; body 4 in. lg by 29/32 in. max od by 9/16 in. max id; protective covering per Spec MIL-R-26B; resistant to humidity; terminals 23/64 in. max lg by 11/64 in. min to 21/64 in. max w; Spec MIL-R-26B, type RW35G500; Hazeltine Elec (contr) part 280-1010P35.	Damping resistor for B751
R720		Same as R703.	Plate for V705A
R721	B	RESISTOR, VARIABLE: composition; 1 section, 50,000 ohms ±10%; 2 w; std A taper; body and case material per Spec JAN-R-94; inclosed; 1-3/32 in. max dia by 21/32 in. max depth; single rd metal shaft 1/4 in. dia by 7/8 in. lg from mtg surface, 0.047 in. w by 0.063 in. deep slot; Spec JAN-R-94, type RV4ATSD503A, except special size; Hazeltine Elec (contr) part 240-1004P17.	Bias adjust for V705A plate
R722		Same as R715.	Cathode bias for V706
R723	B	RESISTOR, FIXED, COMPOSITION: 10,000 ohms ±5%; 1 w; F characteristic; body 0,760 in. max lg by 0.264 in. max od; insulated; Spec MIL-R-11A, MIL type RC30BF103J; Hazeltine Elec (contr) part 280-1002P 109.	Cathode bias for V706
R724	B	RESISTOR, FIXED, COMPOSITION: 3.3 meg ±5%; 1/2 w; F characteristic; body 0.416 in. max lg by 0.161 in. max od; insulated; Spec MIL-R-11A, MIL type RC20BF335J; Hazeltine Elec (contr) part 280-1015P199.	Time delay circuit for V706 limiter

TABLE 8-3. MAINTENANCE PARTS LIST — Cont'd.

REF. DESIG.	NOTES	NAME AND DESCRIPTION	LOCATING FUNCTION
R725	B	RESISTOR, FIXED, COMPOSITION: 6800 ohms ±5%, 1 w; F characteristic; body 0.760 in. max lg by 0.264 in. max od; insulated; Spec MIL-R-11A, MIL type RC30BF682J; Hazeltine Elec (contr) part 280-1002P103.	Current feedback resistor chain
R726	B	RESISTOR, FIXED, COMPOSITION: 680 ohms ±5%; 1 w; F characteristic; body 0.760 in. max lg by 0.264 in. max od; insulated; Spec MIL-R-11A, MIL type RC30BF681J; Hazeltine Elec (contr) part 280-1002P67.	Current feedback resistor chain
R727	B	RESISTOR, FIXED, WIRE WOUND: inductive winding; 5 ohms ±5%; 38 w; 275 deg C max continuous operating temp, 25 deg C ambient temp; body 4 in. lg by 29/32 in. max od by 9/16 in. max id; protective covering per Spec MIL-R-26B; resistant to humidity; terminals 23/64 in. max lg by 11/64 in. min to 21/64 in. max w; Spec MIL-R-26B, type RW35G5RO; Hazeltine Elec (contr) part 280-1010P15.	Plate for V702
R728		Same as R727.	Plate for V701
RF751		LINE SECTION, RADIO FREQUENCY TRANSMISSION: bronze; painted finish; mounts by terminations; "T" shaped; leg approx 41 in. lg; head approx 18-1/2 in. w; Hazeltine Elec (mfr and contr) part 1592-5017G1; (incl RF751A and RF751B).	Rotary joint lower section
RF751A		LINE SECTION, RADIO FREQUENCY TRANSMISSION: bronze tubing, beryllium contact; USMC green; mounts by terminations; irregular shape; 17.621 in. lg by 1.540 in. w; Hazeltine Elec (mfr and contr) part 1592-5017P1, 2, 3, 7, 8, 9, 12, 14, 15, 16, 21, 22, 23, 24, 26, 28, 29, 30, 31, 32 and 33; (part of RF751).	Part of rotary joint lower section
RF751B		LINE SECTION, RADIO FREQUENCY TRANSMISSION: bronze tubing, beryllium contact; USMC green; mounts by terminations; straight shape; 39.433 in. lg by 0.763 in. od; Hazeltine Elec (mfr and contr) part 1592-5017P10, 11, 19, 20, 25 and 27; (part of RF751).	Part of rotary joint lower section
RF752		COUPLER, ROTARY, RADIO FREQUENCY: single coaxial cable type; 39-9/32 in. lg by 5-1/4 in. dia; Chicksan (mfr) part 1228DGC mod; Hazeltine Elec (contr) part 1592-5015G1.	Coaxial cable to adapter
RF753		Not used.	
RF754		LINE SECTION, RADIO FREQUENCY TRANSMISSION: rotary joint to pedestal; 50 ohms impedance; brass; USMC green; mts by thd coupling; 15-11/64 in. lg by 7-1/64 in. w by 2-5/8 in. h; marked "RF754"; Hazeltine Elec (mfr and contr) part 1592-5014G1; (incl E813, E814 and O850).	Rotary joint horn to pedestal
S701		SWITCH, PUSH: dpst; rated 12 amp at 125 v or 6 amp at 250 v ac and dc for nom load; momentary action; normally open w/manual latch; 1-7/8 in. lg by 53/64 in. w by 1-7/64 in. h excluding external actuator, 2-13/64 in. h including actuator; Cutler Hammer Inc (mfr) part 8909K128, dwg A90-877; Hazeltine Elec (contr) part 228-1003P1.	Servo amplifier interlock
S702		SWITCH, THERMOSTATIC: spst double break; contacts open on temp increase, opens at 15 deg C, closes at 0 deg C; bimetal element; rated 8 amp, 125 v ac or 10 amp, 30 v dc non-inductive; 0.750 in. max lg by 0.345 in. w by 1-1/64 in. h over-all; Stevens Mfg Co (mfr) type M; Hazeltine Elec (contr) part 271-1091P2.	Low temperature thermostat
S703		SWITCH, THERMOSTATIC: spst double break; contacts close on temp increase, closes at 25 ±3 deg C, opens at 15 deg C max below closing temp; bimetal element; rated 8 amp, 125 v ac or 10 amp, 30 v dc non-inductive; 0.750 in. max lg by 0.345 in. w by 1-1/64 in. h over-all; Stevens Mfg Co (mfr) type M; Hazeltine Elec (contr) part 271-1091P3.	Blower thermostat for B701

TABLE 8-3. MAINTENANCE PARTS LIST — Cont'd.

REF. DESIG.	NOTES	NAME AND DESCRIPTION	LOCATING FUNCTION
S704 through S752		Not used.	
S753		SWITCH, ROTARY: sectional type, 4 sections; 2 positions, max number of switching positions possible; nonpile-up type, 4 moving contacts, 8 fixed contacts, 4 poles, 1 throw, 125 v ac, 10 amp for nom load; non-shorting contacts; physical dim. 3-5/16 in. lg by 2-1/8 in. w by 2-1/8 in. h; screwdriver-slotted shaft type, 3-1/8 in. lg incl integral handle, 7/32 in. dia; Arrow-Hart & Hegeman Electric Co (mfr) part 80156; Hazeltine Elec (contr) part 228-1074P1.	For B752 on-off switch
S754 and S755		Not used.	
S756		SWITCH, SENSITIVE: spst, normally closed; dc, ac, 125 v max, 10 amp; dim. excl actuator 1-15/16 in. lg by 11/16 in. w by 15/16 in. h; roller leaf type actuator, 1-3/8 in. from center of mtg to free position of actuator, 0.150 in. min total travel, 0.075 in. max pre-travel, 0.075 in. min over-travel; 8 to 16 oz. operating force; 3 oz. min release force; momentary action; Unimax Switch, Div. of WL Maxson Corp (mfr) type DMXF; Hazeltine Elec (contr) part 228-1058P1.	Synchro zeroing cam switch
T701		TRANSFORMER, POWER, STEP-UP: hermetically sealed; fully inclosed, metal case; primary winding 115 v, 400 cycles, single phase; secondary winding 250 v, 20 ma; 1275 v rms insulation; air-cooled; varnish impregnated and wax filled; 1-27/32 in. h by 1-5/8 in. lg by 1-5/8 in. w; Spec MIL-T-27; Hazeltine Elec (mfr and contr) part 292-1270G1.	Grid transformer for V701 and V702
T702		TRANSFORMER, POWER, STEP-DOWN: hermetically sealed, fully inclosed, metal case; primary winding 78, 115 v, 400 cycles, single phase; secondary windings, 1st 2.5 v at 11 amp, 2nd 2.5 v at 11 amp, 3rd 6.3 v at 1.2 amp, 4th 6.3 v at 0.3 amp; 1780 v rms insulation; air-cooled; varnish impregnated and wax filled; 3-7/8 in. h by 2-7/8 in. lg by 2-5/8 in. w; Spec MIL-T-27; Hazeltine Elec (mfr and contr) part 292-1309G1.	Filament transformer
T703		TRANSFORMER, CURRENT: for outdoor use; primary 400 cycles, 1500 v rms insulation; single phase; 2 amp for ea primary, 0.005 amp secondary; wound primary; over-all dim. excl terminals, 1-21/32 in. lg by 1-3/16 in. w by 1-3/16 in. h; Spec MIL-T-27, type TF1A02YY; Hazeltine Elec (mfr and contr) part 292-1269G1.	For V704
T704		TRANSFORMER, POWER, STEP-UP: hermetically sealed; fully inclosed, metal case; primary winding 115 v, 400 cycles; single phase; secondary winding 620 v, center tapped, 2 amp; 1780 v rms insulation; air-cooled; wax filled; 6-5/32 in. h by 7-3/16 in. lg by 6-7/16 in. w; Spec MIL-T-27; type TF1RX02YY; Hazeltine Elec (mfr and contr) part 292-1310G1.	Plate transformer for V701 and V702
TB701	C	TERMINAL BOARD: plastic board; incl terminals, 16 solder stud type; over-all dim., excl terminals, 5-3/4 in. lg by 3-3/8 in. w by 0.122 in. thk; Hazeltine Elec (mfr and contr) part 1592-1125G1.	Panel "A"
TB702	C	TERMINAL BOARD: plastic board; incl terminals, 12 solder stud type; over-all dim., excl terminals, 2-3/4 in. lg by 2-1/16 in. w by 0.122 in. thk; Hazeltine Elec (mfr and contr) part A-19463.	Panel "B"

TABLE 8-3. MAINTENANCE PARTS LIST — Cont'd.

REF. DESIG.	NOTES	NAME AND DESCRIPTION	LOCATING FUNCTION
TP701		JACK, TIP: standard phone tip control element accommodated; insulated cap, plastic, red; nonprecious metal, precious metal plated; nonprecious metal plated body; terminal lug; Diamond Mfg Co (mfr) part A-10001-1; Hazeltine Elec (contr) part 276-1137G2.	Test point
TP702		Same as TP701.	Test point
V701		ELECTRON TUBE: glass envelope; thyratron, inert gas triode; Spec MIL-E-1C, MIL type 5684/C3J/A; Hazeltine Elec (contr) part 5684/C3J/A.	B751 motor drive thyratron
V702		Same as V701.	B751 motor drive thyratron
V703		ELECTRON TUBE: reliable miniature twin triode; MIL type 5751, Spec MIL-E-1B; Hazeltine Elec (contr) part 5751.	Grid bias control on V701 and V702 armature current limiter for B751
V704		ELECTRON TUBE: reliable miniature twin triode, receiving; MIL type 5726/6AL5W, Spec MIL-E-1B; Hazeltine Elec (contr) part 5726/6AL5W.	Current feedback rectifier
V705		Same as V704.	Grid bias rectifier V701 and V702 armature current limiting for B751
V706		ELECTRON TUBE: glass envelope; thyratron, gas tetrode, Spec MIL-E-1C, MIL type 5727/2D21W; Hazeltine Elec (mfr and contr) part 5727/2D21W.	Armature current limiter
W701		CABLE, POWER, ELECTRICAL: 3 conductors, no. 16 AWG, copper, 26 strands, no. 30 AWG; synthetic resin or synthetic rubber; materials in sequence from insulated conductor out, synthetic resin or synthetic rubber, rubber; 2000 v dielectric test; rd cross section; 0.450 in. dia over-all; Spec MIL-C-915, type TCOP-3; Hazeltine Elec (mfr and contr) part 273-1067P2.	Internal wiring
XV701	B	SOCKET, ELECTRON TUBE: 4 contacts medium; no contacts missing; body molded construction, ceramic, glazed, treated; accommodation hole not required; 4 holes, 0.210 in., spaced 2-5/16 in. by 2-5/16 in. mtg centers; provisions for mtg electron tube shield are provided, bayonet type; EF Johnson (mfr) part 123-209SB; Hazeltine Elec (contr) part 282-1027P1.	Socket for V701
XV702		Same as XV701.	Socket for V702
XV703		SOCKET, ELECTRON TUBE: noval contact configuration; no contacts missing; molded low loss conposition body; rd shaped plain body accommodation hole required to clear 47/64 in. max dia body, clinch type mtg, two mtg holes 0.125 in. dia spaced 1.125 in. c to c; provisions for mtg bayonet type electron tube shield provided; electron tube retaining device not incl; Spec JAN-S-28A, JAN type TS103P01; Hazeltine Elec (contr) part 282-1002P2.	Socket for V703
XV704	B	SOCKET, ELECTRON TUBE: type E miniature 7 pin contact configuration; no contacts missing; molded low loss composition body; requires round shaped plain body accommodation hole to clear 0.625 in. max dia body; two 1/8 in. dia mtg holes spaced 7/8 in. c to c; provision for mtg bayonet type electron tube shield provided; electron tube retaining device not incl; Spec JAN-S-28A, type TS102P01; Hazeltine Elec (contr) part TS102P01; (same as XV106).	Socket for V704
XV705		Same as XV704.	Socket for V705
XV706		Same as XV704.	Socket for V706

TABLE 8-3. MAINTENANCE PARTS LIST — Cont'd.

REF. DESIG.	NOTES	NAME AND DESCRIPTION	LOCATING FUNCTION
801-899 Series	E	ANTENNA: Army-Navy Antenna AS-673/TPS-1E, ITE Circuit Breaker Co (mfr) part/dwg 495000; Hazeltine Elec (contr) per mfr's part/dwg 495000; Navy Spec MIL-R-0015895D(SHIPS) and Amendment 2.	
A801	C	SUPPORT, ANTENNA: aluminum alloy; USMC green finish; approx 5 ft lg by 13-1/2 in. h by 13-1/8 in. w over-all dim.; four 9/16 in. dia holes on 6-1/2 in. by 9 in. mtg center; ITE Circuit Breaker Co (mfr) part 495006-901; Hazeltine Elec (contr) per mfr's part 495006-901.	Antenna support
A802	C	COVER, FEED-HORN: outside surface one sheet of no. 128 glass cloth, remainder glass material; USMC green; 17-31/32 in. lg by 8-23/32 in. w by 4-7/16 in. h over-all dim.; 4 mtg holes 2 ea side 0.201 in. dia spaced 8.625 in. c to c, 4-43/64 in. from ends; 8 holes, 4 ea end 0.128 in. dia spaced 1.997 in. from inside edge spaced in line on 1.181 in., 2.362 in. and 1.181 in. centers; ITE Circuit Breaker Co (mfr) part 295002-901; Hazeltine Elec (contr) per mfr's part 495002-901.	Feed-horn cover
E801	E	CONTACT, ELECTRICAL: silver w/graphite contact surface; 2 in. lg by 0.762 in. dia over-all; 5/8 in.-18 thd one end; Hazeltine Elec (mfr and contr) part 1592-1217G1; (part of RF856).	For RF856
E802	C	REFLECTOR SECTION, ANTENNA: center section; aluminum; USMC green enamel finish; lattice-metal type construction; parabolic shape; approx 93 in. lg by 42 in. w by 32 in. d, over-all dim.; threaded coupling mounted; ITE Circuit Breaker Co (mfr) part 495000-501; Hazeltine Elec (contr) per mfr's part 495000-501.	Antenna section
E803	C	REFLECTOR SECTION, ANTENNA: left end section; aluminum; USMC green enamel finish; lattice metal type construction; parabolic shape; approx 73 in. lg by 41 in. w by 21 in. d, over-all dim.; threaded coupling mounted; ITE Circuit Breaker Co (mfr) part 495000-505; Hazeltine Elec (contr) per mfr's part 495000-505.	Antenna section
E804	C	REFLECTOR SECTION, ANTENNA: right end section; aluminum; USMC green enamel finish; lattice metal type construction; parabolic shape; approx 73 in. lg by 41 in. w by 21 in. d, over-all dim.; threaded coupling mounted; ITE Circuit Breaker Co (mfr) part 495000-506; Hazeltine Elec (contr) per mfr's part 495000-506.	Antenna section
E805	C	REFLECTOR SECTION, ANTENNA: right intermediate section; aluminum; USMC green enamel finish; lattice metal type construction; parabolic shape; approx 75 in. lg by 39 in. w by 21 in. d, over-all dim.; threaded coupling mounted; ITE Circuit Breaker Co (mfr) part 495000-504; Hazeltine Elec (contr) per mfr's part 495000-504.	Antenna section
E806	C	REFLECTOR SECTION, ANTENNA: left intermediate section; aluminum; USMC green enamel finish; lattice metal type construction; parabolic shape; approx 75 in. lg by 39 in w by 21 in d, over-all dim.; threaded coupling mounted; ITE Circuit Breaker Co (mfr) part 495000-503; Hazeltine Elec (contr) per mfr's part 495000-503.	Antenna section
E807	C	ANTENNA: dipole section; brass, silver plated; 10-1/16 in. lg by 6-1/4 in. w over-all; ITE Circuit Breaker Co (mfr) part 495008-901; Hazeltine Elec (contr) per mfr's part 495008-901.	Antenna feed-horn
E808	E	CONTACT, ELECTRICAL: oilite bronze contact surface; 2-5/8 in. lg by 0.238 in. dia over-all; 6-32 thd one end; Hazeltine Elec (mfr and contr) part 1592-1218G1; (part of RF856).	For RF856

TABLE 8-3. MAINTENANCE PARTS LIST — Cont'd.

REF. DESIG.	NOTES	NAME AND DESCRIPTION	LOCATING FUNCTION
E809	C	ADAPTER, COAXIAL TO WAVEGUIDE: inner cross sectional dim. for associated waveguide 3-1/4 in. w by 6-1/2 in. h by 0.125 in. thk wall, for associated coaxial line 1.530 in. dia over-all; 2-3/4 in. lg by 3 in. dia over-all dim.; ITE Circuit Breaker Co (mfr) part 495013-1; Hazeltine Elec (contr) per mfr's part 495013-1.	Feed-horn coaxial connector
E810	C	ANTENNA ELEMENT: brass, silver plated; 5/16 in.-18 UNC-2A thd; 0.126 in. lg thd portion one end; other end female contact 1-5/16 in. deep; ITE Circuit Breaker Co (mfr) part 495017-1; Hazeltine Elec (contr) per mfr's part 495017-1.	Feed-horn internal conductor
E811	C	WALL, WAVEGUIDE: aluminum, alodine finish; ten 0.406 in. dia mtg holes, 3 holes ea end, spaced 9/16 in. from end, 11/16 in. from side of plate on 2.625 in. centers, two intermediate holes ea side spaced 4.000 in. centers from end holes; 9-5/8 in. lg by 6-5/8 in. w by 0.064 in. thk over-all dim.; ITE Circuit Breaker Co (mfr) part 495018-1; Hazeltine Elec (contr) per mfr's part 495018-1.	Waveguide wall
E812		PROBE SUBASSEMBLY: consists of, one conductor-center part 1594-1028P1, one contact part 1594-1057P1, one contact part 276-1155P2; over-all dim. 6-1/2 in. lg by 5/8 in. od; fitted to ea other and soldered; Hazeltine Elec (mfr and contr) part 1594-1058G1.	For RF854
E813	E	CONTACT, ELECTRICAL: phosphor bronze, silver plated; 2-5/8 in. lg by 5/8 in. dia over-all; Hazeltine Elec (mfr and contr) part 1592-1274P1; (part of RF851; same as E713).	For RF851
H801 through H805		Not used.	
H806	C	SCREW, CAP, SOCKET HEAD: stainless steel; C36 to C42 Rockwell hardness; case-hardened; cadmium plated; single chamfer; 0.312 in. dia of head, 0.190 in. h of head; socket recess data 0.158 in. w between flats; 10-24 NC Class 3 fit thd, 3/8 in. thd lg; 9/16 in. lg over-all; Hazeltine Elec (mfr and contr) part 207-1020P53.	For RF854
H807	C	WASHER, FLAT: rd shape; brass; Spec MIL-B-895; condition half hard; rd hole, 1.218 in. id by 1.625 in. od by 0.031 in. thk; Hazeltine Elec (mfr and contr) part 1594-1021P1.	For RF854
H808	C	WASHER, FLAT: rd shape; brass; Spec MIL-B-895; condition half hard; rd hole 1.015 in. id by 1.625 in. od by 0.031 in. thk; Hazeltine Elec (mfr and contr) part 1594-1021P2.	For RF854
H809	C	CLAMP, CABLE: used w/radio frequency cable assembly; aluminum alloy, green painted finish; irregular shape, over-all dim. 6-19/32 in. max lg by 3-1/4 in. w by 1-5/8 in. h by 1-1/8 in. id; eight 0.196 in. dia holes, 4 holes on one end spaced 2-7/8 in. by 1/2 in. mtg centers; 4 holes other end spaced 2 in. by 3/4 in. mtg centers; Hazeltine Elec (mfr and contr) part 2048-1018P2.	For RF854
J801		CONNECTOR, RECEPTACLE, ELECTRICAL: brass, silver plated; straight shape; one connector mating end; 2-1/8 in. lg by 1 in. dia over-all dim.; one end internally thd, 9/16 in.-24 NEF-2B thd, incl two 1/8 in. dia holes 180 deg apart 5/16 in. from end, other end externally thd, 3/4 in.-20 UNEF-2A thd; ITE Circuit Breaker Co (mfr) part 495032-901; Hazeltine Elec (contr) per mfr's part 495032-901.	For feed-horn

TABLE 8-3. MAINTENANCE PARTS LIST — Cont'd.

REF. DESIG.	NOTES	NAME AND DESCRIPTION	LOCATING FUNCTION
MP801	C	COUPLING, ANTENNA SECTION: fluted; brass, SAE 430A; cadmium plated; internal thd 1-1/4 in. -12 UNF-2 B; 2-1/2 in. od by 7/8 in. h over-all dim.; ITE Circuit Breaker Co. (mfr) part 495009-1; Hazeltine Elec (contr) per mfr's part 495009-1.	Couples antenna reflector section
MP802	C	INSERT, EXTERNALLY THREADED: brass, SAE 73; cadmium plated; 5/8 in. -11 UNC-2A thd one end; shoulder 13/16 in. lg by 7/8 in. dia, flange 3/16 in. thk by 1.125 in. od; other end 0.375 in. lg stud by 0.656 in. dia, tapered at 5 deg, 3/32 in. by 45 deg chamfer; 2-3/8 in. lg by 1.125 in. dia over-all dim.; ITE Circuit Breaker Co (mfr) part 495005-1; Hazeltine Elec (contr) per mfr's part 495005-1.	For securing antenna reflector sections
MP803	C	INSERT, EXTERNALLY THREADED: brass, SAE 73; cadmium plated; 5/8 in. -11 UNC-2A thd one end, 1-1/4 in. -12 UNF-2A thd other end w/0.656 in. dia core 3/4 in. d over-all, core 7/16 in. d w/3/32 in. by 45 deg chamfer core point 5/16 in. d; intermediate shoulder 1/8 in. lg by 1.2482 in. max, 1.2368 min dia; ITE Circuit Breaker Co (mfr) part 495004-1; Hazeltine Elec (contr) per mfr's part 495004-1.	For securing antenna reflector sections
MP804		COVER, ELECTRICAL CONNECTOR: aluminum cap and chain USMC green finish; 2-7/16 in. dia by 1/2 in. d; chain 5-3/4 in. lg c to c from rivet link to 0.187 in. id end link; 2-1/4 in. -16 internal coupling thd; w/gasket; Amphenol (mfr) part 9760-36; Hazeltine Elec (contr) part 492050-204 per ITE Circuit Breaker Co.	Feed-horn connector
MP805		COVER, ELECTRICAL CONNECTOR: aluminum cap and chain USMC green finish; 15/16 in. dia by 7/16 in. d; chain 2-9/16 in. lg c to c from rivet link to 0.125 in. id end link; 3/4 in.-20 internal coupling thd; w/gasket; Amphenol (mfr) part 9760-12; Hazeltine Elec (contr) part 492050-225 per ITE Circuit Breaker Co.	Cap for feed-horn assembly
MP806	C	STRAP, RETAINING: 2 holes; bronze; 1.64 in. nom cable size; one 0.316 in. dia hole and one 0.221 in. dia hole; nom dim. data, 0.820 in. h from base to inside of arch, 1.64 in. inside dia of arch, 2-7/8 in. distance between mtg holes, 3/16 in. thk; Hazeltine Elec (mfr and contr) part 1594-1039P1.	For RF854
MP807	C	COVER, ELECTRICAL CONNECTOR: metallic material resistant to corrosion; over-all dim. 1-5/8 in. lg by 2-1/4 in. dia; 2-1/4 in. -16 N-2 external thd; Hazeltine Elec (mfr and contr) part 1594-1040G1.	For RF854
MP808	C	SHELL, ELECTRICAL CONNECTOR: u/w rf cable assembly; principal parts, c/o 1 brass body, 1 brass coupling nut, 1 male receptacle; cylindrical shape, over-all dim. 6-27/64 in. lg by 2-5/8 in. od by 0.920 in. id; Hazeltine Elec (mfr and contr) part 1594-1061G1.	For RF854
MP809	C	KNOB: attached to stud by pin; approx 2-5/8 in. lg by 2 in. dia over-all dim.; aluminum coarse diamond knurled knob, alodine finish; stud, 3/8 in. -16 UNC-2A thd, half hard brass, cadmium plated; ITE Circuit Breaker Co (mfr) part 495043-901; Hazeltine Elec (contr) per mfr's part 495043-901.	Secures transit case sections
MP810		RING, RETAINING: carbon spring steel; 0.243 in. id by 0.025 in. thk; Waldes Kohinoor Inc (mfr) part X5133-31-MI; Hazeltine Elec (contr) part 362-1015P9.	For RF854
MP811	C	GASKET: brass, spec MIL-B-895, condition half hard; 0.918 in. dia of aperture by 1.132 in. od; 0.214 in. bearing surface w, 1-5/8 in. od of gage ring, 0.190 in. thk of od, 0.062 in. thk of gage ring; Hazeltine Elec (mfr and contr) part 1594-1024P1.	For RF854

TABLE 8-3. MAINTENANCE PARTS LIST — Cont'd.

REF. DESIG.	NOTES	NAME AND DESCRIPTION	LOCATING FUNCTION
MP812	C	RING, LOCKING: hold washer in body assembly; brass, bright alloy plated; rd shape, over-all dim. 1-3/4 in. od, 1.218 in. id, 0.187 in. thk; 1-3/4 in. -16 thd; four 0.156 in. dia holes equally spaced on 1.4375 in. dia bolt circle; Hazeltine Elec (mfr and contr) part 1594-1025P1.	For RF854
MP813		GASKET: rubber; 1-5/32 in. dia of aperture by 1-5/8 in. od by 1/4 in. thk; Hazeltine Elec (mfr and contr) part 1594-1020P1.	For RF854
MP814	C	SLEEVE, CONNECTOR: connects to body assembly; brass, Spec MIL-B-895, condition half hard, bright alloy plated; cylindrical shape, over-all dim. 1-5/8 in. lg by 1-3/4 in. od by 1.218 in. id; 1-3/4 in. -16 thd 1/4 in. lg at one end; 8-32 tapped hole 3/4 in. from other end; Hazeltine Elec (mfr and contr) part 1594-1022P1.	For RF854
O801	C	CASE, ANTENNA: Army-Navy Case, Antenna CY-1072/TPS-1G; aluminum; USMC green; 86-1/8 in. lg by 59 in. w by 58-1/2 in. h over-all dim.; items to be enclosed in case; c/o Hazeltine parts, 1 antenna reflector center section, (E801) part 495000-501, 1 antenna reflector left end section, (E804) part 495000-505, 1 antenna reflector right end section, (E805) part 495000-506; Spec MIL-R-0015895D (SHIPS) Amendment 2; ITE Circuit Breaker Co (mfr) part 495011; Hazeltine (contr) per mfr's part 495011.	Antenna case
O802	C	CASE, ANTENNA: Army-Navy Case, Antenna CY-1071/TPS-1G; aluminum; USMC green; 86-1/2 in. lg by 48 in. w by 54 in. h over-all dim.; items to be enclosed in case; Hazeltine parts, antenna reflector intermediate sections (E802 and E803) parts 495000-503 and 495000-504, 1 pair mountings (MT-960/TPS-1D) (O26) part 1620-5004G1, 1 folding chair (O21) part 495036-401; Spec MIL-R-0015895D (SHIPS) Amendment 2; ITE Circuit Breaker Co (mfr) part 495012; Hazeltine Elec (contr) per mfr's part 495012.	Antenna case
O803 through O806		Not used.	
O807	C	CASE, ANTENNA: Army-Navy Case, Antenna CY-2078/TPS-1G; with screened hatch; aluminum; USMC green; 86 in. lg by 48 in. w by 54 in. h over-all dim.; items to be enclosed in case; Hazeltine parts, 2 antenna reflector intermediate left and right sections (E802 and E803) parts 495000-503 and 495000-504, 1 pair mountings (MT-960/TPS-1D) (O26) part 1620-5004G1, 1 folding chair (O21) part 495036-401, 1 canvas shield (O29) part 1697-1009G1, 4 manila ropes (O25), 4 turnbuckle assemblies (O32) part 1592-1155P1, 4 anchor assemblies (O28) part 1592-1159P1; Spec MIL-R-0015895D (SHIPS) Amendment 2; ITE Circuit Breaker Co (mfr) part 495012-901 and 495012-905; Hazeltine Elec (contr) per mfr's parts 495012-901 and 495012-905.	Antenna case
O808 through O849		Not used.	
O850		GASKET: synthetic rubber; 1.754 in. dia of aperture by 1.996 in. od; Hazeltine Elec (mfr and contr) part 276-1155P6; (same as O703).	For RF854

TABLE 8-3. MAINTENANCE PARTS LIST — Cont'd.

REF. DESIG.	NOTES	NAME AND DESCRIPTION	LOCATING FUNCTION
P801 through P849		Not used.	
P850		CONNECTOR, PLUG, ELECTRICAL: type UG-59A/U; weatherproof; for RG-8/U, RG-9/U type cables; spec dwg RE49F225; Hazeltine Elec (contr) part UG-59A/U.	Part of W850
P851		Same as P850.	Part of W850
RF801 through RF850		Not used.	
RF851	C	LINE SECTION, RADIO FREQUENCY TRANSMISSION: adapter; bronze tubing, bright alloy plated, outside surfaces painted USMC green; "T" shaped; approx 12.814 in. lg by 6 in. w by 2-1/2 in. thk over-all; mounts by coupling nut w/internal thd 2-1/4 in. -16 N-2 on one end and adapter w/external thd 2-1/4 in. -16 N-2 on other end; marked "RF851"; Hazeltine Elec (mfr and contr) part 1594-5007G1.	Coaxial to cable adapter
RF852		LINE SECTION, RADIO FREQUENCY TRANSMISSION: u/w rigid coax lines; bronze conductor and brass coupling, bright alloy plated, outside surfaces painted USMC green; cylindrical shape; approx 2-1/2 in. dia by 3-11/16 in. lg over-all; mounting flange on 1 end w/4 mounting holes 1/4 in. -20 NC-2 spaced 90 deg apart on 2-7/16 in. dia circle; coupling nut other end w/2-1/4 in. -16 N-2 internal thd; incl synthetic rubber gasket; Hazeltine Elec (mfr and contr) part 1594-5002G1.	Adapter for 1-5/8 in. dielectric
RF852A		CONTACT, ELECTRICAL: for antenna adapter; bronze, silver plated; cylindrical shape; 0.625 in. dia by 3.849 in. lg over-all; Hazeltine Elec (mfr and contr) part 1594-1035G1.	Adapter for 1-5/8 in. dielectric
RF853		Same as RF852.	Adapter for 1-5/8 in. dielectric
RF853A		Same as RF852A.	Adapter for 1-5/8 in. dielectric
RF854	D	CABLE ASSEMBLY, RADIO FREQUENCY: Army-Navy Cable Assembly, Radio Frequency CG-900/U (8 ft. 0 in.); AN type cable RG-19/U; approx 6 ft. 6 in. lg excluding terminations; 8 ft lg over-all; 2 special identical connectors used, one ea end; c/o 4 clamps part 2048-1018P2, 2 outer body assemblies part 1594-1061G1, 1 cable part 1594-1060G1, 2 caps w/chains part 1594-1048G1, 2 gaskets part 276-1155P6, 2 sealing rings part 1594-1024P1, 2 washers part 1594-1021P2, 4 locking rings part 1594-1025P1, 2 gaskets part 1594-1020P1, 2 washers part 1594-1031P1 and 2 armor nuts; 1 cable clamp assembly c/o 1 retaining ring part 362-1015P9, 1 cap screw part 207-1020P53, 1 captive screw part 1594-1069P1, 1 connector clamp part 1594-1038P1; Hazeltine Elec (mfr and contr) part 1594-5003G1; (incl E810, H12, H18, H806, H807, H808, H809, MP801 through MP808 and O850).	Transmitter-Receiver to antenna base
RF855		LINE SECTION, RADIO FREQUENCY TRANSMISSION: c/o rf conductor assembly terminated at 2 ends in parts 1588-1250P1 Stud Support Cap, w/1588-1086P5 coaxial stub terminated in 1594-1019P1 coupling nut and 276-1155P2 contact, and w/1588-1086P5 coaxial stub terminated in 1588-1087P2 threaded adapter; approx 21-1/2 in. lg by 3 in. w by 5-5/8 in. h over-all; marked "RF855"; incl clamp hanger and bracket; outside surfaces painted USMC green; Hazeltine Elec (mfr and contr) part 1588-5018G1.	Transmitter to antenna

TABLE 8-3. MAINTENANCE PARTS LIST — Cont'd.

REF. DESIG.	NOTES	NAME AND DESCRIPTION	LOCATING FUNCTION
RF856		LINE SECTION, RADIO FREQUENCY TRANSMISSION: rotary joint upper section; c/o rf conductor assembly terminated in Hazeltine part 1588-1087P2, threaded adapter 1st end, 1592-1179P1 coupling nut 2nd end, 1588-1092P2 contact 3rd end; bronze, painted USMC green; "T" shaped; approx 13-7/8 in. lg by 4-1/8 in. w by 5-1/8 in. h over-all; mounts by terminations; marked "RF856", incl air tube; Hazeltine Elec (mfr and contr) part 1592-5016G1.	Rotary joint upper section for antenna pedestal
W801	C	HORN WAVEGUIDE: connector to waveguide by rigid coaxial fittings; brass, alodine finish; over-all throat dim.; 35-1/4 in. lg by 8-1/2 in. w by 13/16 in. deep; inside throat dim. 34-3/4 in. lg by 9-27/64 in. w by 12 in. deep; mouth, 18-9/32 in. lg by 8 in. w by 5/8 in. d; 35-7/8 in. lg over-all; ITE Circuit Breaker Co (mfr) part 495001-901; Hazeltine Elec (contr) per mfr's part 495001-901.	For receiving and transmitting
W802 through W849		Not used.	
W850	D	CABLE ASSEMBLY, RADIO FREQUENCY: CG-903/U (6' 9") coaxial; 52 ohms impedance; 7 stranded copper conductors, no. 21 AWG, 0.285 in. dia; polyethylene dielectric; double shield; Spec MIL-C-17B, type RG-9A/U; 6 ft. 9 in. lg over-all dim.; 6 ft. 4 in. lg excluding terminations, ea end terminated w/UG-59A/U connector plug; jacket designed for low loss temperature; Hazeltine Elec (mfr and contr) part 1594-5018G2; (incl P850 and P851).	Antenna base to IFF reflector

TABLE 8-3. MAINTENANCE PARTS LIST — Cont'd.

REF. DESIG.	NOTES	NAME AND DESCRIPTION	LOCATING FUNCTION
2401-2499 Series	E	TRANSFORMER, VARIABLE POWER: Army-Navy Transformer, Variable Power AN/TF-238/U; Hazeltine Elec (mfr and contr) part/dwg A-19559; Navy Spec MIL-R-0015895D (SHIPS) and Amendment 2.	
J2401		CONNECTOR, RECEPTACLE, ELECTRICAL: 2 contacts; 1 connector mating end; 2 female contacts, rd type; 135 amp, 700 vdc working, 500 vac working; dielectric material per MIL-C-5015B; straight shape; over-all dim. excl protruding contacts, 1-13/32 in. max lg by 1-3/4 in. w by 1-3/4 in. h; w/ inclosing shell, aluminum base alloy, resistant to corrosion; polarized; locking type, 1-1/2 in.-18 thd on shell for mating w/coupling nut; four 0.147 in. dia holes on 1-3/8 in. by 1-3/8 in. mtg centers; AN type AN3102C-24-9S; Hazeltine Elec (mfr and contr) part AN3102C-24-9S.	For power transformer assembly
J2402		Same as J2401.	For power transformer assembly
J2403 and J2404		Not used.	
J2405		CONNECTOR, RECEPTACLE, ELECTRICAL: 2 contacts; 1 connector mating end, 2 male contacts, pin type; 135 amp, 700 vdc working, 500 vac working; dielectric material per MIL-C-5015B; straight shape over-all dim. excl protruding contacts, 1-13/32 in. max lg by 1-3/4 in. w by 1-3/4 in. h; w/ inclosing shell, aluminum base alloy, resistant to corrosion; polarized; locking type, 1-1/2 in.-18 thd on shell for mating w/coupling nut; four 0.147 in. dia holes on 1-3/8 in. by 1-3/8 in. mtg centers; AN type, AN3102C-24-9P; Hazeltine Elec (mfr and contr) part AN3102C-24-9P.	For power transformer assembly
MP2401	A	GASKET: synthetic rubber, Spec JAN-R-1149, type 1, class 1; 1-3/4 in. lg by 1-3/4 in. w by 0.031 in. thk over-all; 1-3/8 in. dia of aperture; four 0.152 in. dia bolt holes spaced 1.375 by 1.375 in. c to c, ea bolt hole spaced 3/16 in. from outer edge, corners rounded on 3/16 in. radius; Hazeltine Elec (mfr and contr) part 287-1032P7.	For T2401
MP2402	C	FASTENER, LOCK; for locking cover; stainless steel; parts c/o wing headed stud, spring, spring holder; over-all dim. 1-7/64 in. lg by 23/32 in. w by 1/2 in. h; wing nut 23/32 in. lg by 15/32 in. w by 3/64 in. thk; Camloc Fastener Corp (mfr) part 2600-1W; Hazeltine Elec (contr) part/dwg FS-1122.	For locking cover
MP2403	C	GASKET: synthetic rubber, MIL Spec MIL-R-3065, grade SC-415FF; 8-1/8 in. lg of aperture by 4-7/8 in. w of aperture by 3/32 in. thk; 3/8 in. bearing surface w and lg, sixteen 0.156 in. dia bolt holes, 2-1/4 in. c to c distance between bolt holes along the w dim., 1-7/8 in. c to c distance between bolt holes along the lg dim.; 3/16 in. distance from outside edge to center of bolt holes; 5-5/8 in. w over-all by 8-7/8 in. lg over-all; Hazeltine Elec (mfr and contr) part/dwg GA-1813.	For T2401
MP2404	C	GASKET: synthetic rubber, MIL Spec MIL-R-3065, grade SC-415FF; 5-1/8 in. lg of aperture by 4-5/8 in. w of aperture by 3/32 in. thk; 1/2 in. bearing surface w and lg; eight 0.281 in. dia bolt holes, 2-5/16 in. c to c distance between bolt holes along the w dim., 3-1/4 in. from end bolt hole by 1-7/8 in. from other end bolt holes; 1/4 in. from outer edge to center of bolt holes; 5-1/8 in. w over-all by 5-5/8 in. lg over-all; Hazeltine Elec (mfr and contr) part/dwg GA-1815.	For T2402

TABLE 8-3. MAINTENANCE PARTS LIST — Cont'd.

REF. DESIG.	NOTES	NAME AND DESCRIPTION	LOCATING FUNCTION
MP2405	C	COVER, ELECTRICAL CONNECTOR: metallic material, resistant to corrosion; over-all dim. 0.744 in. max lg by 1.615 in. dia; 1-1/2 in.-18 internal thd; Scintilla Div. of Bendix Aviation Corp (mfr) part 10-37398-24; Hazeltine Elec (contr) part/dwg HC-1063.	For J2401, J2402 and J2405
MP2406	F	COVER PLATE, ACCESS: cover plate for transformer; aluminum alloy, alodine finish, painted USMC green; over-all dim. 9 in. lg by 5-3/4 in. w by 0.091 in. thk; four 4-40 thd holes and sixteen 0.169 in. dia holes; corners chamfered 1/8 in. by 1/8 in.; Hazeltine Elec (mfr and contr) part/dwg MSH-1516.	Cover plate for T2401
P2402 through P2404		Not used.	
P2405		CONNECTOR, PLUG, ELECTRICAL: 2 rd female contacts; one connector mating end; rated 135 amp, 700 v dc, 500 v ac; straight shape; aluminum, black anodized; 2.376 in. lg by 2.219 in. dia over-all; locking type; 1-1/2 in.-18 thd coupling nut; w/o conduit nut; 1-7/16 in.-18 external thd; pressurized; Spec MIL-C-5015B; AN type AN3106C-24-9S; Hazeltine Elec (contr) part 276-1170P2.	Cable termination W15
T2401		TRANSFORMER, VARIABLE, POWER: input, 100 to 130 v range, 380-420 cycles, single phase; output 13 amp, 0.98 kva; knob control; air-cooled; metal case; over-all dim. excl terminals 7-3/4 in. lg by 7-1/4 in. w by 5-3/8 in. deep; Saratoga Industries (mfr) part HA-1151-T; Hazeltine Elec (contr) part/dwg TR-1601.	For power transformer assembly
T2402		TRANSFORMER, POWER, STEP DOWN: fully inclosed metal case; primary winding term 1 and 2, 67 v, 400 cycles single phase; secondary winding, term 3 and 4, 12 v, 400 cycles, 76.5 amp, single phase; 500 v rms test; air-cooled; 6-3/8 in. lg by 5-9/16 in. deep by 4-1/8 in. h less terminations, 5-1/2 in. h over-all; Spec MIL-T-27A; Saratoga Industries (mfr) type TF1RX01YY; Hazeltine Elec (contr) part/dwg TR-1600.	For power transformer assembly
P2401		CONNECTOR, PLUG, ELECTRICAL: 2 contacts; 1 connector mating end; rd female contacts rated at 700 v dc, 500 v ac and 22 amps; 2-5/16 in. max lg by 1-23/32 in. max over-all dia; w/partially inclosing shell; aluminum alloy; polarized; locking type, 1-1/2 in.-18 coupling nut; Spec MIL-C-5015B; Amphenol (mfr) part AN3106A-24-9P; Hazeltine Elec (contr) part AN3106A-24-9P; (same as P404).	Cable termination W20

TABLE 8-3. MAINTENANCE PARTS LIST — Cont'd.

REF. DESIG.	NOTES	NAME AND DESCRIPTION	LOCATING FUNCTION
4301-4399 Series	E	SIGNAL COMPARATOR TEST SET: Army-Navy Signal Comparator Test Set, TS-1002/TPS-1G; Hazeltine Elec (mfr and contr) part/dwg A-19131; Navy Spec MIL-R-0015895D(SHIPS) and Amendment 2.	
C4301	B	CAPACITOR, FIXED, MICA DIELECTRIC: 500 v dc working; 5600 $\mu\mu$f, ±10%; low loss bakelite case; 51/64 in. w by 51/64 in. h by 5/16 in. deep; MIL-C-5A; MIL type CM35B562K.	Tuning meter by-pass
CR4301		SEMICONDUCTOR, DIODE: germanium type; body 0.300 in. lg max by 0.140 in. dia max; 2 tinned axial wire lead terminals, ea 1 in. lg; Spec MIL-E-1C, MIL type 1N127; Hazeltine Elec (contr) part 1N127; (same as CR301).	IF detector
J4301	B	CONNECTOR, RECEPTACLE, ELECTRICAL: 1 contact; 1 connector mating end; female contact; coaxial, plain type; 50 ohms characteristic impedance; low loss plastic insert; straight shape; 0.715 in. lg by 11/16 in. w by 11/16 in. h excluding terminal; w/partially inclosing copper base alloy shell; resistant to corrosion; precious metal plated; locking type, bayonet latch coupling; four no. 3-56 thd mtg holes on 1/2 in. by 1/2 in. mtg centers; Spec MIL-C-3608, type UG-290/U; Hazeltine Elec (contr) part 276-1061P1; (same as J153).	Coho Sync input receptacle
M4301		GALVANOMETER: panel type; dc; marked w/black line at normal zero and red line at nominal 50 μa position; hermetically sealed metal case; rd style; 2.695 in. max dia mtg flange, meter body 2.210 in. max dia by 1.86 in. deep behind flange less terminals; 2 screw-stud type terminals no. 8-32, 10-32 or 1/4 in.-28 by 0.500 min lg thd; 100 μa required for full scale deflection; calibrated for non-magnetic panel or magnetic steel panels 1/16 in. to 1/8 in. thk; scale markings on white background; self-contained; three mtg holes 0.125 in. dia spaced 120 deg apart on 1.22 in. radius in flange; 935 ohms ±10% dc resistance; meets requirements of MIL type MR26W100DCUA meter per Spec MIL-M-6A except as noted above; Hazeltine Elec (mfr and contr) part 1590-1111P1.	External tuning meter
R4301	B	RESISTOR, FIXED, COMPOSITION: 33,000 ohms ±5%; 1/2 w; F characteristic; body 0.416 in. max lg by 0.161 in. max od; insulated; Spec MIL-R-11A; MIL type RC20BF333J; Hazeltine Elec (contr) part 280-1015P127; (same as R1351).	V1350 screen dropping
R4302		RESISTOR, FIXED, COMPOSITION: 150 ohms ±5%; 1/2 w; F characteristic; body 0.416 in. max lg by 0.161 in. max od; insulated; Spec MIL-R-11A, MILtype RC20BF151J; Hazeltine Elec (contr) part 280-1015P43; (same as R1320).	V1305 cathode bias
TB4301	C	TERMINAL BOARD: laminated nylon; incl 8 terminals; turret type; 3-1/4 in. lg by 2-3/8 in. wide by 3/32 in. thk over-all excluding terminals; 4 no. 6-32 thd mtg holes spaced on 2.625 in. by 1.750 in. centers; marked by reference symbols; Hazeltine Elec (mfr and contr) part A-19121.	Component mounting
TP4301		CONNECTOR, RECEPTACLE, ELECTRICAL: single female contact; single mating end; black nylon; straight shape; 3/4 in. lg by 3/8 in. dia; single hole mtg w/1/4-32 NC-2 thd hex nut; E F Johnson (mfr) part 105-603-1; Hazeltine Elec (contr) part 276-1137G1; (same as TP152).	Test point
TP4302		CONNECTOR, RECEPTACLE, ELECTRICAL: single female contact; single mating end; red nylon; straight shape; 3/4 in. lg by 3/8 in. dia; single hole mtg w/1/4-32 NS-2 thd hex nut; EF Johnson (mfr) part 105-602-1; Hazeltine Elec (contr) part 276-1137G2; (same as TP101).	Test point

TABLE 8-4. STOCK NUMBER IDENTIFICATION

REF. DESIG.	STOCK NUMBER			
	FEDERAL	NAVY STOCK NUMBER	SIGNAL CORPS	AIR FORCE
1-99				
A11			2Z7091-627	
A12			2Z6820.416	
BT1	6135-120-1020	N6135-120-1020	3A30	
E13	6625-260-1440	N6625-260-1440	2Z307-140	
E14	6625-260-1441	N6625-260-1441	2Z307-138	
E15	6625-260-1442	N6625-260-1442	2Z307-139	
E16	5975-281-0393	N5975-281-0393	6Z3858-64	
E17	5975-281-0328	N5975-281-0328	6Z3858-66	
E18	5975-284-6100	N5975-284-6100	6Z3858-65	
E34	5935-258-1763	N5935-258-1763	2Z308-201	
E35	5935-643-9875	N5935-643-9875	2Z7390-29B	
E36	5935-204-8392	N5935-204-8392	2Z308-349	
E44				
E46				
E47				
E49				
H11			6L3804-20F	
H12			6L4774-36.81S	
H13	5935-280-2354	N5935-280-2354	2Z2642.793	
H15	5935-643-6610	N5935-643-6610	2Z2642.624	
H16	5935-280-2354	N5935-280-2354	2Z2642.625	
H18			2Z2642.585	
H19			6Z3809-34	
H20			6Z3809-46	
H21			6Z7852-3	
H22			6R37062	
H23	5120-242-3249	G5120-242-3249	6R59349	
H25			6R4561-1	
H26			6Q51735AH	
H27			6Q60229	
H28	5120-260-4837	G5120-260-4837	6R16091	
H29	3432-242-3383	G3432-242-3383	6R24677	
H30			6R36752	
H31			2Z7056-33	
H32			6L3522-12-28	
H33			6L4711-78	
H34			6R57414.10	
H35	5935-224-8150	N5935-224-8150	2Z2642.383	
H36	5325-282-6779	G5325-282-6779	6Z8585-6	
H37			6Z7852-8	
H38	5325-371-8099	G5325-371-8099	6Z3764-3	
H39			6Z8585-7	
H40			6R55516-18.4	
H41			6R55568.1	
H42	5970-184-2003	G5970-184-2003	6N8583	
H43	3432-163-4348	G3432-163-4348	6N7609-4	
H44	3432-163-4350	G3432-163-4350	6N7602-5	
H45			6Z8440-9	
H46			6R8440-8	
H47			6R39340	
H48			6R39340-1	
H49				
MP1				
MP2				
MP3				
MP4				
MP5				
MP7				
MP8				
MP9				
MP10				
MP11				

TABLE 8-4. STOCK NUMBER IDENTIFICATION — Cont'd.

REF. DESIG.	STOCK NUMBER			
	FEDERAL	NAVY STOCK NUMBER	SIGNAL CORPS	AIR FORCE
MP12				
MP13				
MP14				
MP15				
MP16				
MP19				
O17			2Z7090.125	
O18			2Z1409-276	
O21			6Z1817-1	
O22				
O23				
O24			6Z6621-2	
O25			6Z7901.1	
O26				
O27			2A1344-162	
O28	4030-141-7055	N4030-141-7055	5B125-5	
O29			3Z7702-68.1	
O30			2Z5727-183	
O31			2Z2309-11	
O32			6Z8782-4	
O33			3Z7702-68.2	
O34	5450-291-0412	N5450-291-0412	3Z7702-68	
O35			3Z7702-68.4	
O36			3Z7702-68.3	
O37			6Z3660-19	
O38				
O39			6F300-1060	
O40			2Z8877.670	
O41			2Z4394-9	
O43	6230-264-8261	N6230-264-8261	6Z4002D	
O44			6Z8900A-5	
O45			2Z1409-320	
O46	5340-598-5401	N5340-598-5401	2Z1409-315	
O47	3130-664-6244	N3130-664-6244	2Z1409-314	
O48			6F300-1297	
O49			2A1344-164	
O50			6Z7904A.2-1	
O51			2Z8051-77	
O52			2Z8051-78	
O53			2Z8051-79	
O54			2Z305-5	
P3	5935-201-3216	N5935-201-3216	2Z7390-21B	
W1			3E7350.1-180.13	
W2				
W3			3E7350-2.78.1	
W4			3E5999-7.28	
W4A			3E4002.23	
W5				
W6				
W7			3E7350.1-93.4	
W8	5995-549-9938	N5995-549-9938	3E7350.1-90.4	
W9			3E7350-2.237.3	
W10			3E7350.1-84.13	
W10A				
W11			3E7350-1.20.29	
W11A			3E4002.19	
W12			3E7350.1-93.3	
W13			3E7350-2.237.2	
W14			3E7350-2.237.2	
W15			3E4002.45	
W16			3E4002.45	
W17	6145-170-8737	N6145-170-8737		
W19				

TABLE 8-4. STOCK NUMBER IDENTIFICATION — Cont'd

REF. DESIG.	STOCK NUMBER			
	FEDERAL	NAVY STOCK NUMBER	SIGNAL CORPS	AIR FORCE
W20				
W28			1F425-5A	
W29	6145-170-8737	N6145-170-8737	1F425-9A	
W30	6145-186-1460	G6145-186-1460	1B805.2	
W31	6145-161-0880	N6145-161-0880	1F425-6	
W32	6145-192-7167	G6145-192-7167	1B4016-14	
W33	6145-192-7219	G6145-192-7219	1B3016-19.5	
W34	6145-192-7217	G6145-192-7217	1B3016-24.1	
W35			1F425-88A	
W36			1B302-45	
W37	6145-184-6116	N6145-184-6116	3E4001.35	
W45				
101-199			2Z6820.405	
A101			2Z8405-130	
A102	5340-369-7928	N5340-369-7928	2Z1244-205	
A103			2Z6820.370	
A104			2Z7091-61	
A106	5970-198-9311	G5970-198-9311	2Z7091-612	
A107	5970-198-9306	G5970-198-9306		
A108			2Z6820.409	
A109			2Z6820.406	
A110			2Z1244-204	
A111			2Z1244-267	
A112			2Z1244-206	
A113			2Z7091-610	
A114			2Z3351-322	
A116			2Z1578-44	
A118			2Z3351-371	
A119				
A120				
A121				
A122				
A123				
A124				
A125				
B151	4140-541-1121	N4140-541-1121	3H396-17	
C101	5910-112-7261	N5910-112-7261	3DA100-770	
C102	5910-160-1156	N5910-160-1156		
C104	5910-112-8187	N5910-112-8187	3K2027121	
C105	5910-112-7249	N5910-112-7249	3DA50-324	
C107	5910-112-7524	N5910-112-7524		
C109	5910-112-7619	N5910-112-7619		
C110	5910-280-6637	N5910-280-6637		
C111	5910-101-4890	N5910-101-4890		
C153	5910-188-1387	N5910-188-1387	3DB1-207	
C156	5910-112-7399	N5910-112-7399	3DB2-142	
C158	5910-189-5544	N5910-189-5544	3DB1E5-6	
C159	5910-665-4030	N5910-665-4030	3DA1-326	
E101	5940-171-0198	N5940-171-0198	3Z770-8.95	
E103			2Z3194-54	
E104	5970-296-5441	N5970-296-5441	3G3514-20	
E105	5970-151-8012	N5970-151-8012	3G3502-08	
E106	5970-280-4838	N5970-280-4838	3G3503-20.1	
E107	5970-151-8028	N5970-151-8028	3G3503-16	
E108	5970-222-6374	G5970-222-6374	3G320-305	
E109	5970-117-5146	N5970-117-5146	3G3502-12	
E110	5355-644-1700	N5355-644-1700	2Z5822-712	
E111			2Z7091-617	
E112	5970-296-4701	N5970-296-4701	3G3514-16	
E113	5970-644-2896	N5970-644-2896	3G320-307	
E114	5970-198-9312	G5970-198-9312	3G320-278	
E115			3Z770-6.118	
E116	5970-198-9312	G5970-198-9312	3G320-279	

TABLE 8-4. STOCK NUMBER IDENTIFICATION — Cont'd.

REF. DESIG.	STOCK NUMBER			
	FEDERAL	NAVY STOCK NUMBER	SIGNAL CORPS	AIR FORCE
E117	5970-198-9312	G5970-198-9312	3G320-280	
E118				
E119	5940-549-2785	N5940-549-2785		
E120	5970-151-7970	N5970-151-7970	3G3502-05	
E123			2Z8879-386	
E124			2Z8879-387	
E125			2Z8877.667	
E126			2Z8634-56	
E127			2Z8879-384	
E128			2Z8879-385	
E129	5940-239-7487	N5940-239-7487	3Z12101-8.1	
E151	5940-239-6573	N5940-239-6573	2Z9403.170	
E152	5940-243-7719	N5940-243-7719	3Z770-5.41	
E153				
E154	5960-262-0015	N5960-262-0015	2Z8304.57	
E155	5960-264-3004	N5960-264-3004	2Z8304.275	
H103	5305-637-4815	N5305-637-4815	6L4774-22SF	
H104				
H105	5305-206-5528	N5305-206-5528		
H106				
H107				
H108	5305-208-5923	N5305-208-5923	6L4774-14.81SF	
H109	5960-151-7568	N5960-151-7568	2Z2642.80	
H111	5960-246-4581	N5960-246-4581		
H112	5325-298-5903	N5325-298-5903	6ZK4877-6	
H113	5325-291-2366	N5325-291-2366	6Z4849D	
H114			6L50490-3	
H116			6L33038	
H117			6L50490-2	
H118			6Z4891-14	
H119	5325-185-0004	N5325-185-0004	6Z4910R	
H120	5960-249-4944	N5960-249-4944	2Z2642.521	
H122			6Z4856-38	
H123	5845-309-0198	N5845-309-0198	2Z8202.21	
H124			2Z7259-151	
H126			2Z6978-20	
H127	5840-309-7681	N5840-309-7681	2Z2642.685	
H128	5305-637-4675	N5305-637-4675	6L4774-28.8KSF	
H129			2Z4928-103	
H130			2Z6978-16	
H131			2Z4928-105	
H132			2Z6978-17	
H134	5310-209-3498	N5310-209-3498	6L58404-6	
H136			6Z4910Q-3	
H137				
H138				
H139				
H140	5340-598-4258	N5340-598-4258		
H141	5325-202-2520	N5325-202-2520	6Z4892-16	
H142				
H144			6Z5025-3	
H145				
H146				
H147			6L3946-20-2	
H148			6L3946-33	
H149			6L3505-18-9.10	
H151			6L2164-20	
H152			6L2720-24S	
H153				
H154	5935-201-4348	N5935-201-4348		
H155				
H156				
H157				

TABLE 8-4. STOCK NUMBER IDENTIFICATION — Cont'd

REF. DESIG.	STOCK NUMBER			
	FEDERAL	NAVY STOCK NUMBER	SIGNAL CORPS	AIR FORCE
H158				
H159				
H160				
H161				
H162				
HR151	4540-270-4522	N4540-270-4522	2Z5015-103	
I151	6240-179-1813	G6240-179-1813	2J991	
J151	5935-283-3418	N5935-283-3418	2Z3043-4	
J152	5935-149-3483	N5935-149-3483	2Z7390-58A	
J153	5935-636-8293	N5935-636-8293	2Z7390-290	
J155	5935-241-4068	N5935-241-4068	2Z3021-254	
K151	5945-204-6555	N5945-204-6555	2Z7587-304	
K152	5945-295-6992	N5945-295-6992	2Z7590-255	
L151	5950-647-6655	N5950-647-6655	3C575E-33	
L152			3C307-5.22	
MP101				
MP102				
MP103				
MP104				
MP105	5355-644-1199	N5355-644-1199		
MP106	5330-340-2095	N5330-340-2095	6Z8093-8	
MP107	5340-246-1583	N5340-246-1583		
MP108	5935-258-1767	N5935-258-1767		
MP109				
MP110				
MP111	5310-283-0947	N5310-283-0947		
MP112				
MP113				
MP114				
MP115				
MP116				
MP117				
MP118				
MP119				
MP120				
N101			2Z7091-562	
N102			2Z7091-613	
N104			2Z7090.142	
N105				
N106				
N107				
N108				
O102			2Z2712.266	
O103	5920-248-5386	N5920-248-5386	3Z1029-10.14	
O104	5330-171-3465	N5330-171-3465	2Z4868.1093	
O107			2Z8320-70	
O108	5330-200-6266	N5330-200-6266	2Z1866.486	
O109			2Z7091-561	
O110			2Z2935-160	
O111			2Z4868.1117	
O113			6L54003-25	
O114			2Z4867.784	
O115	5940-294-4359	N5940-294-4359	3Z1029-10.12	
O116	5970-198-9308	G5970-198-9308	2Z7091-618	
O117	4130-387-6618	N4130-387-6618	6Z1933-69	
O121				
O123	5330-244-9276	G5330-244-9276	2Z4868.1094	
O124			2Z7091-602	
O125	5340-265-9964	N5340-265-9964	2Z7858-154	
O126	5330-244-0191	G5330-244-0191	2Z4868.1112	
O127				
O128			2Z8877.669	
O129	6625-644-3176	N6625-644-3176	2Z8085-1.34	

TABLE 8-4. STOCK NUMBER IDENTIFICATION — Cont'd.

REF. DESIG.	STOCK NUMBER			
	FEDERAL	NAVY STOCK NUMBER	SIGNAL CORPS	AIR FORCE
O130			2Z4868.1090	
O131	5935-253-2430	N5935-253-2430	2Z4868.978	
O132	5330-290-0918	N5330-290-0918	2Z4868.1096	
O133	5330-244-0193	G5330-244-0193	2Z4868.1084	
O134			2Z7091-558	
O135	5940-151-4031	N5940-151-4031	2Z2712.199	
O136	5940-283-3752	N5940-283-3752	2Z2725.2	
O138			2Z4324-10	
O139	5840-313-1540	N5840-313-1540	2Z8879-363	
O140			2Z8063-29	
O142			2Z1409-287	
O144				
O145			6Z8900A-5	
O146			2Z1409-277	
O147				
R101	5905-299-2048	N5905-299-2048	3RC30BF102J	
R102	5905-299-1999	N5905-299-1999	3RC30BF154J	
R106	5905-192-0390	N5905-192-0390	3RC20BF105J	
R107	5905-279-1754	N5905-279-1754	3RC20BF155J	
R109	5905-249-4195	N5905-249-4195	3RC20BF103J	
R110	5905-263-2330	N5905-263-2330	2RV55054	
R111	5905-254-9201	N5905-254-9201	3RC20BF473J	
R112	5905-643-9816	N5905-643-9816	3RC30BF472J	
R113	5905-299-1995	N5905-299-1995	3RC30BF334J	
R118	5905-279-1719	N5905-279-1719	3RC30BF103J	
R120	5905-279-1757	N5905-279-1757	3RC20BF152J	
R125	5905-109-0216	N5905-109-0216	3RC30BF684J	
R127	5905-299-2000	N5905-299-2000	3RC30BF224J	
R128	5905-171-2004	N5905-171-2004		
R129	5905-107-5186	N5905-107-5186		
R130	5905-249-3661	N5905-249-3661		
R131	5905-279-3504	N5905-279-3504		
R132	5905-279-2515	N5905-279-2515		
R133	5905-171-1998	N5905-171-1998	3RC20BF333J	
R151	5905-107-8294	N5905-107-8294	3Z6809-5	
R152	5905-157-5574	N5905-157-5574	3RW14717	
R153	5905-279-2643	N5905-279-2643	3RC30BF101J	
R154	5905-279-2626	N5905-279-2626	3RC30BF681J	
R156	5905-100-2016	N5905-100-2016	3RW23737	
R157	5905-194-8837	N5905-194-8837	3Z6810-41	
R160	5905-299-2059	N5905-299-2059	3RC30BF332J	
R162	5905-299-2053	N5905-299-2053	3RC30BF221J	
R167	5905-279-8952	N5905-279-8952	3Z7498-25.100	
R168	5905-112-4532	N5905-112-4532	3RA5110	
R169	5905-283-4033	N5905-283-4033	3Z6250-142	
S101	5930-050-2680	N5930-050-2680	3Z9863-42A	
S151	5930-296-5981	N5930-296-5981	3Z9824-501.1	
S152	5930-050-2707	N5930-050-2707	3Z9863-52N	
S153	5930-548-7901	N5930-548-7901	3Z9812-7.2	
S154	5930-249-4556	N5930-249-4556	3Z9695-17.9	
S155	5930-249-4555	N5930-249-4555	3Z9695-17.10	
T101	5950-251-1597	N5950-251-1597	2Z9617-269	
T102	5950-250-7528	N5950-250-7528	2Z9627-185	
T103	5950-255-3512	N5950-255-3512	2Z9627-186	
T105	5950-519-8998	N5950-519-8998		
T151	5950-647-6763	N5950-647-6763	2Z4618-146	
T152	5950-648-1178	N5950-648-1178	2Z9617-272	
T153	5950-194-9002	N5950-194-9002		
T155	5950-519-4739	N5950-519-4739		
TB101				
TB102				
TB103				
TB104				

TABLE 8-4. STOCK NUMBER IDENTIFICATION — Cont'd

REF. DESIG.	STOCK NUMBER			
	FEDERAL	NAVY STOCK NUMBER	SIGNAL CORPS	AIR FORCE
TB105				
TB106				
TB107				
TB108				
TP101	5935-258-9894	N5935-258-9894	2Z3062-271	
TP152	5935-237-3960	N5935-237-3960	2Z3062-255	
V101	5960-188-3577	N5960-188-3577	2J6SN7WGT	
V103	5960-228-0033	N5960-228-0033	2J6AG7	
V105	5960-262-0210	N5960-262-0210		
V106	5960-262-0185	N5960-262-0185		
V151	5960-116-9960	N5960-116-9960	2J371B	
V155	5960-166-7685	N5960-166-7685	2J4B31	
V156	5960-548-9851	N5960-548-9851	2J5C22	
W101			2Z6191-14	
W103			2Z558-68	
XI151	6250-508-5842	N6250-508-5842	2Z5883-261	
XV101	5935-201-4783	N5935-201-4783	2Z8678.74	
XV105	5935-160-1365	N5935-160-1365	2Z8679.30	
XV106	5935-259-1944	N5935-259-1944	2Z8677.94	
XV151	5935-229-5668	N5935-229-5668	2Z8674.175	
XV155	5935-229-5673	N5935-229-5673	2Z8674.147	
Z101	5840-519-4737	N5840-519-4737	2Z3607A-11	
Z151	5915-376-8945	N5915-376-8945	2Z1891-20.39	
Z153	5915-155-7628	N5915-155-7628	3Z1891-35.18	
Z161	5915-346-4695	N5915-346-4695	2Z6840-162	
201-299				
501-599				
A221			2Z3351-498	
A501	5340-369-7928	N5340-369-7928	2Z8405-130	
A502			2Z1244-267	
A503			2Z6820.503	
A504			2Z6820.370	
A505			2Z6820.391	
A506			2Z7090.190	
A507			2Z7090.189	
A512			2Z6820.502	
A514			2Z3351-322	
A516			2Z1927-37	
A517	5840-665-0045	N5840-665-0045	2Z1927-30	
A518			2Z6820.406	
A519				
A520			2Z7091-631	
A521			2Z1239.296	
A522			2Z1239.288	
A524			2Z1239.287	
A525			2Z6820-417	
A526			2Z1239.294	
A527			2Z1239.286	
A528			2Z3351-374	
A529	5910-666-6725	N5910-666-6725	2Z1244-207	
A530			2Z1239.295	
A531			2Z380-129	
A532			2Z1244-309	
A533	5340-597-6504	N5340-597-6504		
B501			3H396-17	
B502	6105-238-2962	N6105-238-2962		
C222	5910-196-0525	N5910-196-0525	3DA1.500-62	
C230	5910-101-4890	N5910-101-4890	3K2047121	
C240	5910-112-8248	N5910-112-8248	3D9045V-15	
C501	5910-197-8218	N5910-197-8218		
C503	5910-284-5023	N5910-284-5023	3DB750-2	
C504	5910-101-4758	N5910-101-4758		
C507	5910-817-5801	N5910-817-5801	3DB1-186	

TABLE 8-4. STOCK NUMBER IDENTIFICATION — Cont'd.

REF. DESIG.	STOCK NUMBER			
	FEDERAL	NAVY STOCK NUMBER	SIGNAL CORPS	AIR FORCE
C509	5910-644-5863	N5910-644-5863	3DA5-238	
C510	5910-191-3072	N5910-191-3072		
C512	5910-189-5544	N5910-189-5544	3DB1E5-6	
C513	5910-194-8756	N5910-194-8756	3DA250-606	
C516	5910-262-8407	N5910-262-8407	3DA100-972	
C518	5910-252-1814	N5910-252-1814	3D9075-43	
C522	5910-112-7432	N5910-112-7432	3DB10-206	
C523	5910-112-7117	N5910-112-7117		
C525	5910-196-5149	N5910-196-5149	3DA100-718	
C527	5910-644-0731	N5910-644-0731	3D9470-48	
C532	5910-245-0328	N5910-245-0328	3DA4.700-21	
C534	5910-112-7408	N5910-112-7408	3DA500-451	
C535	5910-184-5995	N5910-184-5995	3K3410321	
CR501	6130-295-2289	N6130-295-2289	3H4860-196	
CR502				
E221	5940-177-7933	N5940-177-7933	3Z12050-6.10	
E222			6L31209-4	
E223	5960-262-0015	N5960-262-0015	2Z8304.57	
E249	5940-243-9293	N5940-243-9293	3Z12101-8.4	
E256	5960-262-0345	N5960-262-0345		
E258		N16-T-28218-4176	3Z12101-22.4	
E259				
E501	5999-643-8012	N5999-643-8012	6C8b-1	
E502	5940-258-5647	N5940-258-5647	3Z770-17.28	
E503	5940-239-6573	N5940-239-6573	2Z9403.170	
E505A			2Z4028-17	
E505B			2Z4028-16	
E506	5995-173-6132	N5995-173-6132	2Z2712.320	
E508	5970-198-9306	G5970-198-9306	3G320-347	
E509	5970-222-6371	G5970-222-6371		
E510			2Z3822-756	
E512				
E517	5340-301-0133	N5340-301-0133	3G100-293	
E520	5935-665-4841	N5935-665-4841	2Z3191-424	
E522	5970-310-7051	N5970-310-7051	3G100-229	
E523	5985-387-2725	N5935-387-2725	2Z3262-77	
E524	5935-204-6171	N5935-204-6171	2Z3191-426	
E526	5935-204-6168	N5935-204-6168	2Z3191-423	
E527	5955-372-3414	F5955-372-3414	2XH19.3	
E528	5970-284-8062	N5970-284-8062	3G280-46	
E529	5935-665-4845	N5935-665-4845	2Z3191-427	
E533	5970-198-9312	G5970-198-9312	3G320-358	
E534	5935-249-3319	N5935-249-3319	3H5236-3	
E535	5970-198-9312	N5970-198-9312	3G320-278	
E537	5940-239-7487	N5940-239-7487	3Z12101-8.1	
E538	5960-188-1541	N5960-188-1541	2Z8308-38	
E539			2Z8877.667	
E540			2Z8634-56	
E541				
E542				
E547			2Z8877.675	
E548			2Z8877.673	
E549			2Z8877.674	
E550	5970-151-8012	N5970-151-8012	3G3502-08	
E551			2Z8304.317	
E552			2Z3194-85	
E553	5940-235-8503	N5940-235-8503		
E554	5970-285-0067	N5970-285-0067	3G80-11	
E555	5975-309-0641	N5975-309-0641	3G320-342	
E556	5940-258-5185	N5940-258-5185	3Z12101-8.3	
E558	5935-258-1763	N5935-258-1763	2Z308-201	
E559	5970-311-1438	N5970-311-1438	3G100-250	
E562	5975-636-4408	N5975-636-4408	2Z7090.216	

TABLE 8-4. STOCK NUMBER IDENTIFICATION — Cont'd

REF. DESIG.	STOCK NUMBER			
	FEDERAL	NAVY STOCK NUMBER	SIGNAL CORPS	AIR FORCE
E563	5840-312-0996	N5840-312-0996	2Z9057-82	
E565	5970-117-5197	N5970-117-5197	3G1350-126	
E566			3G100-291	
H221			6L20130-21S	
H223			6L20130-18F	
H501	5310-209-3440	N5310-209-3440	6L58406-5	
H502	5305-698-8507	N5305-698-8507	6L20926-24.81	
H503	5305-637-4815	N5305-637-4815	6L4774-22SF	
H504	5305-637-5314	N5305-637-5314	6L4770-12.8SF	
H505	5305-637-4675	N5305-637-4675	6L4774-28.8KSF	
H508	5325-639-2612	N5325-639-2612	6Z4872	
H509			6L50373	
H510			6L50373-2	
H513				
H517			6L604-3.7H	
H520			2Z4928-103	
H521			2Z6978-16	
H522			6Z4892-19	
H525	5310-209-3498	N5310-209-3498	6L58404-6	
H527			6L10925-56.81	
H528			2Z6978-23	
H529			6L3946-202	
H530				
H531			6L3946-33	
H533	5355-284-5546	N5355-284-5546	2Z5822-645	
H534	5840-093-5414	N5840-093-5414	2Z1409-301	
H535	5840-093-5413	N5840-093-5413	2Z1409-299	
H538	5340-696-8053	N5340-696-8053	6Z6917-8	
H539			6L3514-16-17	
H540	5340-598-0503	N5340-598-0503	2Z2636-47	
H541	5340-248-2334	N5340-248-2334	2Z2642.243	
H542	5340-178-1085	N5340-178-1085	2Z2642.210	
H543	5340-178-1099	N5340-178-1099	2Z2542.209	
H544	5845-252-4403	N5845-252-4403	2ZK2636-2	
H546	5960-151-7568	N5960-151-7568	2Z2642.80	
H547	5325-276-6209	N5325-276-6209	6Z4910Q-1	
H548	5325-290-3785	N5325-290-3785	6Z4892-21	
H549			6Z3809-46	
H550			6Z7852-3	
H551			6Z3809-32	
H552			6L2164-20	
H553			6L3905-16.1	
H554			2Z2642.592	
H555			2Z2642.588	
H556			6L4774-40.86	
H557			6L2720-24S	
H558	5340-310-6850	N5340-310-6850	2Z7858-328	
H561			2Z1480.83	
H562	5840-665-3388	N5840-665-3388	2Z1409-289	
H563	5340-310-6730	N5340-310-6730	2Z1409-300	
H564			6L4766-9.3SF	
H565			2Z2642.6459	
H566			2Z2642.650	
H568	5970-313-8205	N5970-313-8205		
H569			6L3602-56-3S1	
H571			6Z3809-45	
HR501	4540-270-4522	N4540-270-4522	2Z5015-103	
I501	6240-179-1813	G6240-179-1813	2J991	
J224	5935-636-8293	N5935-636-8293	2Z7390-290	
J228	5935-149-2733	N5935-149-2733	2Z3025-55	
J501	5935-149-4155	N5935-149-4155	2Z7390-19B	
J503	5935-149-3483	N5935-149-3483	2Z7390-58A	
J505	5935-241-4068	N5935-241-4068	2Z3021-254	

TABLE 8-4. STOCK NUMBER IDENTIFICATION — Cont'd.

REF. DESIG.	STOCK NUMBER			
	FEDERAL	NAVY STOCK NUMBER	SIGNAL CORPS	AIR FORCE
J508	5935-201-4162	N5935-201-4162	2Z3046.28	
J511	5935-295-4789	N5935-295-4789	2Z3062-285	
J517	5935-280-2928	N5935-280-2928	2Z3062-188	
K501	5945-258-9313	N5945-258-9313		
L221	5950-519-8998	N5950-519-8998		
L222	5950-519-4763	N5950-519-4763		
L224	5950-372-2429	N5950-372-2429	3C1084Z19-46	
L227				
L228	5950-647-9217	N5950-647-9217	3C1084Z19-49	
L230	5950-372-2409	N5950-372-2409		
L501	5950-645-3295	N5950-645-3295	3C575E-28	
L502	5950-645-3301	N5950-645-3301	3C575E-39	
L504	5950-645-1437	N5950-645-1437	3C575E-41	
L505	5950-392-6734	N5950-392-6734	3C1084Z19-43	
L506	5950-645-4090	N5950-645-4090	3C1084Z19-44	
L507	5950-645-4079	N5950-645-4079	3C323-192B	
L508	5950-368-3597	N5950-368-3597	3C1084Z19-41	
L510	5950-392-6733	N5950-392-6733	3C1084Z19-42	
M501	6625-250-7015	N6625-250-7015	3F871-32	
M502	6625-635-4242	N6625-635-4242	3F901-59	
MP201				
MP202	5970-295-7655	G5970-295-7655		
MP501				
MP502				
MP503				
MP504				
MP505				
MP506				
MP507				
MP508				
MP509	5970-222-6371	G5970-222-6371		
MP510				
MP511				
MP512				
MP513				
MP514				
MP515				
MP516				
MP517				
MP518				
MP519				
N501				
N502			2Z3723-354	
N503			2Z7091-562	
O501	5330-187-3633	G5330-187-3633	6L54006-19	
O503	5920-296-7738	N5920-296-7738	3Z1029-10.13	
O504	5920-248-5386	N5920-248-5386	3Z1029-10.14	
O505			6L54003-25	
O507			2Z1612.16	
O508	5935-253-2430	N5935-253-2430	2Z4868.978	
O509	5330-309-0262	N5330-309-0262	2Z4868.1110	
O510	5330-244-0191	G5330-244-0191	2Z3868.114	
O512			2Z1607-113	
O513	5330-290-0918	N5330-290-0918	2Z4868.1096	
O514	5840-308-5003	N5840-308-5003	2Z8201.83	
O515	5330-050-1218	G5330-050-1218	2Z4866.351	
O516	5935-295-6343	N5935-295-6343	2Z1619-12	
O517			2Z7091-602	
O518			2Z8552-119	
O520			2Z7090.191	
O521			2Z8320-74	
O522			2Z8320-77	
O523	4130-387-6618	N4130-387-6618	6Z1933-69	

TABLE 8-4. STOCK NUMBER IDENTIFICATION — Cont'd

REF. DESIG.	STOCK NUMBER			
	FEDERAL	NAVY STOCK NUMBER	SIGNAL CORPS	AIR FORCE
O524			2Z1409-275	
O525	5330-244-0191	G5330-244-0191	2Z4868.1112	
O526			2Z8879-371	
O527			2Z8877.805	
O528	3110-100-6210	N3110-100-6210		
O529				
O530	5910-248-5301	N5910-248-5301	2Z2712.262	
O531	5335-644-1104	N5335-644-1104	2Z5822-693	
O532			2Z8203-662	
O533			2Z3876.151	
O537			2Z4868.1117	
O540	5330-340-2095	N5330-340-2095	6Z8093-8	
O542	5840-313-1540	N5840-313-1540	2Z8879-363	
O546			2Z1409-294	
O547	5310-511-5653	N5310-511-5653	6L3432-16-1	
O551	5935-333-3831	N5935-333-3831	2Z8276-73	
O552	5310-568-2816	N5310-568-2816	6L3426-40-8	
O553	5315-276-5906	N5315-276-5906	6L3942-3-2	
O555	5985-387-2716	N5985-387-2716	3F3703-7	
O556	5970-284-7218	N5970-284-7218	3G80-10	
O562	5970-284-8096	N5970-284-8096	3G80-9	
O564	5315-598-8641	N5315-598-8641	2Z8051-66	
O568			2Z4324-10	
O570	5340-301-0074	N5340-301-0074	3G100-247	
O571	5340-663-2125	N5340-663-2125	3G100-248	
O573			2Z1409-287	
O574			2Z7091-558	
O576			2Z4867.784	
O577	5340-265-9964	N5340-265-9964	2Z7858-154	
O578	5340-664-1911	N5340-664-1911	2Z7858-270	
O579	5995-283-2574	N5995-283-2574	2Z2712.53	
O581			2Z8063-30	
O582			2Z8877.668	
O583			2Z4868.1090	
O584				
O585			2Z8063-29	
O586			2Z1409-277	
O587			2Z8877.658	
O588	5840-644-0847	N5840-644-0847	2Z760-22	
O589			2Z8879-364	
O590			2Z4868.1126	
O592	5330-244-0193	G5330-244-0193	2Z4868.1084	
O594			2Z6820.468	
O595			2Z8276-88	
O596			6Z8900A-5	
O597	5355-284-5551	N5355-284-5551	2Z5822-700	
O598	5355-284-5550	N5355-284-5550	2Z5822-699	
P224	5935-149-4066	N5935-149-4066	2Z7390-88	
P228	5935-280-2833	N5935-280-2833	2Z8675.34	
P503	5935-149-3983	N5935-149-3983	2Z7390-18B	
P505	5935-568-0851	N5935-568-0851	2Z7390-182A	
P508			2Z3082-99	
P511	5935-173-5895	N5935-173-5895	2Z7390-260	
P516A	5935-201-8089	N5935-201-8089		
R226	5905-279-1760	N5905-279-1760	3RC20BF620J	
R228				
R229	5905-190-8889	N5905-190-8889	3RC20BF101J	
R231	5905-279-3513	N5905-279-3513	3RC20BF221J	
R236	5905-279-3504	N5905-279-3504	3RC20BF472J	
R501	5905-299-1993	N5905-299-1993	3RC30BF474J	
R505	5905-299-2003	N5905-299-2003	3RC30BF104J	
R507	5905-264-8784	N5905-264-8784	3RW11721	
R508			3Z6960-43.4	

TABLE 8-4. STOCK NUMBER IDENTIFICATION — Cont'd.

REF. DESIG.	STOCK NUMBER			
	FEDERAL	NAVY STOCK NUMBER	SIGNAL CORPS	AIR FORCE
R508A	5905-279-2617	N5905-279-2617	3RC30BF105J	
R509	5905-279-8297	N5905-279-8297	3Z6002-84	
R510	5905-279-4981	N5905-279-4981	3Z6010-238	
R514	5905-279-7960	N5905-279-7960	3Z6630-118	
R515	5905-264-8773	N5905-264-8773	3RW6333	
R516	5905-191-6405	N5905-191-6405	3RW16542	
R517	5905-112-6705	N5905-112-6705	3RW24320	
R518	5905-279-6432	N5905-279-6432	3RW15002	
R520	5905-171-1998	N5905-171-1998	3RC20BF333J	
R521	5905-112-6715	N5905-112-6715		
R522	5905-279-2624	N5905-279-2624	3RC30BF225J	
R523	5905-279-2652	N5905-279-2652	3RC30BF155J	
R524	5905-195-6492	N5905-195-6492	2Z141-1	
R526				
R534	5905-195-6754	N5905-195-6754	2RC42BF473J	
R535	5905-299-2048	N5905-299-2048	3RC30BF102J	
R536	5905-279-1724	N5905-279-1724	3RC30BF151J	
RF501	5960-296-5948	N5960-296-5948	2Z10008-179	
RF502	5985-696-7988	N5985-696-7988	2Z10008-172	
RF503	5840-665-3272	F5840-665-3272	2Z1926-3	
RF503A	5985-642-8749	N5985-642-8749	2Z10008-178	
S501	5930-257-0007	N5930-257-0007	3Z9695-8.20	
S502	5930-239-3634	N5930-239-3634	3Z9823-3.12	
S504	5930-548-7901	N5930-548-7901	3Z9812-7.2	
S505	5930-249-4555	N5930-249-4555	3Z9695-17.10	
S506	5930-247-8277	N5930-247-8277	3Z9825-62.673	
T222	5950-346-9181	N5950-346-9181		
T223	5950-539-6781	N5950-539-6781		
T501	5950-647-5248	N5950-647-5248		
T502	5950-645-6963	N5950-645-6963	2Z9627-189	
T503	5950-645-0952	N5950-645-0952	2Z9617-275	
T504	5950-257-1624	N5950-257-1624	2Z9617-268	
TB501				
TB502				
TB503				
TB504				
TP501	5935-237-3960	N5935-237-3960	2Z3062-255	
TP502	5935-258-9894	N5935-258-9894	2Z3062-271	
TY501	5905-296-7512	N5905-296-7512	3Z6925-3.33	
U502				
V222	5960-247-8748	N5960-247-8748		
V224				
V501	5960-188-8612	N5960-188-8612		
V502	5960-107-8133	N5960-107-8133	2J5J26	
V503	5960-263-9910	N5960-263-9910		
V505	5960-116-9926	N5960-116-9926	2J2C40	
W501			3E4001.30	
W502				
W503				
W504				
W507				
W508			2Z558-80	
W509				
XI501	6250-508-5842	N6250-508-5842	2Z5883-261	
XTY501	5935-160-1364	N5935-160-1364	2Z8670.33	
XV222	5935-201-8529	N5935-201-8529		
XV224	5935-259-1944	N5935-259-1944	2Z8677.99	
XV501	5935-222-9871	N5935-222-9871		
XV505	5935-351-9777	N5935-351-9777	2C5611-19	
XV505A	5935-201-4783	N5935-201-4783	2Z8678.74	
Z221				
Z501	5915-376-8942	N5915-376-8942	3Z1891-87	
Z504	5915-376-8956	N5915-376-8956	3Z1891-20.38	

TABLE 8-4. STOCK NUMBER IDENTIFICATION — Cont'd

REF. DESIG.	STOCK NUMBER			
	FEDERAL	NAVY STOCK NUMBER	SIGNAL CORPS	AIR FORCE
Z509	5840-303-4589	N5840-303-4589	2C5130-212-1	
Z510			3Z9695-39	
Z511	5840-308-4908	N5840-308-4908	2C5612-11	
301-399				
1301-1399				
2301-2399				
3301-3399				
A301				
A302	5340-597-6464	N5340-597-6464	2Z8405-127	
A303			3Z12501-7	
A304			2Z3351-325	
A305				
A306				
A2353			2Z6820.448	
A2354			2Z1244-267	
A2355			2Z6820.449	
A2357			2Z6820.447	
B2350	6105-643-2220	N6105-643-2220	3H3000A02-62	
B2350A	4450-203-3548	N4450-203-3548	3H345-2	
C301	5910-196-0525	N5910-196-0525	3DA1.500-62	
C302	5910-112-8272	N5910-112-8272	3D9151	
C305	5910-126-1619	N5910-126-1619	3D9025V-82	
C306	5910-160-1159	N5910-160-1159	3K2027021	
C307	5910-644-0731	N5910-644-0731	3D9470-48	
C310	5910-245-0328	N5910-245-0328	3DA4.700-21	
C332	5910-197-1560	N5910-197-1560	3D9006-28	
C333	5910-101-4821	N5910-101-4821	3D9010-63	
C334	5910-197-1566	N5910-197-1566	3D9022.5	
C339	5910-101-4890	N5910-101-4890	3K2047121	
C1350	5910-112-8187	N5910-112-8187	3K2027121	
C1353	5910-112-8248	N5910-112-8248	3D9045V-15	
C1358	5910-184-5995	N5910-184-5995	3K3510321	
C1363	5910-160-1158	N5910-160-1158	3K203312	
C1365	5910-644-6169	N5910-644-6169		
C1367	5910-666-6228	N5910-666-6228	3DA500-814	
C2350	5910-642-6773	N5910-642-6773	3DB1-137	
C2351	5910-112-7774	N5910-112-7774	3D9039-8	
C3305	5910-112-7625	N5910-112-7625		
C3306	5910-280-6637	N5910-280-6637		
C3308				
C3312				
C3313				
C3314	5910-101-3990	N5910-101-3990		
C3315	5910-636-2074	N5910-636-2074		
C3316	5910-184-1537	N5910-184-1537		
C3318	5910-101-5627	N5910-101-5627		
CR301				
E310				
E311	5960-262-0015	N5960-262-0015	2Z8304.57	
E312	5960-272-9094	N5960-272-9094	2Z8304.276	
E313	5960-669-8808	N5960-669-8808	2Z8304.277	
E314	5960-264-3004	N5960-264-3004	2Z8304.275	
E315	5960-501-0802	N5960-501-0802	2Z8304.297	
E316			3Z12101-22.4	
E317			6L31209-4	
E318	5970-222-6374	G5970-222-6374	3G320-305	
E319			3Z12101-22.6	
E320	5975-636-4408	N5975-636-4408	2Z7090.216	
E2351	5940-177-9887	N5940-177-9887	3Z770-3.82	
E2355	5970-198-9312	G5970-198-9312	3G320-282	
E2356	5355-644-2124	N5355-644-2124	2Z5821-178	
E2358			2Z8677.178	
E2359			2Z8877.681	

TABLE 8-4. STOCK NUMBER IDENTIFICATION — Cont'd.

REF. DESIG.	STOCK NUMBER			
	FEDERAL	NAVY STOCK NUMBER	SIGNAL CORPS	AIR FORCE
E2360			2Z7090.131	
E2361			2Z8677.177	
E2362				
E2364	5935-258-7751	N5935-258-7751	6Z1932-43	
E2365	5935-201-7181	N5935-201-7181	6Z1932-56	
E2368	5935-201-3715	N5935-201-3715	2Z2642.600	
E2371	5935-249-3319	N5935-249-3319	3H5236-3	
E2374	5935-249-3312	N5935-249-3312	2Z8276-70	
E2376A				
E2378	5935-228-9139	N5935-228-9139	2Z2999.16	
H301	5845-309-0198	N5845-309-0198	2Z8202.21	
H302			2Z6978-20	
H303				
H304				
H306			6L10925-56.81	
H307	5305-698-8507	N5305-698-8507	6L20926-24.81	
H308	5305-637-4815	N5305-637-4815	6L4774-22SF	
H309				
H310				
H311				
H312				
H313	5975-160-4920	N5975-160-4920	2Z6820.538	
H314			2Z4928-103	
H315	5310-209-3440	N5310-209-3440	6L58406-5	
H316			6Z5025-3	
H317			2Z6978-23	
H318			6L3946-20-2	
H319				
H320				
H321			6L3946-33	
H322			6L17006-30.8K	
H323				
H324				
H1301	5325-286-5809	N5325-286-5809	6Z4895	
H1302	5325-276-6209	N5325-276-6209	6Z4910Q-1	
H1303	5325-290-3785	N5325-290-3785	6Z4892-21	
H1305	5310-209-3498	N5310-209-3498	6L58404-6	
H1306			2Z6978-16	
H1307	5305-637-4675	N5305-637-4675	6L4774-28.8KSF	
H1308			6L58408	
H1309			6L4770-15.8KSF	
H1310				
H1311			3G385-65	
H2351	5960-246-4581	N5960-246-4581	3H948.5-1	
H2352			2Z2642.171	
H2360			6L3905-16.1	
H3300				
HR2351	4540-270-4522	N4540-270-4522	2Z5015-103	
J302	5935-149-3483	N5935-149-3483	2Z7390-58A	
J307	5935-280-2928	N5935-280-2928		
J310	5935-643-6897	N5935-643-6897		
J350	5935-636-8293	N5935-636-8293	2Z7390-290	
K3300	5945-259-9884	N5945-259-9884	2Z7592-117	
L301	5950-387-1456	N5950-387-1456	3C1084Z19-37	
L302	5950-645-4079	N5950-645-4079	3C323-192B	
L303	5950-645-3249	N5950-645-3249	3C1084Z19-38	
L304	5950-648-1132	N5950-648-1132	3C1084Z19-39	
L306	5950-309-5351	N5950-309-5351	3C1084Z19-18	
L307	5950-387-0460	N5950-387-0460	3C307-5.24	
L308	5950-645-4806	N5950-645-4806	3C323-192T	
L351	5950-219-6512	N5950-219-6512	3C1084Z19-19	
L355	5950-266-9045	N5950-266-9045	3C1084Z19-20	
L358	5950-255-2938	N5950-255-2938	3C1084Z19-21	

TABLE 8-4. STOCK NUMBER IDENTIFICATION — Cont'd

REF. DESIG.	STOCK NUMBER			
	FEDERAL	NAVY STOCK NUMBER	SIGNAL CORPS	AIR FORCE
L1301	5950-257-3806	N5950-257-3806	3C1084Z19-22	
L1302	5950-266-0627	N5950-266-0627	3C1084Z19-23	
L1303	5950-265-0941	N5950-265-0941	3C1084Z19-32	
L1304	5950-265-0177	N5950-265-0177	3C323-18R	
L1309	5950-263-1709	N5950-263-1709	3C1084Z19-24	
L1352	5950-265-0658	N5950-265-0658		
L1355	5950-268-8822	N5950-268-8822	3C1084Z19-26	
L1356	5950-219-6578	N5950-219-6578	3C1084Z19-27	
L1358	5950-263-1708	N5950-263-1708	3C1084Z19-28	
L1362	5950-256-7354	N5950-256-7354	3C1084Z19-29	
L1363	5950-265-0942	N5950-265-0942	3C1084Z19-30	
L2311	5950-265-0970	N5950-265-0970	3C1084Z19-31	
M2350	6625-250-7015	N6625-250-7015	3F871-32	
MP301	8040-273-8716	G8040-273-8716		
MP302				
MP303	8040-273-8716	G8040-273-8716		
MP304				
MP305				
MP306				
MP307				
O301	5330-340-2095	N5330-340-2095	6Z8093-8	
O302	5935-259-2563	N5935-259-2563	2Z3350-123	
O303			2Z1612.16	
O304			2Z2712.266	
O305	5330-244-0193	G5330-244-0193	2Z4868.1123	
O306	5935-253-2430	N5935-253-2430		
O307			2Z4866.570	
O309			2Z8877.701	
O312	5840-313-1540	N5840-313-1540	2Z8879-363	
O313	5330-187-3633	G5330-187-3633	6L54006-19	
O315			2Z8063-42	
O316	5340-265-9964	N5340-265-9964	2Z7858-154	
O317			2Z1409-287	
O318			2Z6820.468	
O319			6Z8900A-5	
O1301	5920-177-1700	N5920-177-1700	3Z1013.11	
O1304			6L54003-25	
O1306				
O1307			2Z4868.1090	
O1308				
O1309	5330-244-0192	G5330-244-0192	2Z4868.1124	
O1311	5330-298-6930	N5330-298-6930	2Z4868.979	
O1312	5330-309-0262	N5330-309-0262	2Z4868.1110	
O2352			2Z7091-602	
O3301	5940-260-0455	N5940-260-0455	2Z2712.88	
P301			2Z3082-100	
P302	5935-149-3983	N5935-149-3983	2Z7390-18B	
P307	5935-149-4066	N5935-149-4066	2Z7390-88	
P308	5935-173-5895	N5935-173-5895	2Z7390-260	
P310	5935-244-9919	N5935-244-9919		
R301	5905-252-4018	N5905-252-4018	3RC20GF470J	
R302	5905-279-3513	N5905-279-3513	3RC20BF221J	
R303	5905-195-6806	N5905-195-6806	3RC20BF102J	
R304	5905-190-8883	N5905-190-8883	3RC20BF100J	
R305	5905-279-1876	N5905-279-1876	3RC20BF222J	
R307	5905-195-9457	N5905-195-9457	3RC20BF332J	
R310	5905-254-9201	N5905-254-9201	3RC20BF473J	
R312	5905-195-6761	N5905-195-6761	3RC20BF104J	
R314	5905-643-9816	N5905-643-9816	3RC30BF472J	
R324	5905-190-8889	N5905-190-8889	3RC20BF101J	
R325	5905-249-4195	N5905-249-4195	3RC20BF103J	
R329	5905-299-2036	N5905-299-2036	3RC30BF682J	
R351	5905-299-2018	N5905-299-2018	3RC30BF333J	

TABLE 8-4. STOCK NUMBER IDENTIFICATION — Cont'd.

REF. DESIG.	STOCK NUMBER			
	FEDERAL	NAVY STOCK NUMBER	SIGNAL CORPS	AIR FORCE
R353	5905-279-1757	N5905-279-1757	3RC20BF152J	
R1315	5905-299-2053	N5905-299-2053	3RC30BF221J	
R1320	5905-107-5186	N5905-107-5186	3RC20BF151J	
R1321	5905-518-6723	N5905-518-6723		
R1324	5905-171-2004	N5905-171-2004	3RC20BF223J	
R1350	5905-192-0379	N5905-192-0379	3RC20BF334J	
R1351	5905-171-1998	N5905-171-1998	3RC20BF333J	
R1356	5905-279-3504	N5905-279-3504	3RC20BF472J	
R1359	5905-192-0390	N5905-192-0390	3RC20BF105J	
R1362	5905-190-8885	N5905-190-8885	3RC20BF225J	
R1365	5905-299-1625	N5905-299-1625	3RV45041	
R1367	5905-195-5571	N5905-195-5571	3RC20BF680J	
R1370			3RC20BF471J	
R1372	5905-195-6791	N5905-195-6791	3RC20BF681J	
R2323				
R2350	5905-252-4149	N5905-252-4149	3RV32517	
R3304	5905-279-2515	N5905-279-2515	3RC20BF474J	
R3311				
R3319	5905-243-6821	N5905-243-6821	3RC20BF153J	
R3324	5905-192-0377	N5905-192-0377	3RC20BF394J	
R3325	5905-195-9483	N5905-195-9483	3RC20BF154J	
R3340				
R3345	5905-279-3505	N5905-279-3505	3RC20BF392J	
R3364	5905-185-8490	N5905-185-8490	3RC20BF475J	
R3365	5905-192-0667	N5905-192-0667	3RC20BF224J	
S2351	5930-249-4555	N5930-249-4555	3Z9695-17.10	
S2352	5930-249-4556	N5930-249-4556	3Z9695-17.9	
S2353	5930-296-9164	N5930-296-9164	3Z9825-62.701	
S2354	5930-548-3487	N5930-548-3487	3Z9825-125.1	
S2355	5930-501-0390	N5930-501-0390	3Z9815-17	
T301	5950-376-9723	N5950-376-9723	3C1084Z19-36	
T1301	5950-648-0228	N5950-648-0228	3C1084Z19-35	
T2350	5950-251-1582	N5950-251-1582		
TB301				
TB302				
TP301	5935-201-5983	N5935-201-5983	2Z3062-167	
V301	5960-262-1357	N5960-262-1357		
V1305	5960-248-3089	N5960-248-3089		
V1306	5960-262-0185	N5960-262-0185		
V1350	5960-262-0152	N5960-262-0152		
V1353	5960-262-0210	N5960-262-0210		
V1355				
V3300	5960-262-3763	N5960-262-3763		
V3305	5960-262-0167	N5960-262-0167		
V3306				
V3308	5960-228-0033	N5960-228-0033		
W2350	5840-504-9140	N5840-504-9140		
W2351	5915-311-3317	N5915-311-3317	2Z6840-173	
W2353			3E4001.23	
W2354	6145-161-0913	N6145-161-0913	1F425-62A	
W2355	6145-161-0911	N6145-161-0911	1F425-59A	
W2356	6145-161-0909	N6145-161-0909	1F425-58A	
W2357				
W2358				
XV301	5935-259-1944	N5935-259-1944	2Z8677.94	
XV1353	5935-160-1365	N5935-160-1365	2Z8677.99	
XV3308	5935-201-4783	N5935-201-4783	2Z8678.74	
Z2350	5985-240-0666	N5985-240-0666	2Z395.100	
Z2351	5915-296-0854	N5915-296-0854		
Z3301				
401-499			5840-571-1846	
A401			3H3900.16	
A402			2Z1244-267	
A403			3H3900.15	

TABLE 8-4. STOCK NUMBER IDENTIFICATION — Cont'd

REF. DESIG.	STOCK NUMBER			
	FEDERAL	NAVY STOCK NUMBER	SIGNAL CORPS	AIR FORCE
A404			2Z6820.413	
A405			3H3900.17	
A406			3H3900.18	
A407	5910-666-0087	N5910-666-0087	2Z1239.155	
A408	5910-666-6725	N5910-666-6725	2Z1244-207	
A409			2Z6820.370	
A410			2Z6820.391	
A411				
A412	5970-198-9308	G5970-198-9308	3H3900.19	
A413				
A415	5340-291-8855	N5340-291-8855	2Z8405-129	
A417				
A418			3H759-17	
A423			2Z3351-322	
A425			2Z6820.449	
B401	6105-643-2220	N6105-643-2220	3H3000A02-62	
B401A	4450-203-3548	N4450-203-3548	3H345-2	
C401	5910-112-8459	N5910-112-8459	3DB6-59	
C402	5910-129-6260	N5910-129-6260	3DB1-83	
C403	5910-227-0312	N5910-227-0312	3DB650-3	
C404	5910-112-7636	N5910-112-7636	3DA250-326	
C405	5910-112-7432	N5910-112-7432	3DB10-206	
C409	5910-112-7399	N5910-112-7399	3DB2-142	
CR401	6130-635-2045	N6130-635-2045	3H4860-197	
CR402	6130-295-2049	N6130-295-2049	3H4860-198	
E401	5940-245-1867	N5940-245-1867	3Z770-17.22	
E403	5940-256-4288	N5940-256-4288	3Z770-14.70	
E404	5940-549-3332	N5940-549-3332	3Z770-16.63	
E405	5940-239-6573	N5940-239-6573	2Z9403.170	
E406				
E407				
E408	5960-272-9094	N5960-272-9094	2Z8304.276	
E409	5960-669-8808	N5960-669-8808	2Z8304.277	
E410	5970-198-9312	G5970-198-9312	3G320-301	
E411	5940-239-7487	N5940-239-7487	3Z12101-8.1	
E412			3Z12101-22.6	
E413	5970-198-9312	G5970-198-9312	3G320-303	
E415	5970-222-6374	G5970-222-6374	3G320-305	
E416	5970-198-9312	G5970-198-9312	3G320-278	
E417	5920-696-8228	N5920-696-8228	3Z3282-42.30	
E418	5935-249-3319	N5935-249-3319	3H5236-3	
E419				
E420	5940-259-8598	N5940-259-8598		
F401	5920-199-4009	N5920-199-4009	3Z2601F6.1	
F403	5920-199-4016	N5920-199-4016	3Z2604.10	
F404	5920-199-4019	N5920-199-4019	3Z2606.23	
F407				
F408	5920-699-1926	N5920-699-1926	3ZK2615.13	
F411	5920-230-9097	N5920-230-9097	3Z2660.14	
F412	5920-280-3181	G5920-280-3181	3Z2660.13	
F414	5920-221-4559	G5920-221-4559	3Z2630.22	
F417				
FL417				
H401	5305-637-4675	N5305-637-4675	6L4774-28.8KSF	
H402	5120-596-2483	N5120-596-2483	6R7382-1	
H403	5305-206-6028	N5305-206-6028	6L4768-15.8KSF	
H404			2Z4928-103	
H405			2Z4928-105	
H406	5310-209-3498	N5310-209-3498	6L58404-6	
H407	5325-276-6209	N5325-276-6209	6Z4910Q-1	
H408	5960-249-4930	N5960-249-4930	2Z2642.533	
H409			6L58353-2	
H410				
H411				

TABLE 8-4. STOCK NUMBER IDENTIFICATION — Cont'd.

REF. DESIG.	STOCK NUMBER			
	FEDERAL	NAVY STOCK NUMBER	SIGNAL CORPS	AIR FORCE
H412				
H413				
H414	5325-185-0004	N5325-185-0004	6Z4910R	
H415	5845-309-0198	N5845-309-0198	2Z8202.21	
H416				
H417			2Z6978-16	
H418			2Z6978-20	
H419	5305-637-4815	N5305-637-4815	6L4774-22SF	
H420			2Z6978-23	
H421			6L3946-33	
H423			6L10925-56.81	
H424			6Z5025-3	
H425				
H426	5305-698-8507	N5305-698-8507	6L20926-24.81	
H427				
H428				
H429				
H431	5325-249-6338	N5325-249-6338	6Z4892-20	
H432	5325-298-5903	N5325-298-5903	6ZK4877-6	
H433			6Z5036-2	
H434				
H435				
H436			6L3905-16.1	
H437			6L3514-16-17	
H438			3G385-69	
H439	5305-313-3537	N5305-313-3537	6L4774-11	
H440			6L3505-18-9.10	
H441				
H442				
H443				
H444				
H445				
H446				
H447				
H448				
H449				
H450				
H453			2Z6978-17	
H455			6L2164-20	
H456	5310-209-3440	N5310-209-3440	6L58406-5	
H460				
H461				
H462				
HR401	4540-270-4522	N4540-270-4522	2Z5015-103	
I401	6240-223-9100	G6240-223-9100	2Z5888-6	
I417	6240-179-1813	G6240-179-1813	2J991	
I418	6210-299-6112	N6210-299-6112	2Z6125-147	
J401	5935-283-3419	N5935-283-3419	2Z3042-22	
J402	5935-280-2114	N5935-280-2114	2Z3032-39	
J403	5935-283-3422	N5935-283-3422	2Z3046.29	
J404	5935-201-4165	N5935-201-4165	2Z3022-154	
J406	5935-283-3418	N5935-283-3418	2Z3043-4	
J407	5935-257-9739	N5935-257-9739	2Z3046.27	
J408	5935-201-4162	N5935-201-4162	2Z3046.28	
J409				
J410	5935-283-1269	N5935-283-1269	2Z5534	
J411	5935-201-3851	N5935-201-3851	2Z3023-91	
J412	5935-510-0471	N5935-510-0471	2Z3070-57	
J413	5935-149-3483	N5935-149-3483	2Z7390-58A	
J420	5935-346-2028	N5935-346-2028	2Z3068-38	
J422	5935-643-6897	N5935-643-6897		
K401	5945-255-7144	N5945-255-7144	2Z7598-174	
K402	5945-295-6992	N5945-295-6992	2Z7590-255	

TABLE 8-4. STOCK NUMBER IDENTIFICATION — Cont'd

REF. DESIG.	STOCK NUMBER			
	FEDERAL	NAVY STOCK NUMBER	SIGNAL CORPS	AIR FORCE
K403	5945-295-6644	N5945-295-6644	2Z7590-57	
K405	5945-244-4299	N5945-244-4299	2Z7593-167	
L401	5950-645-1482	N5950-645-1482	3C575E-34	
L402	5950-645-1199	N5950-645-1199	3C575E-35	
L403	5950-645-5878	N5950-645-5878	3C575E-36	
L404	5950-645-5862	N5950-645-5862	3C575E-37	
M401	6625-643-1516	N6625-643-1516	3F8150-147	
M402	6645-171-4349	N6645-171-4349	3F3363-6.1	
M403	6625-643-2415	N6625-643-2415	3F3310-2.6	
MP401				
MP402				
MP404				
MP416				
MP417	8040-273-8716	G8040-273-8716		
MP418				
MP443				
O401	5330-198-6163	G5330-198-6163	2Z4868.722	
O402	5330-640-9903	N5330-640-9903	2Z4868.1086	
O403			6L54003-25	
O404	5935-549-1200	N5935-549-1200	2Z1619-121	
O405	5935-303-4327	N5935-303-4327	3H5236-2	
O406	5330-244-0191	G5330-244-0191	2Z4868.1302	
O407			2Z1612.16	
O409			3H4328-2.2	
O410			2Z8877.805	
O411			2Z8677.176	
O412	5330-244-9277	G5330-244-9277	2Z4868.1087	
O413	5330-292-0880	G5330-292-0880		
O414	5935-196-1432	N5935-196-1432	2Z1612.8	
O415	5935-280-2231	N5935-280-2231	2Z1607-10	
O419	5935-189-4908	N5935-189-4908	2Z1619-50	
O420	5330-292-0880	G5330-292-0880		
O421	5330-292-0880	G5330-292-0880		
O422	5330-292-0880	G5330-292-0880		
O423	5330-292-0880	G5330-292-0880		
O424	5330-292-0880	G5330-292-0880		
O425			2Z4868.1089	
O426			2Z7091-561	
O427			2Z7091-558	
O428			3H4328-2.1	
O429			2Z7091-602	
O430			2Z7091-606	
O431			2Z2712.271	
O432	5940-258-1797	N5940-258-1797	3Z1029-10.11	
O433	5910-248-5301	N5910-248-5301	2Z2712.262	
O434	6625-644-3176	N6625-644-3176	2Z8085-1.34	
O435	5310-283-0947	N5310-283-0947	2Z7857-8	
O436				
O437	5330-187-3633	G5330-187-3633	6L54006-19	
O439	5935-253-2430	N5935-253-2430		
O440	5935-187-4291	N5935-187-4291	2Z1612	
O441	5330-292-0880	G5330-292-0880		
O442			2Z8063-29	
O444	4130-387-6618	N4130-387-6618	6Z1933-69	
O445			2Z2712.266	
O446	5840-313-1540	N5840-313-1540	2Z8879-363	
O447			2Z1409-287	
O448			6Z4182-8	
O449			2Z4867.784	
O451			2Z4868.1090	
O452			2Z1409-290	
O454			2Z8877.658	
O459			2Z6820.468	

TABLE 8-4. STOCK NUMBER IDENTIFICATION — Cont'd.

REF. DESIG.	STOCK NUMBER			
	FEDERAL	NAVY STOCK NUMBER	SIGNAL CORPS	AIR FORCE
O460	5340-598-2148	N5340-598-2148	2Z7858-327	
O461				
O462	5940-258-1797	N5940-258-1797	3Z1029-10.2	
O463	5330-244-9276	G5330-244-9276	2Z4866.599	
O464	5330-309-0262	N5330-309-0262	2Z4868.1110	
P401			2Z3082-100	
P402			2Z3073-36	
P403	5935-283-3850	N5935-283-3850	2Z3082-98	
P404	5935-201-2713	N5935-201-2713	2Z3083-20	
P406			2Z3082-97	
P407	5935-295-5066	N5935-295-5066	2Z3082-101	
P408			2Z3082-99	
P413	5935-149-3983	N5935-149-3983	2Z7390-18B	
P420				
P422	5935-244-9919	N5935-244-9919		
R401	5905-299-2003	N5905-299-2003	3RC30BF104J	
R402				
R403	5905-112-6715	N5905-112-6715	3RW20713	
R404	5905-191-6405	N5905-191-6405	3RW16542	
R405	5905-643-9816	N5905-643-9816	3RC30BF472J	
R415	5905-299-2010	N5905-299-2010	3RC30BF683J	
R416	5905-299-1625	N5905-299-1625	3RV45041	
R417	5905-299-2013	N5905-299-2013	3RC30BF473J	
R424				
R427	5905-299-2000	N5905-299-2000	3RC30BF224J	
R429	5905-299-2028	N5905-299-2028	3RC30BF153J	
R434	5905-299-2022	N5905-299-2022	3RC30BF223J	
R435	5905-299-2018	N5905-299-2018	3RC30BF333J	
R443	5905-158-7529	N5905-158-7529	3RP6908	
R445	5905-171-1998	N5905-171-1998	3RC20BF333J	
R446	5905-253-1215	N5905-253-1215	3RC20BF750J	
R448	5905-299-1965	N5905-299-1965	3RC20BF301J	
R450	5905-279-3513	N5905-279-3513	3RC20BF221J	
R451	5905-644-5484	N5905-644-5484	3RW29723	
R453	5905-299-1993	N5905-299-1993	3RC30BF474J	
R454	5905-254-7101	N5905-254-7101	3RC42BF104J	
R458	5905-299-1995	N5905-299-1995	3RC30BF334J	
R459	5905-192-3973	N5905-192-3973	3RC20BF471J	
S401	5930-050-2680	N5930-050-2680	3Z9863-42A	
S402	5930-548-7901	N5930-548-7901	3Z9812-7.2	
S403	5930-249-4555	N5930-249-4555	3Z9695-17.10	
S404	5930-050-2704	N5930-050-2704	3Z9863-52K	
T401	5950-256-5828	N5950-256-5828	2Z9617-266	
T402	5950-254-0014	N5950-254-0014	2Z9618-144	
T403	5950-251-1589	N5950-251-1589	2Z9617-267	
TB401				
TB402				
TB403				
TB404				
TB405				
TB406				
V401	5960-262-0148	N5960-262-0148		
V407	5960-262-0181	N5960-262-0181		
V410	5960-166-7667	N5960-166-7667	2J6AH6	
V411	5960-262-0964	N5960-262-0964	2J6A2	
V411 Alt.	5960-262-0964	N5960-262-0964		
V414	5960-114-3808	N5960-114-3808	2J6Y6G	
XF417				
XI401	6210-299-4537	N6210-299-4537	2Z5991-254	
XI417	6250-508-5842	N6250-508-5842	2Z5883-261	
XV401	5935-160-1364	N5935-160-1364	2Z8670.33	
XV410	5935-259-1944	N5935-259-1944	2Z8677.94	

TABLE 8-4. STOCK NUMBER IDENTIFICATION — Cont'd

REF. DESIG.	STOCK NUMBER			
	FEDERAL	NAVY STOCK NUMBER	SIGNAL CORPS	AIR FORCE
601-699				
1601-1699				
2601-2699				
A601			2Z6820.377	
A602			2Z3351-306	
A603			2Z7091-578	
A604			2Z4868.1183	
A605			2Z6820.391	
A606			2Z1244-204	
A607			2Z8051-62	
A608	5910-194-7802	N5910-194-7802	2Z6820.223	
A609	5910-666-0084	N5910-666-0084	2Z1239.169	
A610			2Z6820.376	
A611				
A612			2Z6820.414	
A613			2Z5091-116	
A615	5930-501-3799	N5930-501-3799	2Z6820-407	
A616	5340-209-9267	N5340-209-9267	2B275-8	
A617	5910-236-2622	N5910-236-2622	2Z1239.189	
A618	5930-501-3798	N5930-501-3798	2Z6820.411	
A619	5930-201-4708	N5930-201-4708	2Z6820.412	
A620			2Z3351-322	
A621			2Z4884A-9	
A622			2Z4884A-10	
A623				
A624			6F216	
A626				
A627				
B601	6105-643-2220	N6105-643-2220	3H3000A02-62	
B601A	4450-203-3548	N4450-203-3548	3H345-2	
B602		Z17-M061791-1301	3H3000S-176	
C601	5910-112-7399	N5910-112-7399	3DB2-142	
C602	5910-129-6260	N5910-129-6260		
C603	5910-101-4016	N5910-101-4016	3K3510221	
C605	5910-112-7261	N5910-112-7261	3DA100-770	
C606	5910-112-7625	N5910-112-7625	3DA100-720	
C610	5910-160-5324	N5910-160-5324	3K2036143	
C612	5910-191-9340	N5910-191-9340	3K3568153	
C613	5910-183-9260	N5910-183-9260	3K3513253	
C615	5910-190-9665	N5910-190-9665	3K3539253	
C616	5910-184-0151	N5910-184-0151	3K3520253	
C617	5910-101-4013	N5910-101-4013	3K3510253	
C621	5910-101-5789	N5910-101-5789	3K3522221	
C622	5910-101-5652	N5910-101-5652	3K2062032	
C623	5910-112-7355	N5910-112-7355	3DA500-821	
C625	5910-101-5818	N5910-101-5818	3K3582221	
C628				
C629	5910-112-7619	N5910-112-7619	3DA50-292	
C630	5910-817-5801	N5910-817-5801	3DB1-186	
C631	5910-112-7298	N5910-112-7298	3DA50-305	
C632	5910-160-1158	N5910-160-1158	3K2033121	
C644	5910-112-7408	N5910-112-7408	3DA500-451	
C645				
C646	5910-191-9640	N5910-191-9640	3K2022121	
C648	5910-190-9591	N5910-190-9591	3K2022143	
C654	5910-184-5747	N5910-184-5747	3K3582253	
C659	5910-126-1618	N5010-126-1618	3D9007V-17	
C660	5910-160-7152	N5910-160-7152	3D9005-135	
C661	5910-197-1392	N5910-197-1392	3DA100-983	
C662	5910-112-7093	N5910-112-7093	3DB1-306	
C665				
C666	5910-666-7144	N5910-666-7144		
CR601				

TABLE 8-4. STOCK NUMBER IDENTIFICATION — Cont'd.

REF. DESIG.	STOCK NUMBER			
	FEDERAL	NAVY STOCK NUMBER	SIGNAL CORPS	AIR FORCE
E601	5940-272-5786	N5940-272-5786		
E602	5910-171-0165	N5910-171-0165	2Z770-6.58	
E603				
E604				
E607				
E608	5355-284-5583	N5355-284-5583	2Z5822-713	
E609	5355-644-1700	N5355-644-1700	2Z5822-712	
E611	5970-198-9312	G5970-198-9312	3G320-281	
E617				
E618	5977-556-3734	N5977-556-3734	2Z8877.644	
E620			3Z12101-22.6	
E621	5970-151-8012	N5970-151-8012	3G3502-08	
E622	5970-198-9308	G5970-198-9308	3G320-309	
E623			3G100-221	
E625	5960-262-0015	N5960-262-0015	2Z8304-57	
E626	5960-264-3004	N5960-264-3004	2Z8304.275	
E627	5970-222-6374	G5970-222-6374	3G320-305	
E628A			3Z770-72.2	
E629A			3Z770-76.1	
E630A			3Z770-67.1	
E631A			3Z770-23.5	
E632A			3Z770-13.20	
E633A				
E636				
E637				
E638			2Z2712.348	
E640			2Z8634-56	
E641	5970-117-5197	N5970-117-5197	3G1350-126	
E642	5960-272-9094	N5960-272-9094	3Z8304.276	
E643	5970-296-4701	N5970-296-4701	3G3514-16	
H602			6L73499	
H603			6Z4892-15	
H604	5330-202-3722	N5330-202-3722	6L54028	
H606	6625-265-9692	N6625-265-9692	2ZA1352-204	
H607	5965-387-6869	N5965-387-6869	2B275-9	
H609	5310-209-1911	N5310-209-1911	6L3676-32-10	
H610	5305-637-5312	N5305-637-5312	6L4774-27.8KS	
H614			6L4770-15.8KSF	
H615	5840-309-7681	N5840-309-7681	2Z2642.686	
H616				
H617			2Z4928-103	
H618	5840-309-7681	N5840-309-7681	2Z2642.685	
H621	5325-286-5809	N5325-286-5809	6Z4895	
H623			6L50490-4	
H624	5960-249-4947	N5960-249-4947	2Z2642.527	
H625	5325-249-6338	N5325-249-6338	6Z4856-51	
H626	5960-246-4581	N5960-246-4581	3H948.5-1	
H627	5845-309-0198	N5845-309-0198	2Z8202.21	
H628	5310-209-3498	N5310-209-3498	6L58404-6	
H629			6L58408	
H630			2Z6978-20	
H632	5305-637-4815	N5305-637-4815	6L4774-22SF	
H635				
H643			6Z5025-3	
H644	5305-641-9414	N5305-641-9414	6L4774-20.8KSF	
H645			2Z6820.423	
H646			2Z6820.424	
H648			2Z6978-23	
H649			6L3946-20-2	
H652			6L3946-33	
H653	5305-207-4938	N5305-207-4938	6L4774-27.8KSF	
H654			6L3945-20	
H655				

TABLE 8-4. STOCK NUMBER IDENTIFICATION — Cont'd

REF. DESIG.	STOCK NUMBER			
	FEDERAL	NAVY STOCK NUMBER	SIGNAL CORPS	AIR FORCE
H658			2Z8085-1.43	
H662	9330-281-2998	G9330-281-2998	2ZA1352-209	
H663	5355-644-2430	N5355-644-2430	2Z5822-711	
H664			2Z7258.114	
H670			6L4906-16.81SF	
H671				
H672				
H673				
H674				
H675				
H676				
H677				
H678	5330-244-0191	G5330-244-0191		
H679	5330-244-0101	G5330-244-0191		
H682				
H684			6L2614-20	
H685				
HR601	4540-270-4522	N4540-270-4522	2Z5015-103	
I601	6240-155-8706	G6240-155-8706	2Z5952	
I610	6240-223-9100	G6240-223-9100	2Z5888-5	
I611	6210-299-6112	N6210-299-6112	2Z6125-147	
I612	6210-250-5472	N6210-250-5472	2Z6125-197	
J601	5935-257-9739	N5935-257-9739	2Z3046.27	
J602	5935-283-1269	N5935-283-1269	2Z5534	
J603	5935-237-3964	N5935-237-3964		
L601	5950-648-2535	N5950-648-2535	3C2009D	
L602	5950-387-1929	N5950-387-1929	3C2012-8	
L603	5950-254-9756	N5950-254-9756	3C307-5.23	
L604	5915-665-1939	N5915-665-1939	3Z1891-54.1	
M601	6625-250-7015	N6625-250-7015	3F871-32	
MP601				
MP602	9330-281-9876	G9330-281-9876		
MP603				
MP604				
MP605				
MP606				
MP607				
MP608				
MP609	5325-290-1962	N5325-290-1962		
MP610	5325-639-2612	N5325-639-2612		
MP611				
MP612				
MP613				
MP614				
MP615				
MP616				
MP617				
MP618				
MP619				
MP620	5330-244-0192	G5330-244-0192		
MP621	5330-244-0191	G5330-244-0191		
MP622	5330-244-0191	G5330-244-0191		
MP623	3010-294-5413	N3010-294-5413		
MP624				
MP625				
MP626				
MP627				
MP628			2Z1409-277	
MP629			2Z8063-29	
MP631			2Z7091-558	
MP632				
MP633			2Z2642.957	
MP636				

TABLE 8-4. STOCK NUMBER IDENTIFICATION — Cont'd.

REF. DESIG.	STOCK NUMBER			
	FEDERAL	NAVY STOCK NUMBER	SIGNAL CORPS	AIR FORCE
MP638				
N601				
N602	5840-644-4281	N5840-644-4281	2Z80760173	
N603			2Z7091-562	
N604			2Z8076-189	
O604	6695-599-5445	N6695-599-5445	2Z7858-227	
O605	5840-311-6498	N5840-311-6498	2Z7858-225	
O606	5965-387-6852	N5965-387-6852	2Z7858-228	
O607			3H305-192	
O608			2Z7780-155	
O609			2Z7858-224	
O610			2Z4872-241	
O611	3020-294-6034	N3020-294-6034	2Z4878-1407	
O612			2Z8320-65	
O615				
O616	5840-305-5843	N5840-305-5843	2Z306-30	
O617	3020-294-9162	N3020-294-9162	2Z4878-1425	
O618	5999-643-8017	N5999-643-8017	2Z8301-39	
O619	5840-392-6166	N5840-392-6166	2Z7858-223	
O620	3010-253-1410	N3010-253-1410	2Z3295-174	
O621	5840-392-6192	N5840-392-6192	2Z8201.77	
O624	5840-308-4993	N5840-308-4993	2Z8201.81	
O625	5840-308-4995	N5840-308-4995	2Z8201.78	
O626	5840-308-4994	N5840-308-4994	2Z8201.80	
O629	5330-244-0191	G5330-244-0191	2Z4868.1108	
O630			2Z7858.243	
O631	5840-311-6500	N5840-311-6500	2Z7858.244	
O632	5330-599-3385	N5330-599-3385	2Z4868.1106	
O633	5330-291-4798	N5330-291-4798	2Z4868.1105	
O634	5330-244-0193	G5330-244-0193	2Z4868.1104	
O636	5330-252-6706	N5330-252-6706	2Z4868.1103	
O637	5330-309-0262	N5330-309-0262	2Z4868.1110	
O638	5935-189-4908	N5935-189-4908	2Z1619-50	
O639	5330-292-0880	G5330-292-0880	2Z4868.111	
O640			2Z4868.1102	
O641			2Z4868.1101	
O644	5935-303-4327	N5935-303-4327	3H5236-2	
O645	5330-244-0191	G5330-244-0191	2Z4868.1100	
O646	5935-196-1428	N5935-196-1428		
O651	4730-289-4898	N4730-289-4898	2Z307-127	
O652			2Z307-128	
O653			2Z380-121	
O654	4730-289-5085	N4730-289-5085	2Z1409-269	
O655	5840-309-9223	N5840-309-9223	2Z3613-12	
O656	5840-378-5014	N5840-378-5014	2Z307-125	
O657	5840-305-6547	N5840-305-6547	2Z380-120	
O658	5330-244-0191	G5330-244-0191	2Z4868.995	
O659	5340-265-9981	N5340-265-9981	2Z7858-293	
O660	4730-289-2506	N4730-289-2506	2Z307-129	
O661	5330-340-2095	N5330-340-2095	6Z8093-8	
O662	3040-310-0208	N3040-310-0208	2Z4048-4	
O663			6L996-14-5	
O666			2Z7858-226	
O671	5940-260-0455	N5940-260-0455	2Z2712.88	
O674			2Z2712.266	
O675	5330-244-0193	G5330-244-0193	2Z4868.1084	
O681			2Z8811-2	
O685	5840-313-1540	N5840-313-1540	2Z8879-363	
O688				
O689	5840-308-4997	N5840-308-4997	2Z8203-635	
O690	5840-308-4996	N5840-308-4996	2Z8203-634	
O691			2Z6820.468	
O692			2Z1409-287	

TABLE 8-4. STOCK NUMBER IDENTIFICATION — Cont'd

REF. DESIG.	STOCK NUMBER			
	FEDERAL	NAVY STOCK NUMBER	SIGNAL CORPS	AIR FORCE
O693			2Z8320-76	
O694			6Z8900A-5	
O695	5330-244-0191	G5330-244-0191	2Z4868.1103	
O696			2Z1409-297	
O697			2Z4878-1525	
O698			2Z3876.164	
O699			2Z4875-473	
O1602			2Z3273-300	
O1608			2Z8203-727	
O1610	3010-294-6781	N3010-294-6781	2Z3273-296	
O1611			2Z7255-59	
O1612				
R601	5905-192-3971	N5905-192-3971	3RC20BF331J	
R602				
R603	5905-284-3467	N5905-284-3467		
R604				
R605				
R606				
R608	5905-249-8130	N5905-249-8130	3Z7325-59	
R609	5905-279-8990	N5905-279-8990	3Z7470-5	
R610	5905-192-2996	N5905-192-2996	3RV21019	
R611	5905-254-9201	N5905-254-9201	3RC20BF473J	
R613	5905-299-1999	N5905-299-1999	3RC30BF154J	
R614	5905-171-2000	N5905-171-2000	3RC20BF684J	
R616	5905-643-9816	N5905-643-9816	3RC30BF472J	
R618	5905-299-2003	N5905-299-2003	3RC30BF104J	
R619	5905-299-1995	N5905-299-1995	3RC30BF334J	
R620	5905-299-2022	N5905-299-2022	3RC30BF223J	
R623	5905-249-3661	N5905-249-3661	3RC20BF683J	
R626	5905-238-3835	N5905-238-3835	3RV62523	
R627	5905-279-3278	N5905-279-3278	3Z5992-86	
R628				
R630				
R633				
R634				
R638	5905-171-1998	N5905-171-1998	3RC20BF333J	
R639	5905-195-6761	N5905-195-6761	3RC20BF104J	
R640	5905-192-0667	N5905-192-0667	3RC20BF224J	
R641	5905-195-9457	N5905-195-9457	3RC20BF332J	
R642	5905-279-1876	N5905-279-1876	3RC20BF222J	
R644	5905-243-6821	N5905-243-6821	3RC20BF153J	
R647	5905-192-0379	N5905-192-0379	3RC20BF334J	
R648	5905-279-2626	N5905-279-2626	3RC30BF331J	
R651	5905-642-0308	N5905-642-0308	NRV22508	
R652	5905-279-3504	N5905-279-3504	3RC20BF472J	
R653	5905-249-4195	N5905-249-4195	3RC20BF103J	
R655	5905-279-2515	N5905-279-2515	3RC20BF474J	
R657	5905-279-1719	N5905-279-1719	3RC30BF103J	
R660	5905-193-2095	N5905-193-2095	3Z7425-113	
R662	5905-253-6703	N5905-253-6703	3Z7425-112	
R663	5905-158-6777	N5905-158-6777	3RW27322	
R670	5905-190-8883	N5905-190-8883	3RC20BF100J	
R671	5905-174-4920	N5905-174-4920	3RV25017	
R675	5905-299-2018	N5905-299-2018	3RC30BF333J	
R680	5905-195-5571	N5905-195-5571	3RC20BF680J	
R682	5905-192-9816	N5905-192-9816	3RV41034	
R684	5905-195-6806	N5905-195-6806	3RC20BF102J	
R685	5905-174-4920	N5905-174-4920	3RV25017	
R697	5905-049-8619	N5905-049-8619	3Z5993-75	
R1601	5905-299-2046	N5905-299-2046	3RC30BF152J	
R1605	5905-192-0390	N5905-192-0390	3RC20BF105J	
R1611	5905-171-2004	N5905-171-2004	3RC20BF223J	
R1618	5905-263-2330	N5905-263-2330	2RV55054	

TABLE 8-4. STOCK NUMBER IDENTIFICATION — Cont'd.

REF. DESIG.	STOCK NUMBER			
	FEDERAL	NAVY STOCK NUMBER	SIGNAL CORPS	AIR FORCE
R1620	5905-279-1757	N5905-279-1757	3RC20BF152J	
R1633	5905-279-3514	N5905-279-3514	3RC20BF181J	
R1636	5905-299-2036	N5905-299-2036	3RC30BF682J	
R1639	5905-195-9493	N5905-195-9493	3RC20BF682J	
R1641	5905-192-3973	N5905-192-3973	3RC20BF471J	
R1657	5905-226-9493	N5905-226-9493	3RV62524	
R1677	5905-279-1883	N5905-279-1883	3RC20BF335J	
R1683	5905-299-2000	N5905-299-2000	3RC30BF224J	
R1689	5905-226-9525	N5905-226-9525	3RV52538	
R1690	5905-195-9483	N5905-195-9483	3RC20BF154J	
R1691	5905-279-1754	N5905-279-1754	3RC20BF155J	
R1693	5905-253-8768	N5905-253-8768	3Z7498-25.103	
R1696	5905-252-6932	N5905-252-6932	3Z7498-50.185	
R2601	5905-642-0794	N5905-642-0794	3RV51040	
R2602	5905-299-2010	N5905-299-2010	3RC30BF683J	
R2603				
R2615				
R2617	5905-195-2474	N5905-195-2474	3RP2922	
R2618	5905-114-3438	N5905-114-3438	3Z7450-179	
R2619	5905-248-6393	N5905-248-6393	3RV35021	
R2620	5905-192-0660	N5905-192-0660	3RC20BF184J	
R2622	5905-195-6791	N5905-195-6791	3RC20BF681J	
R2635				
S601	5930-253-3968	N5930-253-3968	2Z9825.62.653	
S602	5930-050-2704	N5930-050-2704	3Z9863-52K	
S603	5930-501-0390	N5930-501-0390	3Z9815-17	
S604	5930-050-2707	N5930-050-2707		
S606	5930-254-6175	N5930-254-6175	3Z9825-62.654	
S608A & B	5930-050-2711	N5930-050-2711	3Z9863-52T	
S609	5930-636-3541	N5930-636-3541	3Z9825-62.652	
S610	5930-249-4556	N5930-249-4556	3Z9695-17.9	
S611	5930-249-4555	N5930-249-4555	3Z9695-17.10	
S612	5930-224-5559	N5930-224-5559	3Z9558-39.20	
S613	5930-259-9405	N5930-259-9405	3Z9863-52S	
S615	5930-268-0324	N5930-268-0324	3Z9824-102.4	
S616	5930-268-0323	N5930-268-0323	3Z9824-102.3	
T601				
T604	5950-519-9001	N5950-519-9001		
T605	5950-251-1601	N5950-251-1601	2Z9617-271	
TB609				
TB610				
TB611				
TB612				
TB613	5970-198-9307	N5970-198-9307		
TP601	5935-258-9894	N5935-258-9894	2Z3062-271	
TP602	5935-237-3960	N5935-237-3960	2Z3062-255	
V601	5960-166-7667	N5960-166-7667	2J6AH6	
V603				
V604				
V605	5960-262-0152	N5960-262-0152	2J6AU6WA	
V606	5960-193-5145	N5960-193-5145		
V608	5960-262-0161	N5960-262-0161	2J6L6WGB	
V609	5960-189-5458	N5960-189-5458	2J7BP7A	
V610	5960-228-0033	N5960-228-0033	2J6AG7	
V625	5960-170-4582	N5960-170-4582	2J5CP1A	
V626	5960-193-5087	N5960-193-5087		
XDS601	6250-299-5240	N6250-299-5240	2Z5883-150	
XDS611	6210-299-6723	N6210-299-6723	2Z5991-235	
XV601	5935-259-1944	N5935-259-1944	2Z8677.94	
XV603	5935-160-1365	N5935-160-1365	2Z8679.30	
XV608	5935-160-1364	N5935-160-1364	2Z8670.33	
XV609				
XV625	5935-237-6444	N5935-237-6444	2Z8684-14	

TABLE 8-4. STOCK NUMBER IDENTIFICATION — Cont'd

REF. DESIG.	STOCK NUMBER			
	FEDERAL	NAVY STOCK NUMBER	SIGNAL CORPS	AIR FORCE
XV626	5935-222-9938	N5935-222-9938		
Z601	5950-328-9788	N5950-328-9788	3C1081-48F	
Z602	5915-376-8941	N5915-376-8941	3Z1891-87.1	
701-799				
1701-1799				
A701				
A702			2Z1244-267	
A706			2A384-24	
A707	5910-129-6115	N5910-129-6115	2Z1239.154	
A708	5970-198-9306	GF5970-198-9306	2A2665-31	
A709	5970-198-9311	GF5970-198-9311	2A2665-30	
A716			2A2822.14-1	
A717				
A718			2A1382-9	
A720				
A721			2Z1244-228	
A723			2Z1244-273	
A725			2Z7858-310	
A726			3H2549-41	
B701	4450-383-1110	N4450-383-1110	3H388-91	
B701A	6105-351-6864	N6105-351-6864	3H3000-200	
B701B	4450-267-0844	N4450-267-0844	2Z5186-5	
B701C	5820-312-2163	N5820-312-2163	3H2549-38	
B702	6105-643-2220	N6105-643-2220	3H3000A02-62	
B751				
B752		Z17-M061791-1301	3H3000S-174	
B753		Z17-M-61445-9526	3H3000S-39	
B755	6105-635-6018	N6105-635-6018	3H3000A06-9	
C703	5910-101-5616	N5910-101-5616	3K2010121	
C708	5910-112-7426	N5910-112-7426	3DA250-422	
C709	5910-189-5581	N5910-189-5581	3DB15-71	
C711	5910-188-1262	N5910-188-1262	3DB1-276	
C713	5910-184-2696	N5910-184-2696	3K3547221	
C716	5910-194-8753	N5910-194-8753	3DA250-619	
C751	5910-194-8758	N5910-194-8758	3DA250-605	
C753	5910-270-9306	N5910-270-9306	3DB2-281	
CR701				
E701	5940-235-8593	N5940-235-8593		
E705	5960-262-0015	N5960-262-0015	2Z8304.57	
E706	5960-264-3004	N5960-264-3004	2Z8304.275	
E707				
E708				
E709				
E710				
E711				
E713				
E751	5940-239-6567	N5940-239-6567	3Z770-4.84	
E752	5940-109-0932	N5940-109-0932		
E757			3Z12101-8.2	
E759				
E760				
E761	5960-272-9094	N5960-272-9094	2Z8304.276	
H701	5310-699-3344	N5310-699-3344	6L3800-10	
H702				
H705				
H706	5975-378-1591	N5975-378-1591		
H707				
H708			2A478.2-4	
H709			2A1404.8	

TABLE 8-4. STOCK NUMBER IDENTIFICATION — Cont'd.

REF. DESIG.	STOCK NUMBER			
	FEDERAL	NAVY STOCK NUMBER	SIGNAL CORPS	AIR FORCE
H711	5325-249-6338	N5325-249-6338	6Z4856-51	
H712	5845-309-0198	N5845-309-0198	2Z8202.21	
H716	4730-222-1017	N4730-222-1017	6Z3859-25	
H718				
H723			6L4768-13.8S	
H724			6L20926-52.82S	
H725			2A394-7	
H726			6L7916-6-21SS	
H727			6L20928-24.81S	
H728			6L50456	
H729				
H730				
H731				
H732			6L58353-2	
H733	4730-289-1683	G4730-289-1683	2Z2642.530	
H734	4720-230-6504	G4720-230-6504	6Z6017-38	
H736			6L3946-20-2	
H737			2Z6978-23	
H738	5935-252-2742	N5935-252-2742	2Z2642.687	
H739				
H740			6L50244-1	
H741	5325-290-1999	N5325-290-1999	6Z4892-18	
H742	5340-178-1099	N5340-178-1099	2Z2642.209	
H745				
H746	5325-276-6209	N5325-276-6209	6Z4910Q-1	
H747			6L4768-20.8S	
H748	5340-205-6245	N5340-205-6245	2Z2642.313	
H749				
H750				
H751				
H752				
H753	5315-187-9370	G5315-187-9370		
H754				
H756				
H758				
HR701	4540-270-4522	N4540-270-4522	2Z5015-103	
J701	5935-280-2114	N5935-280-2114	2Z3032-39	
J702	5935-259-1164	N5935-259-1164	2Z3039-21	
J751	5935-283-3422	N5935-283-3422	2Z3046.29	
J752	5935-283-1269	N5935-283-1269	2Z5534	
J752A	5935-312-7985	N5935-312-7985	2Z8276-100	
J754	5935-237-3964	N5935-237-3964		
K701	5945-295-6648	N5945-295-6648	2Z7589-199	
K702	5945-295-6645	N5945-295-6645	2Z7586-223	
K703	5945-258-7605	N5945-258-7605	2Z7586-222	
K704	5945-295-6647	N5945-295-6647	2Z7589-200	
K705	5945-257-6653	N5945-257-6653	2Z7587-289	
MP701				
MP702	8040-237-8716	G8040-237-8716		
MP703	9150-233-5575	W9150-233-5575		
MP704				
MP705				
MP706				
MP707	9505-191-1635	G9505-191-1635		
MP708				
MP709				
MP710				
MP711	5330-292-0880	G5330-292-0880		
MP712	5330-244-9276	G5330-244-9276		
MP713	5330-244-9276	G5330-244-9276		
MP714	5330-222-2567	G5330-222-2567		
MP715	5330-270-8469	G5330-270-8469		
MP716				

TABLE 8-4. STOCK NUMBER IDENTIFICATION – Cont'd

REF. DESIG.	STOCK NUMBER			
	FEDERAL	NAVY STOCK NUMBER	SIGNAL CORPS	AIR FORCE
MP717				
MP718				
MP719	3020-529-1471	N3020-529-1471		
MP720	3020-540-2756	N3020-540-2756		
MP721				
MP722	3020-541-5472	N3020-541-5472		
MP723	3020-529-1467	N3020-529-1467		
MP724	5910-666-0085	N5910-666-0085		
MP725	5340-200-4813	N5340-200-4813		
MP726				
MP727				
MP728				
MP730				
MP731	3110-566-8838	N3110-566-8838		
MP732	3110-566-8839	N3110-566-8839		
MP733	3020-534-0503	N3020-534-0503		
MP734	3110-566-8840	N3110-566-8840		
MP735	5330-530-4327	N5330-530-4327		
MP736	5330-197-9595	G5330-197-9595		
MP737	5330-530-4325	N5330-530-4325		
MP738				
MP739				
MP740				
MP741				
MP742	3020-534-0502	N3020-534-0502		
MP743				
MP744				
MP745				
MP746				
MP747	5340-664-0594	N5340-664-0594		
MP748	5340-597-4590	N5340-597-4590		
MP749	5975-378-1591	N5975-378-1591		
MP750	3110-566-8837	N3110-566-8837		
MP751				
MP752				
MP754				
MP755				
MP756				
MP757				
O701	5330-244-9276	G5330-244-9276	2Z4868.1073	
O702			2Z7091-561	
O703			2Z4868.1308	
O723			2Z2712.263	
O724	5330-292-0880	G5330-292-0880	2Z4868.1074	
O725	5330-292-0880	G5330-292-0880		
O729				
O738	5935-173-5901	N5935-173-5901		
O739				
O743	5935-258-4448	N5935-258-4448	2Z1605-25	
O758	5330-286-1195	N5330-286-1195	2Z8086-5	
O778	5935-280-2231	N5935-280-2231	2Z1607-10	
O780	5840-311-7823	N5840-311-7823	2Z8552-101	
O781	5330-244-9277	G5330-244-9277	2Z4868.1078	
O782	5330-244-9277	G5330-244-9277	2Z4868.1077	
O783	5330-244-9277	G5330-244-9277	2Z4868.1081	
O784	5330-197-9594	G5330-197-9594	2Z4866.413	
O785	3110-156-5121	G3110-156-5121	3H305-191	
O786			6Z1933-86	
O787			2Z1619-118	
O792	5935-295-6343	N5935-295-6343	2Z1619-12	
O797			3H4328-2.2	
O798			2Z6188-1	
O1701			2Z8320-69	

TABLE 8-4. STOCK NUMBER IDENTIFICATION — Cont'd.

REF. DESIG.	STOCK NUMBER			
	FEDERAL	NAVY STOCK NUMBER	SIGNAL CORPS	AIR FORCE
O1702	5330-200-6271	N5330-200-6271	2Z4868.1088	
O1703	5935-221-8612	N5935-221-8612	2Z1619-122	
O1704	5315-132-6073	G5315-132-6073	6L996-24.4	
O1705	5330-292-7429	N5330-292-7429	2Z4868.1085	
O1706	5330-194-3733	G5330-194-3733	2Z4868.1275	
O1707	5330-194-3711	G5330-194-3711	2Z4866.385	
O1710	5330-194-3706	G5330-194-3706	2Z4868.1274	
O1711	5330-244-9276	G5330-244-9276	2Z4868.1186	
O1712	5940-248-5239	N5940-248-5239	2Z2712.344	
O1713	3110-156-3485	G3110-156-3485	3H305-203	
O1717	5340-301-0074	N5340-301-0074	3G100-247	
O1718	5340-663-2125	N5340-663-2125	3G100-248	
O1719	4141-512-5587	N4141-512-5587	3H370.3-7	
O1728			3H2565-30	
O1729	5330-244-9276	G5330-244-9276	2Z4866.601	
O1730	5330-244-9277	G5330-244-9277	2Z4866.600	
O1731	5330-244-9277	G5330-244-9277	2Z4866.602	
O1733	5330-244-9276	G5330-244-9276	3H2154-132	
O1734	5335-228-9742	G5335-228-9742	2Z8077A-4	
P701	5935-201-6411	N5935-201-6411	2Z3073-36	
P702	5935-201-2748	N5935-201-2748	2Z3080-25	
P751	5935-283-3850	N5935-283-3850	2Z3082-98	
P757				
R701	5905-279-3241	N5905-279-3241	3Z6568-47	
R703	5905-195-6761	N5905-195-6761	3RC20BF104J	
R705	5905-299-2032	N5905-299-2032	3RC30BF912J	
R707	5905-255-2444	N5905-255-2444	3RV42533	
R710	5905-248-6393	N5905-248-6393	3RV35021	
R711	5905-279-1718	N5905-279-1718	3RC30BF822J	
R713	5905-279-2641	N5905-279-2641		
R715	5905-643-9816	N5905-643-9816	3RC30BF472J	
R716	5905-243-6821	N5905-243-6821	3RC20BF153J	
R718	5905-279-1723	N5905-279-1723	3RC30BF222J	
R719	5905-191-6405	N5905-191-6405	3RW16542	
R721	5905-299-1625	N5905-299-1625	3RV45041	
R723	5905-299-1719	N5905-299-1719	3RC30BF103J	
R724	5905-279-1883	N5905-279-1883	3RC20BF335J	
R725	5905-299-2036	N5905-299-2036	3RC30BF682J	
R726	5905-279-2626	N5905-279-2626	3RC30BF681J	
R727	5905-193-2001	N5905-193-2001	3RW10524	
RF751	5985-387-2794	N5985-387-2794	2Z3295-197	
RF751A				
RF751B				
RF752	5985-296-1710	N5985-296-1710	2Z10008-177	
RF754	5985-387-2795	N5985-387-2795		
S701	5930-548-7901	N5930-548-7901	3Z9812-7.2	
S702	5930-249-4555	N5930-249-4555	3Z9695-17.10	
S703	5930-249-4556	N5930-249-4556	3Z9695-17.9	
S753	5930-201-3418	N5930-201-3418	3Z9825-24.7	
S756	5930-296-5160	N5930-296-5160	3Z9823-18.3	
T701	5950-255-3968	N5950-255-3968	2Z9618-145	
T702	5950-256-5818	N5950-256-5818	2Z9617-270	
T703	5950-645-5626	N5950-645-5626	2Z9900.33	
T704	5950-645-1579	N5950-645-1579	2Z9621-434	
TB701				
TB702				
TP701	5935-258-9894	N5935-258-9894	2Z3062-271	
V701	5960-228-3786	N5960-228-3786	2J5684/C3J/A	
V703	5960-193-5145	N5960-193-5145		
V704				
V706				
W701	6145-125-5274	G6145-125-5274	1B3016-3.8	
XV701	5935-666-3363	N5935-666-3363	2Z8663	

TABLE 8-4. STOCK NUMBER IDENTIFICATION — Cont'd

REF. DESIG.	STOCK NUMBER			
	FEDERAL	NAVY STOCK NUMBER	SIGNAL CORPS	AIR FORCE
XV703	5935-160-1365	N5935-160-1365	2Z8679.30	
XV704	5935-259-1944	N5935-259-1944	2Z8677.94	
801-899				
A801				
A802				
E801				
E802				
E803				
E804				
E805				
E806				
E807				
E808				
E809				
E810				
E811				
E812	6625-539-8300	N6625-539-8300		
E813				
H806				
H807				
H808				
H809				
J801	5935-552-6463	N5935-552-6463		
MP801				
MP802				
MP803				
MP804	5935-295-6343	N5935-295-6343		
MP805	5935-257-7420	N5935-257-7420		
MP806				
MP807				
MP808				
MP809				
MP810	5340-597-4344	N5340-597-4344		
MP811				
MP812				
MP813	5330-245-8181	G5330-245-8181		
MP814				
O801				
O802				
O807				
O850	5330-508-5817	N5330-508-5817	2Z4868.1308	
P850				
RF851			2Z10008-179	
RF852	5985-265-8632	N5985-265-8632	2Z8276-74	
RF852A	5935-296-8871	N5935-296-8871	2Z3194-89	
RF854			2Z1840-1	
RF855	5985-636-4175	N5985-636-4175	2Z10008-95	
RF856	5985-387-2789	N5985-387-2789	2Z10008-180	
W801				
W850				
2401-2499				
J2401	5935-552-6553	N5935-552-6553		
J2405				
MP2401				
MP2402				
MP2403				
MP2404				
MP2405				
MP2406				
T2401				
T2402				
P2401			AN3106A-24-9P	
P2405	5935-201-2713	N5935-201-2713	2Z3083-20	

TABLE 8-4. STOCK NUMBER IDENTIFICATION — Cont'd.

REF. DESIG.	STOCK NUMBER			
	FEDERAL	NAVY STOCK NUMBER	SIGNAL CORPS	AIR FORCE
4301-4399				
C4301	5910-101-4675	N5910-101-4675	3K3556221	
CR4301				
J4301	5935-636-8293	N5935-636-8293	2Z7390-290	
M4301	6625-250-7015	N6625-250-7015	3F871-32	
R4301	5905-171-1998	N5905-171-1998	3RC20BF333J	
R4302	5905-107-5186	N5905-107-5186	3RC20BF151J	
TB4301				
TP4301	5935-259-3151	N5935-259-3151		
TP4302	5935-204-6089	N5935-204-6089		

TABLE 8-5. STOCK NUMBER CROSS REFERENCE

FEDERAL STOCK NUMBER	KEY DESIG.	FEDERAL STOCK NUMBER	KEY DESIG.	FEDERAL STOCK NUMBER	KEY DESIG.
3010-253-1410	O620	5310-209-3498	H628	5330-244-9277	O783
3010-294-5413	MP623	5310-283-0947	MP111	5330-244-9276	O1729
3010-294-6781	O1610	5310-511-5653	O547	5330-244-9277	O1730
3020-294-6034	O611	5310-568-2816	O552	5330-244-9277	O1731
3020-294-9162	O617	5310-699-3344	H701	5330-245-8181	MP813
3020-529-1467	MP723	5315-132-6073	O1704	5330-252-6706	O636
3020-529-1471	MP719	5315-187-9370	H753	5330-270-8469	MP715
3020-534-0502	MP742	5315-276-5906	O553	5330-286-1195	O758
3020-534-0503	MP733	5315-598-8641	O564	5330-290-0918	O132
3020-540-2756	MP720	5325-185-0004	H119	5330-290-0918	O513
3020-541-5472	MP722	5325-202-2520	H141	5330-291-4798	O633
3040-310-0208	O662	5325-249-6338	H625	5330-292-0880	O639
3110-100-6210	O528	5325-276-6209	H547	5330-292-0880	O724
3110-156-3485	O1713	5325-282-6779	H36	5330-292-0880	O725
3110-156-5121	O785	5325-286-5809	H1301	5330-292-0880	O1722
3130-664-6244	O47	5325-286-5809	H621	5330-292-0880	MP711
3432-163-4348	H43	5325-290-1962	MP609	5330-292-7429	O1705
3432-163-4350	H44	5325-290-1999	H741	5330-298-6930	O1311
3432-242-3383	H29	5325-290-3785	H1303	5330-309-0262	O1312
4030-141-7055	O28	5325-290-3785	H548	5330-309-0262	O509
4130-387-6618	O117	5325-291-1745	H125	5330-309-0262	O637
4130-387-6618	O523	5325-291-2366	H113	5330-340-2095	MP106
4140-541-1121	B151	5325-298-5903	H112	5330-340-2095	O301
4141-512-5587	O1719	5325-371-8099	H38	5330-340-2095	O540
4450-267-0844	B701B	5325-639-2612	H508	5330-508-5817	O850
4450-383-1110	B701	5325-639-2612	MP610	5330-530-4325	MP737
4450-203-3548	B601A	5330-050-1218	O515	5330-530-4327	MP735
4450-203-3548	B601	5330-171-3465	O104	5330-599-3385	O632
4450-203-3548	B2350	5330-187-3633	O313	5335-228-9742	O1734
4450-203-3548	B2350A	5330-187-3633	O501	5335-644-1104	O531
4510-270-4522	HR501	5330-194-3706	O1710	5340-178-1038	H137
4540-270-4522	HR701	5330-194-3711	O1707	5340-178-1038	H310
4540-270-4522	HR151	5330-194-3733	O1706	5340-178-1038	MP514
4540-270-4522	HR2351	5330-197-9594	O784	5340-178-1085	H730
4540-270-4522	HR601	5330-197-9595	MP736	5340-178-1085	H542
4720-230-6504	H734	5330-200-6266	O108	5340-178-1085	H635
4730-222-1017	H716	5330-200-6271	O1702	5340-178-1099	H104
4730-289-1683	H733	5330-202-3722	H604	5340-178-1099	H543
4730-289-2506	O660	5330-222-2567	MP714	5340-178-1099	H742
4730-289-4898	O651	5330-244-0191	H678	5340-178-1101	H312
4730-289-5085	O654	5330-244-0191	H679	5340-200-4813	MP725
5120-242-3249	H23	5330-244-0191	O126	5340-205-6245	H748
5120-260-4837	H28	5330-244-0191	O510	5340-205-6245	H139
5305-206-5528	H105	5330-244-0191	O525	5340-205-6245	H311
5305-207-4938	H653	5330-244-0191	MP621	5340-205-6245	H513
5305-208-5923	H108	5330-244-0191	MP622	5340-209-9267	A616
5305-637-4675	H128	5330-244-0191	O629	5340-246-1583	H133
5305-637-4675	H1307	5330-244-0191	O645	5340-246-1583	MP107
5305-637-4675	H505	5330-244-0191	O658	5340-246-9361	H138
5305-637-4815	H103	5330-244-0191	O695	5340-246-9361	H731
5305-637-4815	H308	5330-244-0192	O1309	5340-248-2334	H107
5305-637-4815	H503	5330-244-0192	MP620	5340-248-2334	H3300
5305-637-4815	H632	5330-244-0193	O133	5340-248-2334	H541
5305-637-5312	H610	5330-244-0193	O305	5340-265-9964	O125
5305-637-5314	H504	5330-244-0193	O634	5340-265-9964	O316
5305-641-9414	H644	5330-244-0193	O675	5340-265-9964	O577
5305-698-8507	H502	5330-244-9276	O123	5340-265-9981	O659
5305-698-8507	H307	5330-244-9276	O701	5340-301-0074	O1717
5310-209-1911	H609	5330-244-9276	O1711	5340-301-0074	O570
5310-209-3440	H501	5330-244-9276	O1733	5340-301-0133	E517
5310-209-3440	H315	5330-244-9276	MP712	5340-310-6730	H563
5310-209-3498	H1305	5330-244-9276	MP713	5340-310-6850	H558
5310-209-3498	H525	5330-244-9277	O781	5340-369-7928	A102
5310-209-3498	H134	5330-244-9277	O782	5340-369-7928	A501

TABLE 8-5. STOCK NUMBER CROSS REFERENCE — Cont'd.

FEDERAL STOCK NUMBER	KEY DESIG.	FEDERAL STOCK NUMBER	KEY DESIG.	FEDERAL STOCK NUMBER	KEY DESIG.
5340-597-4344	MP810	5845-252-4403	H544	5905-195-6791	R2622
5340-597-4590	MP748	5845-309-0198	H712	5905-195-6791	R1372
5340-597-6464	A302	5845-309-0198	H123	5905-195-6806	R303
5340-597-6504	A533	5845-309-0198	H301	5905-195-6806	R684
5340-598-0503	H142	5845-309-0198	H627	5905-195-9457	R307
5340-598-0503	H540	5905-049-8619	R697	5905-195-9457	R641
5340-598-0503	H309	5905-100-2016	R156	5905-195-9483	R3325
5340-598-0503	H633	5905-101-7892	R2624	5905-195-9483	R1690
5340-598-4258	H140	5905-107-5186	R129	5905-195-9493	R1639
5340-598-5401	O46	5905-107-5186	R1320	5905-226-9493	R1657
5340-663-2125	O1718	5905-107-8294	R151	5905-226-9525	R1689
5340-663-2125	O571	5905-109-0216	R125	5905-238-3835	R626
5340-664-0594	MP747	5905-109-0216	R1697	5905-243-6821	R644
5340-664-1911	O578	5905-112-4532	R168	5905-243-6821	R716
5340-696-8053	H1310	5905-112-6705	R517	5905-243-6821	R3319
5340-696-8053	H145	5905-112-6715	R521	5905-248-6393	R710
5340-696-8053	H538	5905-114-3438	R2618	5905-248-6393	R2619
5355-284-5546	H533	5905-157-5574	R152	5905-249-3661	R130
5355-284-5550	O598	5905-158-6777	R663	5905-249-3661	R623
5355-284-5551	O597	5905-171-1998	R1351	5905-249-4195	R109
5355-284-5583	E608	5905-171-1998	R638	5905-249-4195	R653
5355-644-1199	MP105	5905-171-1998	R133	5905-249-4195	R325
5355-644-1700	E110	5905-171-1998	R520	5905-249-8130	R608
5355-644-1700	E609	5905-171-2000	R614	5905-252-4018	R301
5355-644-2124	E2356	5905-171-2004	R1611	5905-252-4149	R2350
5355-644-2430	H663	5905-171-2004	R128	5905-252-6932	R1696
5450-291-0412	O34	5905-171-2004	R1324	5905-253-6703	R662
5810-313-1540	O542	5905-174-4920	R685	5905-253-8768	R1693
5820-312-2163	B701C	5905-174-4920	R671	5905-254-9201	R111
5840-093-5413	H535	5905-185-8490	R3364	5905-254-9201	R310
5840-093-5414	H534	5905-190-8883	R304	5905-254-9201	R611
5840-303-4589	Z509	5905-190-8883	R670	5905-255-2444	R707
5840-305-5843	O616	5905-190-8885	R1362	5905-263-2330	R110
5840-305-6547	O657	5905-190-8885	R633	5905-263-2330	R1618
5840-308-4908	Z511	5905-190-8889	R229	5905-264-8773	R515
5840-308-4993	O624	5905-190-8889	R324	5905-264-8784	R507
5840-308-4994	O626	5905-191-6405	R719	5905-271-3504	R1356
5840-308-4995	O625	5905-191-6405	R516	5905-279-1718	R711
5840-308-4996	O690	5905-192-0377	R3324	5905-279-1719	R118
5840-308-4997	O689	5905-192-0379	R647	5905-279-1719	R657
5840-308-5003	O514	5905-192-0379	R1350	5905-279-1723	R718
5840-309-5537	H154	5905-192-0389	R2603	5905-279-1724	R536
5840-309-5537	H671	5905-192-0390	R106	5905-279-1733	R2323
5840-309-7681	H127	5905-192-0390	R1359	5905-279-1754	R107
5840-309-7681	H615	5905-192-0390	R1605	5905-279-1754	R1691
5840-309-8439	A611	5905-192-0660	R2620	5905-279-1757	R120
5840-309-9223	O655	5905-192-0667	R640	5905-279-1757	R1620
5840-311-6498	O605	5905-192-0667	R3365	5905-279-1757	R353
5840-311-6500	O631	5905-192-2996	R610	5905-279-1760	R226
5840-312-0996	E563	5905-192-3971	R601	5905-279-1876	R228
5840-313-1540	O139	5905-192-3973	R2357	5905-279-1876	R305
5840-313-1540	O312	5905-192-3973	R1641	5905-279-1876	R642
5840-313-1540	O685	5905-192-9816	R682	5905-279-1883	R1677
5840-378-5014	O656	5905-193-2001	R727	5905-279-1883	R724
5840-392-6166	O619	5905-193-2095	R660	5905-279-1930	R2615
5840-392-6192	O621	5905-194-8837	R157	5905-279-2515	R655
5840-504-9140	W2350	5905-195-2474	R2617	5905-279-2515	R132
5840-519-4737	Z101	5905-195-5571	R680	5905-279-2515	R3304
5840-519-7609	AN/TPS-1G	5905-195-5571	R1367	5905-279-2617	R508A
5840-644-0847	O588	5905-195-6492	R524	5905-279-2624	R522
5840-644-4281	N602	5905-195-6754	R534	5905-279-2626	R726
5840-665-0045	A517	5905-195-6761	R703	5905-279-2626	R648
5840-665-3272	RF503	5905-195-6761	R312	5905-279-2626	R154
5840-665-3388	H562	5905-195-6761	R639	5905-279-2641	R713

TABLE 8-5. STOCK NUMBER CROSS REFERENCE — Cont'd

FEDERAL STOCK NUMBER	KEY DESIG.	FEDERAL STOCK NUMBER	KEY DESIG.	FEDERAL STOCK NUMBER	KEY DESIG.
5905-279-2643	R153	5910-101-5616	C703	5910-191-9340	C612
5905-279-2652	R523	5910-101-5627	C3318	5910-191-9640	C646
5905-279-3241	R701	5910-101-5652	C622	5910-194-7802	A608
5905-279-3278	R627	5910-101-5789	C621	5910-194-8753	C716
5905-279-3504	R652	5910-101-5818	C625	5910-194-8756	C513
5905-279-3504	R131	5910-112-7093	C662	5910-194-8758	C751
5905-279-3504	R236	5910-112-7117	C523	5910-196-0525	C222
5905-279-3505	R3345	5910-112-7161	C706	5910-196-0525	C301
5905-279-3513	R302	5910-112-7249	C105	5910-196-5149	C525
5905-279-3513	R231	5910-112-7261	C101	5910-197-1392	C661
5905-279-3514	R1633	5910-112-7261	C605	5910-197-1560	C332
5905-279-4981	R510	5910-112-7298	C631	5910-197-1566	C334
5905-279-6432	R518	5910-112-7355	C623	5910-197-8218	C501
5905-279-7960	R514	5910-112-7399	C156	5910-236-2622	A617
5905-279-8297	R509	5910-112-7399	C705	5910-239-7487	E537
5905-279-8952	R167	5910-112-7399	C601	5910-245-0328	C310
5905-279-8990	R609	5910-112-7408	C644	5910-245-0328	C532
5905-283-2618	R526	5910-112-7408	C534	5910-248-5301	O530
5905-283-4033	R169	5910-112-7408	C707	5910-252-1814	C518
5905-284-3467	R603	5910-112-7426	C708	5910-262-8407	C516
5905-296-7512	TY501	5910-112-7432	C522	5910-270-9306	C753
5905-299-1625	R1365	5910-112-7524	C107	5910-280-6637	C3306
5905-299-1625	R721	5910-112-7619	C109	5910-280-6637	C110
5905-299-1719	R723	5910-112-7619	C629	5910-284-5023	C503
5905-299-1993	R501	5910-112-7625	C3305	5910-284-8062	E528
5905-299-1995	R113	5910-112-7625	C606	5910-636-2074	C3315
5905-299-1995	R619	5910-112-7774	C2351	5910-642-6773	C2350
5905-299-1999	R613	5910-112-8187	C104	5910-644-0731	C307
5905-299-1999	R102	5910-112-8187	C1350	5910-644-0731	C527
5905-299-2000	R127	5910-112-8188	C645	5910-644-5863	C509
5905-299-2000	R1683	5910-112-8248	C1353	5910-665-4030	C159
5905-299-2003	R618	5910-112-8248	C240	5910-666-0084	A609
5905-299-2003	R505	5910-112-8272	C302	5910-666-0085	MP724
5905-299-2010	R2602	5910-126-1618	C659	5910-666-6228	C1367
5905-299-2018	R351	5910-126-1619	C305	5910-666-6725	A529
5905-299-2018	R675	5910-129-6115	A707	5910-666-7144	C666
5905-299-2022	R620	5910-129-6260	C602	5910-817-5801	C630
5905-299-2028	R632	5910-160-1156	C102	5910-817-5801	C507
5905-299-2032	R705	5910-160-1158	C1363	5915-155-7628	Z153
5905-299-2036	R725	5910-160-1158	C632	5915-296-0854	Z2351
5905-299-2036	R329	5910-160-1159	C306	5915-311-3317	W2351
5905-299-2036	R1636	5910-160-5324	C610	5915-346-4695	Z161
5905-299-2046	R1601	5910-160-7152	C660	5915-376-8941	Z602
5905-299-2048	R101	5910-171-0165	E602	5915-376-8942	Z501
5905-299-2048	R535	5910-174-9992	C665	5915-376-8945	Z151
5905-299-2053	R162	5910-174-9997	C701	5915-376-8956	Z504
5905-299-2053	R1315	5910-177-7933	E221	5915-665-1939	L604
5905-299-2059	R160	5910-183-9260	C613	5920-177-1700	O1301
5905-518-6723	R1321	5910-184-0151	C616	5920-248-5386	O103
5905-642-0308	R651	5910-184-1537	C3316	5920-248-5386	O504
5905-642-0794	R2601	5910-184-2696	C713	5920-296-7738	O503
5905-643-9816	R616	5910-184-5747	C654	5930-050-2680	S101
5905-643-9816	R112	5910-184-5995	C1358	5930-050-2704	S602
5905-643-9816	R715	5910-184-5995	C535	5930-050-2707	S152
5905-643-9816	R314	5910-188-1262	C711	5930-050-2707	S604
5910-101-3990	C3314	5910-188-1387	C153	5930-050-2711	S608A
5910-101-3990	C1365	5910-189-5544	C158	5930-201-3418	S753
5910-101-4013	C617	5910-189-5544	C512	5930-201-4708	A619
5910-101-4016	C603	5910-189-5581	C709	5930-224-5559	S612
5910-101-4758	C504	5910-190-8032	C628	5930-239-3634	S502
5910-101-4821	C333	5910-190-9591	C648	5930-247-8277	S506
5910-101-4890	C111	5910-190-9665	C615	5930-249-4555	S2351
5910-101-4890	C339	5910-191-3072	C510	5930-249-4555	S611
5910-101-4890	C230	5910-191-3072	C4301	5930-249-4555	S155

TABLE 8-5. STOCK NUMBER CROSS REFERENCE — Cont'd.

FEDERAL STOCK NUMBER	KEY DESIG.	FEDERAL STOCK NUMBER	KEY DESIG.	FEDERAL STOCK NUMBER	KEY DESIG.
5930-249-4555	S505	5935-222-9938	XV626	5935-636-8293	J153
5930-249-4555	S702	5935-224-8150	H35	5935-636-8293	J224
5930-249-4556	S703	5935-228-9139	E2378	5935-636-8293	J350
5930-249-4556	S154	5935-229-5673	XV155	5935-643-6610	H15
5930-249-4556	S2352	5935-237-3960	TP152	5935-643-6897	J310
5930-249-4556	S610	5935-237-3960	TP602	5935-643-9875	E35
5930-253-3968	S601	5935-237-3960	TP501	5935-665-4841	E520
5930-254-6175	S606	5935-237-3964	J754	5935-665-4845	E529
5930-257-0007	S501	5935-237-3964	J603	5935-666-3363	XV701
5930-259-9405	S613	5935-237-6444	XV625	5940-109-0932	E752
5930-268-0323	S616	5935-241-4068	J155	5940-151-4031	O135
5930-268-0324	S615	5935-241-4068	J505	5940-171-0198	E101
5930-296-5160	S756	5935-244-9919	P310	5940-177-9887	E2351
5930-296-5981	S151	5935-249-3312	E2374	5940-235-8503	E553
5930-296-9164	S2353	5935-249-3319	E2371	5940-235-8593	E701
5930-501-0390	S2355	5935-249-3319	E534	5940-239-6567	E751
5930-501-0390	S603	5935-252-2742	H738	5940-239-6573	E151
5930-501-3798	A618	5935-253-2430	O131	5940-239-6573	E503
5930-501-3799	A615	5935-253-2430	O306	5940-239-7487	E129
5930-548-3487	S2354	5935-253-2430	O508	5940-239-7487	E612
5930-548-7901	S504	5935-257-7420	MP805	5940-243-7719	E152
5930-548-7901	S153	5935-257-9739	J601	5940-243-9293	E249
5930-548-7901	S701	5935-258-1763	E34	5940-248-5239	O1712
5930-636-3541	S609	5935-258-1763	E558	5940-258-5185	E556
5935-049-8426	H672	5935-258-1767	MP108	5940-258-5647	E502
5935-049-8426	H155	5935-258-4448	O743	5940-260-0455	O3301
5935-149-2733	J228	5935-258-7751	E2364	5940-260-0455	O671
5935-149-3483	J152	5935-258-9894	TP101	5940-272-5786	E601
5935-149-3483	J302	5935-258-9894	TP502	5940-283-3752	O136
5935-149-3483	J503	5935-258-9894	TP601	5940-294-4359	O115
5935-149-3983	P302	5935-258-9894	TP701	5940-549-2785	E119
5935-149-3983	P503	5935-259-1164	J702	5940-645-1437	L504
5935-149-4066	P307	5935-259-1944	XV704	5945-204-6555	K151
5935-149-4066	P224	5935-259-1944	XV301	5945-257-6653	K705
5935-149-4155	J501	5935-259-1944	XV601	5945-258-7605	K703
5935-160-1364	XTY501	5935-259-1944	XV106	5945-258-9313	K501
5935-160-1364	XV608	5935-259-1944	XV224	5945-259-9884	K3300
5935-160-1365	XV703	5935-259-2563	O302	5945-295-6645	K702
5935-160-1365	XV105	5935-259-3151	TP4301	5945-295-6647	K704
5935-160-1365	XV1353	5935-279-3653	P757	5945-295-6648	K701
5935-160-1365	XV603	5935-280-2114	J701	5945-295-6992	K152
5935-173-5895	P511	5935-280-2231	O778	5950-194-9002	T153
5935-173-5895	P308	5935-280-2354	H16	5950-219-6512	L351
5935-173-5901	O738	5935-280-2354	H13	5950-219-6578	L1356
5935-189-4908	O739	5935-280-2833	P228	5950-250-7528	T102
5935-189-4908	O638	5935-280-2928	J307	5950-251-1582	T2350
5935-201-3216	P3	5935-280-2928	J517	5950-251-1597	T101
5935-201-3715	E2368	5935-283-1269	J752	5950-251-1601	T605
5935-201-4162	J508	5935-283-1269	J602	5950-254-9756	L603
5935-201-4783	XV3308	5935-283-3418	J151	5950-255-2938	L358
5935-201-4783	XV505A	5935-283-3422	J751	5950-255-3512	T103
5935-201-4783	XV101	5935-283-3850	P751	5950-255-3968	T701
5935-201-5983	TP301	5935-295-4789	J511	5950-256-5818	T702
5935-201-6411	P701	5935-295-6343	MP804	5950-256-7354	L1362
5935-201-7181	E2365	5935-295-6343	O792	5950-257-1624	T504
5935-201-8089	P516A	5935-295-6343	O516	5950-257-3806	L1301
5935-201-8529	XV222	5935-296-8871	RF852A	5950-263-1708	L1358
5935-204-6089	TP4302	5935-303-4327	O644	5950-263-1709	L1309
5935-204-6168	E526	5935-312-7985	J752A	5950-265-0177	L1304
5935-204-6171	E524	5935-333-3831	O551	5950-265-0658	L1352
5935-204-8392	E36	5935-351-9777	XV505	5950-265-0941	L1303
5935-221-5668	XV151	5935-552-6463	J801	5950-265-0942	L1363
5935-221-8612	O1703	5935-552-6553	J2401	5950-265-0970	L2311
5935-222-9871	XV501	5935-568-0851	P505	5950-266-0627	L1302

TABLE 8-5. STOCK NUMBER CROSS REFERENCE — Cont'd

FEDERAL STOCK NUMBER	KEY DESIG.	NAVY STOCK NUMBER	KEY DESIG.	NAVY STOCK NUMBER	KEY DESIG.
5950-266-9045	L355	5960-228-3786	V701	5970-198-9312	E535
5950-268-8822	L1355	5960-237-6917	V3306	5970-198-9312	E2355
5950-309-5351	L306	5960-246-4581	H2351	5970-198-9312	E611
5950-328-9788	Z601	5960-246-4581	H626	5970-222-6371	E509
5950-346-9181	T222	5960-246-4581	H111	5970-222-6371	MP509
5950-368-3597	L508	5960-247-8748	V222	5970-222-6374	E108
5950-372-2409	L230	5960-248-3060	V706	5970-222-6374	E318
5950-372-2429	L224	5960-248-3089	V1305	5970-222-6374	E627
5950-376-9723	T301	5960-249-4944	H120	5970-280-4838	E106
5950-387-0460	L307	5960-249-4947	H624	5970-284-7218	O556
5950-387-1456	L301	5960-262-0015	E311	5970-284-8096	O562
5950-387-1929	L602	5960-262-0015	E154	5970-285-0067	E554
5950-392-6733	L510	5960-262-0015	E625	5970-295-7655	MP202
5950-392-6734	L505	5960-262-0015	E705	5970-296-4701	E643
5950-506-5796	T601	5960-262-0015	E223	5970-296-4701	E112
5950-519-4739	T155	5960-262-0152	V1350	5970-296-5441	E104
5950-519-4763	L222	5960-262-0152	V605	5970-310-7051	E522
5950-519-8998	L221	5960-262-0152	V704	5970-311-1438	E559
5950-519-9001	T604	5960-262-0167	V3305	5970-313-8205	H568
5950-539-6781	T223	5960-262-0185	V1306	5970-644-2896	E113
5950-552-1124	T105	5960-262-0185	V106	5975-160-4920	H313
5950-645-0952	T503	5960-262-0185	V604	5975-281-0328	E17
5950-645-1579	T704	5960-262-0210	V105	5975-281-0393	E16
5950-645-3249	L303	5960-262-0210	V1353	5975-284-6100	E18
5950-645-3295	L501	5960-262-0345	E256	5975-309-0641	E555
5950-645-3301	L502	5960-262-1357	V301	5975-378-1591	H706
5950-645-4079	L302	5960-262-1357	V224	5975-378-1591	MP749
5950-645-4079	L507	5960-262-3763	V3300	5975-636-4408	E320
5950-645-4090	L506	5960-263-9910	V503	5975-636-4408	E562
5950-645-4806	L308	5960-264-3002	V1355	5985-240-0666	Z2350
5950-645-5626	T703	5960-264-3004	E314	5985-265-8632	RF852
5950-645-6963	T502	5960-264-3004	E155	5985-296-1710	RF752
5950-647-5248	T501	5960-364-3004	E706	5985-387-2716	O555
5950-647-6655	L151	5960-264-3004	E626	5985-387-2725	E523
5950-647-6763	T151	5960-272-9094	E761	5985-387-2789	RF856
5950-647-9217	L228	5960-272-9094	E312	5985-387-2794	RF751
5950-648-0228	T1301	5960-272-9094	E642	5985-387-2795	RF754
5950-648-1132	L304	5960-296-5948	RF501	5985-636-4175	RF855
5950-648-1178	T152	5960-501-0802	E315	5985-642-8749	RF503A
5950-648-2535	L601	5960-548-9851	V156	5985-696-7988	RF502
5955-372-3414	E527	5960-669-8808	E313	5995-173-6132	E506
5960-107-8133	V502	5965-387-6852	O606	5995-283-2574	O579
5960-116-9926	V505	5965-387-6869	H607	5999-643-8012	E501
5960-116-9960	V151	5970-117-5146	E109	5999-643-8017	O618
5960-151-7568	H546	5970-117-5197	E641	6105-238-2962	B502
5960-151-7568	H109	5970-117-5197	E565	6105-351-6864	B701A
5960-166-7663	V603	5970-151-7970	E120	6105-635-6018	B755
5960-166-7667	V601	5970-151-8012	E621	6105-635-6969	B503A
5960-166-7865	V155	5970-151-8012	E550	6105-643-2220	B702
5960-170-4582	V625	5970-171-8012	E105	6105-643-2220	B2350B
5960-188-1541	E538	5970-181-8028	E107	6105-643-2220	B601B
5960-188-3577	V101	5970-184-2003	H42	6130-295-2289	CR501
5960-188-8612	V501	5970-198-9306	A107	6130-635-8083	CR701
5960-189-5458	V609	5970-198-9306	E508	6135-120-1020	BT1
5960-193-5087	V626	5970-198-9306	A708	6145-125-5274	W701
5960-193-5145	V703	5970-198-9307	TB613	6145-161-0880	W31
5960-193-5145	V606	5970-198-9308	O116	6145-161-0909	W2356
5960-194-9408	CR301	5970-198-9308	E622	6145-161-0911	W2355
5960-224-4868	CR502	5970-198-9311	A106	6145-161-0913	W2354
5960-224-4871	CR1350	5970-198-9311	A709	6145-170-8737	W29
5960-224-4871	CR601	5970-198-9312	E114	6145-170-8737	W17
5960-228-0033	V610	5970-198-9312	E116	6145-184-1110	W45
5960-228-0033	V103	5970-198-9312	E117	6145-184-6116	W37
5960-228-0033	V3308	5970-198-9312	E533	6145-186-1460	W30

TABLE 8-5. STOCK NUMBER CROSS REFERENCE – Cont'd.

FEDERAL STOCK NUMBER	KEY DESIG.
6145-192-7167	W32
6145-192-7217	W34
6145-192-7219	W33
6145-283-9476	W28
6145-635-2786	W36
6145-635-2786	W35
6210-250-5472	I612
6210-299-6112	I611
6210-299-6723	XDS611
6230-264-8261	O43
6240-155-8706	I601
6240-179-1813	I151
6240-179-1813	I501
6240-223-9100	I610
6250-299-5240	XDS601
6250-508-5842	XI501
6250-508-5842	XII51
6625-250-7015	M601
6625-250-7015	M2350
6625-250-7015	M501
6625-260-1440	E13
6625-260-1441	E14
6625-260-1442	E15
6625-265-9692	H606
6625-539-8300	E812
6625-635-4242	M502
6625-644-3176	O129
6695-599-5445	O604
8040-237-8716	MP702
8040-273-8716	MP303
8040-273-8716	MP301
9150-233-5575	MP703
9330-281-2998	H662
9330-281-9876	MP602
9505-191-1635	MP707

NAVY STOCK NUMBER	KEY DESIG.
N3010-253-1410	O620
N3010-294-5413	MP623
N3010-294-6781	O1610
N3020-294-6034	O611
N3020-294-9162	O617
N3020-529-1467	MP723
N3020-529-1471	MP719
N3020-534-0502	MP742
N3020-534-0503	MP733
N3020-540-2756	MP720
N3020-541-5472	MP722
N3040-310-0208	O662
N3110-100-6210	O528
G3110-156-3485	O1713
G3110-156-5121	O785
N3130-664-6244	O47
G3432-163-4348	H43
G3432-163-4350	H44
G3432-242-3383	H29
N4030-141-7055	O28
N4130-387-6618	O117
N4130-387-6618	O523
N4140-541-1121	B151
N4141-512-5587	O1719
N4450-267-0844	B701B
N4450-383-1110	B701
N4450-203-3548	B601A
N4450-203-3548	B601
N4450-203-3548	B2350
N4450-203-3548	B2350A
N4510-270-4522	HR501
N4540-270-4522	HR701
N4540-270-4522	HR151
N4540-270-4522	HR2351
N4540-270-4522	HR601
G4720-230-6504	H734
N4730-222-1017	H716
G4730-289-1683	H733
N4730-289-2506	O660
N4730-289-4898	O651
N4730-289-5085	O654
G5120-242-3249	H23
G5120-260-4837	H28
N5305-206-5528	H105
N5305-207-4938	H653
N5305-208-5923	H108
N5305-637-4675	H128
N5305-637-4675	H1307
N5305-637-4675	H505
N5305-637-4815	H103
N5305-637-4815	H308
N5305-637-4815	H503
N5305-637-4815	H632
N5305-637-5312	H610
N5305-637-5314	H504
N5305-641-9414	H644
N5305-698-8507	H502
N5305-698-8507	H307
N5310-209-1911	H609
N5310-209-3440	H501
N5310-209-3440	H315
N5310-209-3498	H1305
N5310-209-3498	H525
N5310-209-3498	H134
N5310-209-3498	H628
N5310-283-0947	MP111
N5310-511-5653	O547
N5310-568-2816	O552
N5310-699-3344	H701
G5315-132-6073	O1704
G5315-187-9370	H753
N5315-276-5906	O553
N5315-598-8641	O564
N5325-185-0004	H119
N5325-202-2520	H141
N5325-249-6338	H625
N5325-276-6209	H547
G5325-282-6779	H36
N5325-286-5809	H1301
N5325-286-5809	H621
N5325-290-1962	MP609
N5325-290-1999	H741
N5325-290-3785	H1303
N5325-290-3785	H548
N5325-291-1745	H125
N5325-291-2366	H113
N5325-298-5903	H112
G5325-371-8099	H38
N5325-639-2612	H508
N5325-639-2612	MP610
G5330-050-1218	O515
N5330-171-3465	O104
G5330-187-3633	O313
G5330-187-3633	O501
G5330-194-3706	O1710
G5330-194-3711	O1707
G5330-194-3733	O1706
G5330-197-9594	O784
G5330-197-9595	MP736
N5330-200-6266	O108
N5330-200-6271	O1702
N5330-202-3722	H604
G5330-222-2567	MP714
G5330-244-0191	H678
G5330-244-0191	H679
G5330-244-0191	O126
G5330-244-0191	O510
G5330-244-0191	O525
G5330-244-0191	MP621
G5330-244-0191	MP622
G5330-244-0191	O629
G5330-244-0191	O645
G5330-244-0191	O658
G5330-244-0191	O695
G5330-244-0192	O1309
G5330-244-0192	MP620
G5330-244-0193	O133
G5330-244-0193	O305
G5330-244-0193	O634
G5330-244-0193	O675
G5330-244-9276	O123
G5330-244-9276	O701
G5330-244-9276	O1711
G5330-244-9276	O1733
G5330-244-9276	MP712
G5330-244-9276	MP713
G5330-244-9277	O781
G5330-244-9277	O782
G5330-244-9277	O783
G5330-244-9276	O1729
G5330-244-9277	O1730
G5330-244-9277	O1731
G5330-245-8181	MP813
N5330-252-6706	O636
G5330-270-8469	MP715
N5330-286-1195	O758
N5330-290-0918	O132
N5330-290-0918	O513
N5330-291-4798	O633
G5330-292-0880	O639
G5330-292-0880	O724
G5330-292-0880	O725
G5330-292-0880	O1722
G5330-292-0880	MP711
N5330-292-7429	O1705
N5330-298-6930	O1311
N5330-309-0262	O1312
N5330-309-0262	O509
N5330-309-0262	O637
N5330-340-2095	MP106
N5330-340-2095	O301
N5330-340-2095	O540
N5330-508-5817	O850
N5330-530-4325	MP737

TABLE 8-5. STOCK NUMBER CROSS REFERENCE — Cont'd

NAVY STOCK NUMBER	KEY DESIG.	NAVY STOCK NUMBER	KEY DESIG.	NAVY STOCK NUMBER	KEY DESIG.
N5330-530-4327	MP735	N5450-291-0412	O34	N5905-171-2004	R1324
N5330-599-3385	O632	N5810-313-1540	O542	N5905-174-4920	R685
G5335-228-9742	O1734	N5820-312-2163	B701C	N5905-174-4920	R671
N5335-644-1104	O531	N5840-093-5413	H535	N5905-185-8490	R3364
N5340-178-1038	H137	N5840-093-5414	H534	N5905-190-8883	R304
N5340-178-1038	H310	N5840-303-4589	Z509	N5905-190-8883	R670
N5340-178-1038	MP514	N5840-305-5843	O616	N5905-190-8885	R1362
N5340-178-1085	H730	N5840-305-6547	O657	N5905-190-8885	R633
N5340-178-1085	H542	N5840-308-4908	Z511	N5905-190-8889	R229
N5340-178-1085	H635	N5840-308-4993	O624	N5905-190-8889	R324
N5340-178-1099	H104	N5840-308-4994	O626	N5905-191-6405	R719
N5340-178-1099	H543	N5840-308-4995	O625	N5905-191-6405	R516
N5340-178-1099	H742	N5840-308-4996	O690	N5905-192-0377	R3324
N5340-178-1101	H312	N5840-308-4997	O689	N5905-192-0379	R647
N5340-200-4813	MP725	N5840-308-5003	O514	N5905-192-0379	R1350
N5340-205-6245	H748	N5840-309-5537	H154	N5905-192-0389	R2603
N5340-205-6245	H139	N5840-309-5537	H671	N5905-192-0390	R106
N5340-205-6245	H311	N5840-309-7681	H127	N5905-192-0390	R1359
N5340-205-6245	H513	N5840-309-7681	H615	N5905-192-0390	R1605
N5340-209-9267	A616	N5840-309-8439	A611	N5905-192-0660	R2620
N5340-246-1583	H133	N5840-309-9223	O655	N5905-192-0667	R640
N5340-246-1583	MP107	N5840-311-6498	O605	N5905-192-0667	R3365
N5340-246-9361	H138	N5840-311-6500	O631	N5905-192-2996	R610
N5340-246-9361	H731	N5840-312-0996	E563	N5905-192-3971	R601
N5340-248-2334	H107	N5840-313-1540	O139	N5905-192-3973	R2357
N5340-248-2334	H3300	N5840-313-1540	O312	N5905-192-3973	R1641
N5340-248-2334	H541	N5840-313-1540	O685	N5905-192-9816	R682
N5340-265-9964	O125	N5840-378-5014	O656	N5905-193-2001	R727
N5340-265-9964	O316	N5840-392-6166	O619	N5905-193-2095	R660
N5340-265-9964	O577	N5840-392-6192	O621	N5905-194-8837	R157
N5340-265-9981	O659	N5840-504-9140	W2350	N5905-195-2474	R2617
N5340-301-0074	O1717	N5840-519-4737	Z101	N5905-195-5571	R680
N5340-301-0074	O570	F5840-519-7609	AN/TPS-1G	N5905-195-5571	R1367
N5340-301-0133	E517	N5840-644-0847	O588	N5905-195-6492	R524
N5340-310-6730	H563	N5840-644-4281	N602	N5905-195-6754	R534
N5340-310-6850	H558	N5840-665-0045	A517	N5905-195-6761	R703
N5340-369-7928	A102	F5840-665-3272	RF503	N5905-195-6761	R312
N5340-369-7928	A501	N5840-665-3388	H562	N5905-195-6761	R639
N5340-597-4344	MP810	N5845-252-4403	H544	N5905-195-6791	R2622
N5340-597-4590	MP748	N5845-309-0198	H712	N5905-195-6791	R1372
N5340-597-6464	A302	N5845-309-0198	H123	N5905-195-6806	R303
N5340-597-6504	A533	N5845-309-0198	H301	N5905-195-6806	R684
N5340-598-0503	H142	N5845-309-0198	H627	N5905-195-9457	R307
N5340-598-0503	H540	N5905-049-8619	R697	N5905-195-9457	R641
N5340-598-0503	H309	N5905-100-2016	R156	N5905-195-9483	R3325
N5340-598-0503	H633	N5905-101-7892	R2624	N5905-195-9483	R1690
N5340-598-4258	H140	N5905-107-5186	R129	N5905-195-9493	R1639
N5340-598-5401	O46	N5905-107-5186	R1320	N5905-226-9493	R1657
N5340-663-2125	O1718	N5905-107-8294	R151	N5905-226-9525	R1689
N5340-663-2125	O571	N5905-109-0216	R125	N5905-238-3835	R626
N5340-664-0594	MP747	N5905-109-0216	R1697	N5905-243-6821	R644
N5340-664-1911	O578	N5905-112-4532	R168	N5905-243-6821	R716
N5340-696-8053	H1310	N5905-112-6705	R517	N5905-243-6821	R3319
N5340-696-8053	H145	N5905-112-6715	R521	N5905-248-6393	R710
N5340-696-8053	H538	N5905-114-3438	R2618	N5905-248-6393	R2619
N5355-284-5546	H533	N5905-157-5574	R152	N5905-249-3661	R130
N5355-284-5550	O598	N5905-158-6777	R663	N5905-249-3661	R623
N5355-284-5551	O597	N5905-171-1998	R1351	N5905-249-4195	R109
N5355-284-5583	E608	N5905-171-1998	R638	N5905-249-4195	R653
N5355-644-1199	MP105	N5905-171-1998	R133	N5905-249-4195	R325
N5355-644-1700	E110	N5905-171-1998	R520	N5905-249-8130	R608
N5355-644-1700	E609	N5905-171-2000	R614	N5905-252-4018	R301
N5355-644-2124	E2356	N5905-171-2004	R1611	N5905-252-4149	R2350
N5355-644-2430	H663	N5905-171-2004	R128	N5905-252-6932	R1696

TABLE 8-5. STOCK NUMBER CROSS REFERENCE — Cont'd.

NAVY STOCK NUMBER	KEY DESIG.	NAVY STOCK NUMBER	KEY DESIG.	NAVY STOCK NUMBER	KEY DESIG.
N5905-253-6703	R662	N5905-299-1995	R619	N5910-112-7774	C2351
N5905-253-8768	R1693	N5905-299-1999	R613	N5910-112-8187	C104
N5905-254-9201	R111	N5905-299-1999	R102	N5910-112-8187	C1350
N5905-254-9201	R310	N5905-299-2000	R127	N5910-112-8188	C645
N5905-254-9201	R611	N5905-299-2000	R1683	N5910-112-8248	C1353
N5905-255-2444	R707	N5905-299-2003	R618	N5910-112-8248	C240
N5905-263-2330	R110	N5905-299-2003	R505	N5910-112-8272	C302
N5905-263-2330	R1618	N5905-299-2010	R2602	N5910-126-1618	C659
N5905-264-8773	R515	N5905-299-2018	R351	N5910-126-1619	C305
N5905-264-8784	R507	N5905-299-2018	R675	N5910-129-6115	A707
N5905-271-3504	R1356	N5905-299-2022	R620	N5910-129-6260	C602
N5905-279-1718	R711	N5905-299-2028	R632	N5910-160-1156	C102
N5905-279-1719	R118	N5905-299-2032	R705	N5910-160-1158	C1363
N5905-279-1719	R657	N5905-299-2036	R725	N5910-160-1158	C632
N5905-279-1723	R718	N5905-299-2036	R329	N5910-160-1159	C306
N5905-279-1724	R536	N5905-299-2036	R1636	N5910-160-5324	C610
N5905-279-1733	R2323	N5905-299-2046	R1601	N5910-160-7152	C660
N5905-279-1754	R107	N5905-299-2048	R101	N5910-171-0165	E602
N5905-279-1754	R1691	N5905-299-2048	R535	N5910-174-9992	C665
N5905-279-1757	R120	N5905-299-2053	R162	N5910-174-9997	C701
N5905-279-1757	R1620	N5905-299-2053	R1315	N5910-177-7933	E221
N5905-279-1757	R353	N5905-299-2059	R160	N5910-183-9260	C613
N5905-279-1760	R226	N5905-518-6723	R1321	N5910-184-0151	C616
N5905-279-1876	R228	N5905-642-0308	R651	N5910-184-1537	C3316
N5905-279-1876	R305	N5905-642-0794	R2601	N5910-184-2696	C713
N5905-279-1876	R642	N5905-643-9816	R616	N5910-184-5747	C654
N5905-279-1883	R1677	N5905-643-9816	R112	N5910-184-5995	C1358
N5905-279-1883	R724	N5905-643-9816	R715	N5910-184-5995	C535
N5905-279-1930	R2615	N5905-643-9816	R314	N5910-188-1262	C711
N5905-279-2515	R655	N5910-101-3990	C3314	N5910-188-1387	C153
N5905-279-2515	R132	N5910-101-3990	C1365	N5910-189-5544	C158
N5905-279-2515	R3304	N5910-101-4013	C617	N5910-189-5544	C512
N5905-279-2617	R508A	N5910-101-4016	C603	N5910-189-5581	C709
N5905-279-2624	R522	N5910-101-4758	C504	N5910-190-8032	C628
N5905-279-2626	R726	N5910-101-4821	C333	N5910-190-9591	C648
N5905-279-2626	R648	N5910-101-4890	C111	N5910-190-9665	C615
N5905-279-2626	R154	N5910-101-4890	C339	N5910-191-3072	C510
N5905-279-2641	R713	N5910-101-4890	C230	N5910-191-3072	C4301
N5905-279-2643	R153	N5910-101-5616	C703	N5910-191-9340	C612
N5905-279-2652	R523	N5910-101-5627	C3318	N5910-191-9640	C646
N5905-279-3241	R701	N5910-101-5652	C622	N5910-194-7802	A608
N5905-279-3278	R627	N5910-101-5789	C621	N5910-194-8753	C716
N5905-279-3504	R652	N5910-101-5818	C625	N5910-194-8756	C513
N5905-279-3504	R131	N5910-112-7093	C662	N5910-194-8758	C751
N5905-279-3504	R236	N5910-112-7117	C523	N5910-196-0525	C222
N5905-279-3505	R3345	N5910-112-7161	C706	N5910-196-0525	C301
N5905-279-3513	R302	N5910-112-7249	C105	N5910-196-5149	C525
N5905-279-3513	R231	N5910-112-7261	C101	N5910-197-1392	C661
N5905-279-3514	R1633	N5910-112-7261	C605	N5910-197-1560	C332
N5905-279-4981	R510	N5910-112-7298	C631	N5910-197-1566	C334
N5905-279-6432	R518	N5910-112-7355	C623	N5910-197-8218	C501
N5905-279-7960	R514	N5910-112-7399	C156	N5910-236-2622	A617
N5905-279-8297	R509	N5910-112-7399	C705	N5910-239-7487	E537
N5905-279-8952	R167	N5910-112-7399	C601	N5910-245-0328	C310
N5905-279-8990	R609	N5910-112-7408	C644	N5910-245-0328	C532
N5905-283-2618	R526	N5910-112-7408	C534	N5910-248-5301	O530
N5905-283-4033	R169	N5910-112-7408	C707	N5910-252-1814	C518
N5905-284-3467	R603	N5910-112-7426	C708	N5910-262-8407	C516
N5905-296-7512	TY501	N5910-112-7432	C522	N5910-270-9306	C753
N5905-299-1625	R1365	N5910-112-7524	C107	N5910-280-6637	C3306
N5905-299-1625	R721	N5910-112-7619	C109	N5910-280-6637	C110
N5905-299-1719	R723	N5910-112-7619	C629	N5910-284-5023	C503
N5905-299-1993	R501	N5910-112-7625	C3305	N5910-284-8062	E528
N5905-299-1995	R113	N5910-112-7625	C606	N5910-636-2074	C3315

TABLE 8-5. STOCK NUMBER CROSS REFERENCE — Cont'd

NAVY STOCK NUMBER	KEY DESIG.	NAVY STOCK NUMBER	KEY DESIG.	NAVY STOCK NUMBER	KEY DESIG.
N5910-642-6773	C2350	N5935-149-2733	J228	N5935-258-7751	E2364
N5910-644-0731	C307	N5935-149-3483	J152	N5935-258-9894	TP101
N5910-644-0731	C527	N5935-149-3483	J302	N5935-258-9894	TP502
N5910-644-5863	C509	N5935-149-3483	J503	N5935-258-9894	TP601
N5910-665-4030	C159	N5935-149-3983	P302	N5935-258-9894	TP701
N5910-666-0084	A609	N5935-149-3983	P503	N5935-259-1164	J702
N5910-666-0085	MP724	N5935-149-4066	P307	N5935-259-1944	XV704
N5910-666-6228	C1367	N5935-149-4066	P224	N5935-259-1944	XV301
N5910-666-6725	A529	N5935-149-4155	J501	N5935-259-1944	XV601
N5910-666-7144	C666	N5935-160-1364	XTY501	N5935-259-1944	XV106
N5910-817-5801	C630	N5935-160-1364	XV608	N5935-259-1944	XV224
N5910-817-5801	C507	N5935-160-1365	XV703	N5935-259-2563	O302
N5915-155-7628	Z153	N5935-160-1365	XV105	N5935-259-3151	TP4301
N5915-296-0854	Z2351	N5935-160-1365	XV1353	N5935-279-3653	P757
N5915-311-3317	W2351	N5935-160-1365	XV603	N5935-280-2114	J701
N5915-346-4695	Z161	N5935-173-5895	P511	N5935-280-2231	O778
N5915-376-8941	Z602	N5935-173-5895	P308	N5935-280-2354	H16
N5915-376-8942	Z501	N5935-173-5901	O738	N5935-280-2354	H13
N5915-376-8945	Z151	N5935-189-4908	O739	N5935-280-2833	P228
N5915-376-8956	Z504	N5935-189-4908	O638	N5935-280-2928	J307
N5915-665-1939	L604	N5935-201-3216	P3	N5935-280-2928	J517
N5920-177-1700	O1301	N5935-201-3715	E2368	N5935-283-1269	J752
N5920-248-5386	O103	N5935-201-4162	J508	N5935-283-1269	J602
N5920-248-5386	O504	N5935-201-4783	XV3308	N5935-283-3418	J151
N5920-296-7738	O503	N5935-201-4783	XV505A	N5935-283-3422	J751
N5930-050-2680	S101	N5935-201-4783	XV101	N5935-283-3850	P751
N5930-050-2704	S602	N5935-201-5983	TP301	N5935-295-4789	J511
N5930-050-2707	S152	N5935-201-6411	P701	N5935-295-6343	MP804
N5930-050-2707	S604	N5935-201-7181	E2365	N5935-295-6343	O792
N5930-050-2711	S608A	N5935-201-8089	P516A	N5935-295-6343	O516
N5930-201-3418	S753	N5935-201-8529	XV222	N5935-296-8871	RF852A
N5930-201-4708	A619	N5935-204-6089	TP4302	N5935-303-4327	O644
N5930-224-5559	S612	N5935-204-6168	E526	N5935-312-7985	J752A
N5930-239-3634	S502	N5935-204-6171	E524	N5935-333-3831	O551
N5930-247-8277	S506	N5935-204-8392	E36	N5935-351-9777	XV505
N5930-249-4555	S2351	N5935-221-5668	XV151	M5935-552-6463	J801
N5930-249-4555	S611	N5935-221-8612	O1703	N5935-552-6553	J2401
N5930-249-4555	S155	N5935-222-9871	XV501	N5935-568-0851	P505
N5930-249-4555	S505	N5935-222-9938	XV626	N5935-636-8293	J153
N5930-249-4555	S702	N5935-224-8150	H35	N5935-636-8293	J224
N5930-249-4556	S703	N5935-228-9139	E2378	N5935-636-8293	J350
N5930-249-4556	S154	N5935-229-5673	XV155	N5935-643-6610	H15
N5930-249-4556	S2352	N5935-237-3960	TP152	N5935-643-6897	J310
N5930-249-4556	S610	N5935-237-3960	TP602	N5935-643-9875	E35
N5930-253-3968	S601	N5935-237-3960	TP501	N5935-665-4841	E520
N5930-254-6175	S606	N5935-237-3964	J754	N5935-665-4845	E529
N5930-257-0007	S501	N5935-237-3964	J603	N5935-666-3363	XV701
N5930-259-9405	S613	N5935-237-6444	XV625	N5940-109-0932	E752
N5930-268-0323	S616	N5935-241-4068	J155	N5940-151-4031	O135
N5930-268-0324	S615	N5935-241-4068	J505	N5940-171-0198	E101
N5930-296-5160	S756	N5935-244-9919	P310	N5940-177-9887	E2351
N5930-296-5981	S151	N5935-249-3312	E2374	N5940-235-8503	E553
N5930-296-9164	S2353	N5935-249-3319	E2371	N5940-235-8593	E701
N5930-501-0390	S2355	N5935-249-3319	E534	N5940-239-6567	E751
N5930-501-0390	S603	N5935-252-2742	H738	N5940-239-6573	E151
N5930-501-3798	A618	N5935-253-2430	O131	N5940-239-6573	E503
N5930-501-3799	A615	N5935-253-2430	O306	N5940-239-7487	E129
N5930-548-3487	S2354	N5935-253-2430	O508	N5940-239-7487	E612
N5930-548-7901	S504	N5935-257-7420	MP805	N5940-243-7719	E152
N5930-548-7901	S153	N5935-257-9739	J601	N5940-243-9293	E249
N5930-548-7901	S701	N5935-258-1763	E34	N5940-248-5239	O1712
N5930-636-3541	S609	N5935-258-1763	E558	N5940-258-5185	E556
N5935-049-8426	H672	N5935-258-1767	MP108	N5940-258-5647	E502
N5935-049-8426	H155	N5935-258-4448	O743	N5940-260-0455	O3301

TABLE 8-5. STOCK NUMBER CROSS REFERENCE – Cont'd.

NAVY STOCK NUMBER	KEY DESIG.	NAVY STOCK NUMBER	KEY DESIG.	NAVY STOCK NUMBER	KEY DESIG.
N5940-260-0455	O671	N5950-645-4079	L302	N5960-262-1357	V224
N5940-272-5786	E601	N5950-645-4079	L507	N5960-262-3763	V3300
N5940-283-3752	O136	N5950-645-4090	L506	N5960-263-9910	V503
N5940-294-4359	O115	N5950-645-4806	L308	N5960-264-3002	V1355
N5940-549-2785	E119	N5950-645-5626	T703	N5960-264-3004	E314
N5940-645-1437	L504	N5950-645-6963	T502	N5960-264-3004	E155
N5945-204-6555	K151	N5950-647-5248	T501	N5960-264-3004	E706
N5945-257-6653	K705	N5950-647-6655	L151	N5960-264-3004	E626
N5945-258-7605	K703	N5950-647-6763	T151	N5960-272-9094	E761
N5945-258-9313	K501	N5950-647-9217	L228	N5960-272-9094	E312
N5945-259-9884	K3300	N5950-648-0228	T1301	N5960-272-9094	E642
N5945-295-6645	K702	N5950-648-1132	L304	N5960-296-5948	RF501
N5945-295-6647	K704	N5950-648-1178	T152	N5960-501-0802	E315
N5945-295-6648	K701	N5950-648-2535	L601	N5960-548-9851	V156
N5945-295-6992	K152	F5955-372-3414	E527	N5960-669-8808	E313
N5950-194-9002	T153	N5960-107-8133	V502	N5965-387-6852	O606
N5950-219-6512	L351	N5960-116-9926	V505	N5965-387-6869	H607
N5950-219-6578	L1356	N5960-116-9960	V151	N5970-117-5146	E109
N5950-250-7528	T102	N5960-151-7568	H546	N5970-117-5197	E641
N5950-251-1582	T2350	N5960-151-7568	H109	N5970-117-5197	E565
N5950-251-1597	T101	N5960-166-7663	V603	N5970-151-7970	E120
N5950-251-1601	T605	N5960-166-7667	V601	N5970-151-8012	E621
N5950-254-9756	L603	N5960-166-7865	V155	N5970-151-8012	E550
N5950-255-2938	L358	N5960-170-4582	V625	N5970-171-8012	E105
N5950-255-3512	T103	N5960-188-1541	E538	N5970-181-8028	E107
N5950-255-3968	T701	N5960-188-3577	V101	G5970-184-2003	H42
N5950-256-5818	T702	N5960-188-8612	V501	G5970-198-9306	A107
N5950-256-7354	L1362	N5960-189-5458	V609	G5970-198-9306	E508
N5950-257-1624	T504	N5960-193-5087	V626	G5970-198-9306	A708
N5950-257-3806	L1301	N5960-193-5145	V703	G5970-198-9307	TB613
N5950-263-1708	L1358	N5960-193-5145	V606	G5970-198-9308	O116
N5950-263-1709	L1309	N5960-194-9408	CR301	G5970-198-9308	E622
N5950-265-0177	L1304	N5960-224-4868	CR502	G5970-198-9311	A106
N5950-265-0658	L1352	N5960-224-4871	CR1350	G5970-198-9311	A709
N5950-265-0941	L1303	N5960-224-4871	CR601	N5970-198-9312	E114
N5950-265-0942	L1363	N5960-228-0033	V610	G5970-198-9312	E116
N5950-265-0970	L2311	N5960-228-0033	V103	G5970-198-9312	E117
N5950-266-0627	L1302	N5960-228-0033	V3308	G5970-198-9312	E533
N5950-266-9045	L355	N5960-228-3786	V701	G5970-198-9312	E535
N5950-268-8822	L1355	N5960-237-6917	V3306	G5970-198-9312	E2355
N5950-309-5351	L306	N5960-246-4581	H2351	G5970-198-9312	E611
N5950-328-9788	Z601	N5960-246-4581	H626	G5970-222-6371	E509
N5950-346-9181	T222	N5960-246-4581	H111	G5970-222-6371	MP509
N5950-368-3597	L508	N5960-247-8748	V222	N5970-222-6374	E108
N5950-372-2409	L230	N5960-248-3060	V706	G5970-222-6374	E318
N5950-372-2429	L224	N5960-248-3089	V1305	G5970-222-6374	E627
N5950-376-9723	T301	N5960-249-4944	H120	N5970-280-4838	E106
N5950-387-0460	L307	N5960-249-4947	H624	N5970-284-7218	O556
N5950-387-1456	L301	N5960-262-0015	E311	N5970-284-8096	O562
N5950-387-1929	L602	N5960-262-0015	E154	N5970-285-0067	E554
N5950-392-6733	L510	N5960-262-0015	E625	G5970-295-7655	MP202
N5950-392-6734	L505	N5960-262-0015	E705	N5970-296-4701	E643
N5950-506-5796	T601	N5960-262-0015	E223	N5970-296-4701	E112
N5950-519-4739	T155	N5960-262-0152	V1350	N5970-296-5441	E104
N5950-519-4763	L222	N5960-262-0152	V605	N5970-310-7051	E522
N5950-519-8998	L221	N5960-262-0152	V704	N5970-311-1438	E559
N5950-519-9001	T604	N5960-262-0167	V3305	N5970-313-8205	H568
N5950-539-6781	T223	N5960-262-0185	V1306	N5970-644-2896	E113
N5950-552-1124	T105	N5960-262-0185	V106	N5975-160-4920	H313
N5950-645-0952	T503	N5960-262-0185	V604	N5975-281-0328	E17
N5950-645-1579	T704	N5960-262-0210	V105	N5975-281-0393	E16
N5950-645-3249	L303	N5960-262-0210	V1353	N5975-284-6100	E18
N5950-645-3295	L501	N5960-262-0345	E256	N5975-309-0641	E555
N5950-645-3301	L502	N5960-262-1357	V301	N5975-378-1591	H706

TABLE 8-5. STOCK NUMBER CROSS REFERENCE — Cont'd

NAVY STOCK NUMBER	KEY DESIG.
N5975-378-1591	MP749
N5975-636-4408	E320
N5975-636-4408	E562
N5985-240-0666	Z2350
N5985-265-8632	RF852
N5985-296-1710	RF752
N5985-387-2716	O555
N5985-387-2725	E523
N5985-387-2789	RF856
N5985-387-2794	RF751
N5985-387-2795	RF754
N5985-636-4175	RF855
N5985-642-8749	RF503A
N5985-696-7988	RF502
N5995-173-6132	E506
N5995-283-2574	O579
N5999-643-8012	E501
N5999-643-8017	O618
N6105-238-2962	B502
N6105-351-6864	B701A
N6105-635-6018	B755
N6105-635-6969	B503A
N6105-643-2220	B702
N6105-643-2220	B2350B
N6105-643-2220	B601B
N6130-295-2289	CR501
N6130-635-8083	CR701
N6135-120-1020	BT1
G6145-125-5274	W701
N6145-161-0880	W31
N6145-161-0909	W2356
N6145-161-0911	W2355
N6145-161-0913	W2354
N6145-170-8737	W29
N6145-170-8737	W17
G6145-184-1110	W45
N6145-184-6116	W37
G6145-186-1460	W30
G6145-192-7167	W32
G6145-192-7217	W34
G6145-192-7219	W33
N6145-283-9476	W28
N6145-635-2786	W36
N6145-635-2786	W35
N6210-250-5472	I612
N6210-299-6112	I611
N6210-299-6723	XDS611
N6230-264-8261	O43
G6240-155-8706	I601
G6240-179-1813	I151
G6240-179-1813	I501
G6240-223-9100	I610
N6250-299-5240	XDS601
N6250-508-5842	XI501
N6250-508-5842	XII51
N6625-250-7015	M601
N6625-250-7015	M2350
N6625-250-7015	M501
N6625-260-1440	E13
N6625-260-1441	E14
N6625-260-1442	E15
N6625-265-9692	H606
N6625-539-8300	E812
N6625-635-4242	M502
N6625-644-3176	O129
N6695-599-5445	O604
G8040-237-8716	MP702
G8040-273-8716	MP303
G8040-273-8716	MP301
W9150-233-5575	MP703
G9330-281-2998	H662
G9330-281-9876	MP602
G9505-191-1635	MP707

SIGNAL CORPS	KEY DESIG.
NRV22508	R651
R37062	H22
1B302-45	W36
1B805.2	W30
1B3016-3.8	W701
1B3016-19.5	W33
1B3016-24.1	W34
1B4016-14	W32
1F425-5A	W28
1F425-6	W31
1F425-9A	W29
1F425-58A	W2356
1F425-59A	W2355
1F425-62A	W2354
1F425-88A	W35
2A384-24	A706
2A394-7	H725
2A478.2-4	H708
2A1344-162	O27
2A1344-164	O49
2A1382-9	A718
2A1404.8	H709
2A1840-1	RF854
2A2665-30	A709
2A2665-31	A708
2A2822.14-1	A716
2B275-8	A616
2B275-9	H607
2C5130-212-1	Z509
2C5611-19	XV505
2C5612-11	Z511
2J2C40	V505
2J2D21W	V706
2J4B31	V155
2J5CP1A	V625
2J5C22	V156
2J5J26	V502
2J6AG7	V103
2J6AG7	V610
2J6AH6	V601
2J6AL5W	V604
2J6AL5W	V704
2J6AU6	V605
2J6L6GA	V608
2J6SN7WGT	V101
2J7BP7A	V609
2J12AU7	V603
2J371B	V151
2J991	I151
2J991	I501
2J5684/C3J/A	V701
2RC42BF473J	R534

SIGNAL CORPS	KEY DESIG.
2XH19.3	E527
2ZA1352-204	H606
2ZA1352-209	H662
2ZK2636-2	H544
2Z125-147	I611
2Z141-1	R524
2Z305-5	O54
2Z306-30	O616
2Z307-125	O656
2Z307-127	O651
2Z307-128	O652
2Z307-129	O660
2Z307-138	E14
2Z307-139	E15
2Z307-140	E13
2Z308-201	E34
2Z308-201	E558
2Z308-349	E36
2Z380-120	O657
2Z380-121	O653
2Z380-129	A531
2Z395.100	Z2350
2Z558-68	W103
2Z558-80	W508
2Z760-22	O588
2Z770-6.58	E602
2Z1239.154	A707
2Z1239.169	A609
2Z1239.189	A617
2Z1239.286	A527
2Z1239.287	A524
2Z1239.288	A522
2Z1239.294	A526
2Z1239.295	A530
2Z1239.296	A521
2Z1244-204	A111
2Z1244-204	A606
2Z1244-205	A103
2Z1244-206	A113
2Z1244-207	A529
2Z1244-228	A721
2Z1244-267	A702
2Z1244-267	A112
2Z1244-267	A2354
2Z1244-267	A502
2Z1244-273	A723
2Z1244-309	A532
2Z1409-269	O654
2Z1409-275	O524
2Z1409-276	O18
2Z1409-277	O586
2Z1409-277	MP628
2Z1409-277	O146
2Z1409-287	O692
2Z1409-287	O142
2Z1409-287	O317
2Z1409-287	O573
2Z1409-289	H562
2Z1409-294	O546
2Z1409-297	O696
2Z1409-299	H535
2Z1409-300	H563
2Z1409-301	H534
2Z1409-314	O47

TABLE 8-5. STOCK NUMBER CROSS REFERENCE — Cont'd.

SIGNAL CORPS	KEY DESIG.	SIGNAL CORPS	KEY DESIG.	SIGNAL CORPS	KEY DESIG.
2Z1409-315	O46	2Z2712.53	O579	2Z3868.114	O510
2Z1409-320	O45	2Z2712.88	O3301	2Z3876.151	O533
2Z1480.83	H561	2Z2712.88	O671	2Z3876.164	O698
2Z1578-44	A623	2Z2712.199	O135	2Z4028-16	E505B
2Z1578-44	A118	2Z2712.262	O530	2Z4028-17	E505A
2Z1605-25	O743	2Z2712.263	O723	2Z4048-4	O662
2Z1607-10	O778	2Z2712.266	O304	2Z4324-10	O138
2Z1607-113	O512	2Z2712.266	O102	2Z4324-10	O568
2Z1612.16	O303	2Z2712.266	O674	2Z4394-9	O41
2Z1612.16	O507	2Z2712.320	E506	2Z4618-146	T151
2Z1619-12	O516	2Z2712.344	O1712	2Z4866.351	O515
2Z1619-12	O792	2Z2725.2	O136	2Z4866.385	O1707
2Z1619-50	O739	2Z2935-160	O110	2Z4866.413	O784
2Z1619-50	O638	2Z2999.16	E2378	2Z4866.476	O1722
2Z1619-118	O787	2Z3021.253	J155	2Z4866.570	O307
2Z1619-122	O1703	2Z3021-254	J505	2Z4866.600	O1730
2Z1866.486	O108	2Z3025-55	J228	2Z4866.601	O1729
2Z1891-20.39	Z151	2Z3032-39	J701	2Z4866.602	O1731
2Z1926-3	RF503	2Z3039-21	J702	2Z4867.784	O114
2Z1927-30	A517	2Z3043-4	J151	2Z4867.784	O576
2Z1927-37	A516	2Z3046.27	J601	2Z4868.111	O639
2Z2309-11	O31	2Z3046.28	J508	2Z4868.978	O508
2Z2542.209	H543	2Z3046.29	J751	2Z4868.978	O131
2Z2636-47	H309	2Z3062-167	TP301	2Z4868.979	O1311
2Z2636-47	H540	2Z3062-188	J517	2Z4868.995	O658
2Z2636-47	H142	2Z3062-225	TP602	2Z4868.1073	O701
2Z2636-47	H633	2Z3062-255	TP501	2Z4868.1074	O724
2Z2642.80	H109	2Z3062-271	TP502	2Z4868.1077	O782
2Z2642.80	H546	2Z3062-271	TP601	2Z4868.1078	O781
2Z2642.171	H2352	2Z3062-271	TP701	2Z4868.1081	O783
2Z2642.209	H742	2Z3062-271	TP101	2Z4868.1084	O133
2Z2642.209	H104	2Z3062-285	J511	2Z4868.1084	O675
2Z2642.210	H730	2Z3064-150	P757	2Z4868.1084	O592
2Z2642.210	H635	2Z3073-36	P701	2Z4868.1085	O1705
2Z2642.210	H542	2Z3080-25	P702	2Z4868.1088	O1702
2Z2642.211	H310	2Z3082-98	P751	2Z4868.1090	O130
2Z2642.211	H137	2Z3082-99	P508	2Z4868.1090	O1307
2Z2642.243	H107	2Z3082-100	P301	2Z4868.1090	O583
2Z2642.243	H3300	2Z3191-423	E526	2Z4868.1093	O104
2Z2642.243	H541	2Z3191-424	E520	2Z4868.1094	O123
2Z2642.313	H311	2Z3191-426	E524	2Z4868.1096	O132
2Z2642.313	H513	2Z3191-427	E529	2Z4868.1096	O513
2Z2642.313	H748	2Z3194-54	E103	2Z4868.1100	O645
2Z2642.313	H139	2Z3194-85	E552	2Z4868.1101	O641
2Z2642.383	H35	2Z3194-89	RF852A	2Z4868.1102	O640
2Z2642.521	H120	2Z3262-77	E523	2Z4868.1103	O636
2Z2642.527	H624	2Z3273-296	O1610	2Z4868.1103	O695
2Z2642.530	H733	2Z3273-300	O1602	2Z4868.1104	O634
2Z2642.540	H672	2Z3295-174	O620	2Z4868.1105	O633
2Z2642.585	H18	2Z3295-197	RF751	2Z4868.1106	O632
2Z2642.588	H555	2Z3350-123	O302	2Z4868.1108	O629
2Z2642.592	H554	2Z3351-306	A602	2Z4868.1110	O637
2Z2642.600	E2368	2Z3351-319	A611	2Z4868.1110	O1312
2Z2642.624	H15	2Z3351-322	A620	2Z4868.1110	O509
2Z2642.625	H16	2Z3351-322	A116	2Z4868.1112	O126
2Z2642.650	H566	2Z3351-322	A514	2Z4868.1112	O525
2Z2642.673	H312	2Z3351-325	A304	2Z4868.1117	O111
2Z2642.685	H127	2Z3351-371	A119	2Z4868.1117	O537
2Z2642.685	H618	2Z3351-374	A528	2Z4868.1123	O305
2Z2642.686	H615	2Z3351-498	A221	2Z4868.1124	O1309
2Z2642.687	H738	2Z3607A-11	Z101	2Z4868.1126	O590
2Z2642.793	H13	2Z3613-12	O655	2Z4868.1183	A604
2Z2642.814	H133	2Z3723-354	N502	2Z4868.1186	O1711
2Z2642.6459	H565	2Z3822-756	E510	2Z4868.1274	O1710

TABLE 8-5. STOCK NUMBER CROSS REFERENCE — Cont'd

SIGNAL CORPS	KEY DESIG.	SIGNAL CORPS	KEY DESIG.	SIGNAL CORPS	KEY DESIG
2Z4868.1275	O1706	2Z6820.448	A2353	2Z7390-260	P308
2Z4868.1308	O850	2Z6820.449	A2355	2Z7390-260	P511
2Z4872-241	O610	2Z6820.468	O318	2Z7390-290	J350
2Z4875-473	O699	2Z6820.468	O594	2Z7390-290	J224
2Z4878-1407	O611	2Z6820.468	O691	2Z7390-290	J153
2Z4878-1425	O617	2Z6820.502	A512	2Z7586-222	K703
2Z4878-1525	O697	2Z6820.503	A503	2Z7586-223	K702
2Z4884A-9	A621	2Z6820.538	H313	2Z7587-289	K705
2Z4884A-10	A622	2Z6840-162	Z161	2Z7587-304	K151
2Z4928-103	H617	2Z6840-173	W2351	2Z7589-199	K701
2Z4928-103	H129	2Z6978-16	H130	2Z7589-200	K704
2Z4928-103	H314	2Z6978-16	H1306	2Z7590-255	K152
2Z4928-103	H520	2Z6978-16	H521	2Z7592-117	K3300
2Z4928-105	H131	2Z6978-17	H132	2Z7702-68	O34
2Z4976-6	H731	2Z6978-20	H126	2Z7780-155	O608
2Z4976-6	H138	2Z6978-20	H630	2Z7858-154	O125
2Z5015-103	HR701	2Z6978-20	H302	2Z7858-154	O316
2Z5015-103	HR601	2Z6978-23	H737	2Z7858-154	O577
2Z5015-103	HR151	2Z6978-23	H648	2Z7858-223	O619
2Z5015-103	HR2351	2Z6978-23	H317	2Z7858-224	O609
2Z5015-103	HR501	2Z6978-23	H528	2Z7858-225	O605
2Z5091-116	A613	2Z7056-33	H31	2Z7858-226	O666
2Z5186-5	B701B	2Z7090.125	O17	2Z7858-227	O604
2Z5534	J752	2Z7090.131	E2360	2Z7858-228	O606
2Z5534	J602	2Z7090.142	N104	2Z7858.243	O630
2Z5727-183	O30	2Z7090.189	A507	2Z7858.244	O631
2Z5821-178	E2356	2Z7090.190	A506	2Z7858-270	O578
2Z5822-645	H533	2Z7090.191	O520	2Z7858-293	O659
2Z5822-693	O531	2Z7090.216	E320	2Z7858-310	A725
2Z5822-699	O598	2Z7090.216	E562	2Z7858-328	H558
2Z5822-700	O597	2Z7091-61	A106	2Z8051-62	A607
2Z5822-711	H663	2Z7091-558	O134	2Z8051-66	O564
2Z5822-712	E609	2Z7091-558	MP631	2Z8051-77	O51
2Z5822-712	E110	2Z7091-558	O574	2Z8051-78	O52
2Z5822-713	E608	2Z7091-561	O109	2Z8051-79	O53
2Z5883-150	XDS601	2Z7091-561	O702	2Z8063-29	MP629
2Z5883-261	XI151	2Z7091-562	N603	2Z8063-29	O140
2Z5883-261	XI501	2Z7091-562	N101	2Z8063-29	O585
2Z5888-5	I610	2Z7091-562	N503	2Z8063-30	O581
2Z5952	I601	2Z7091-578	A603	2Z8063-42	O315
2Z5991-235	XDS611	2Z7091-602	O124	2Z8076-189	N604
2Z6125-197	I612	2Z7091-602	O2352	2Z8077A-4	O1734
2Z6188-1	O798	2Z7091-602	O517	2Z8085-1.34	O129
2Z6191-14	W101	2Z7091-610	A114	2Z8085-1.43	H658
2Z6820.223	A608	2Z7091-612	A107	2Z8086-5	O758
2Z6820.370	A104	2Z7091-613	N102	2Z8201.77	O621
2Z6820.370	A504	2Z7091-617	E111	2Z8201.78	O625
2Z6820.376	A610	2Z7091-618	O116	2Z8201.80	O626
2Z6820.377	A601	2Z7091-627	A11	2Z8201.81	O624
2Z6820.391	A605	2Z7091-631	A520	2Z8201.83	O514
2Z6820.391	A505	2Z7255-59	O1611	2Z8202.21	H301
2Z6820.405	A101	2Z7258.114	H664	2Z8202.21	H627
2Z6820.406	A110	2Z7259-151	H124	2Z8202.21	H712
2Z6820.406	A518	2Z7390-18B	P302	2Z8202.21	H123
2Z6820-407	A615	2Z7390-18B	P503	2Z8203-634	O690
2Z6820.409	A109	2Z7390-19B	J501	2Z8203-635	O689
2Z6820.411	A618	2Z7390-21B	P3	2Z8203-662	O532
2Z6820.412	A619	2Z7390-29B	E35	2Z8203-727	O1608
2Z6820.414	A612	2Z7390-58A	J152	2Z8276-70	E2374
2Z6820.416	A12	2Z7390-58A	J302	2Z8276-73	O551
2Z6820-417	A525	2Z7390-58A	J503	2Z8276-74	RF852
2Z6820.423	H645	2Z7390-88	P307	2Z8276-88	O595
2Z6820.424	H646	2Z7390-88	P224	2Z8276-100	J752A
2Z6820.447	A2357	2Z7390-182A	P505	2Z8301-39	O618

TABLE 8-5. STOCK NUMBER CROSS REFERENCE — Cont'd.

SIGNAL CORPS	KEY DESIG.	SIGNAL CORPS	KEY DESIG.	SIGNAL CORPS	KEY DESIG.
2Z8304.57	E705	2Z8877.681	E2359	3C1084Z19-28	L1358
2Z8304.57	E154	2Z8877.701	O309	3C1084Z19-29	L1362
2Z8304-57	E625	2Z8877.805	O1305	3C1084Z19-30	L1363
2Z8304.57	E311	2Z8877.805	O527	3C1084Z19-31	L2311
2Z8304.57	E223	2Z8877.805	O112	3C1084Z19-32	L1303
2Z8304.275	E314	2Z8879-363	O312	3C1084Z19-35	T1301
2Z8304.275	E706	2Z8879-363	O542	3C1084Z19-36	T301
2Z8304.275	E155	2Z8879-363	O139	3C1084Z19-37	L301
2Z8304.275	E626	2Z8879-363	O685	3C1084Z19-38	L303
2Z8304.276	E761	2Z8879-364	O589	3C1084Z19-39	L304
2Z8304.276	E312	2Z8879-371	O526	3C1084Z19-41	L508
2Z8304.277	E313	2Z8879-384	E127	3C1084Z19-42	L510
2Z8304.297	E315	2Z8879-385	E128	3C1084Z19-43	L505
2Z8304.317	E551	2Z8879-386	E123	3C-1084Z19-44	L506
2Z8308-38	E538	2Z8879-387	E124	3C1084Z19-46	L224
2Z8320-65	O612	2Z9057-82	E563	3C1084Z19-49	L228
2Z8320-69	O1701	2Z9403.170	E503	3C2009D	L601
2Z8320-70	O107	2Z9403.170	E151	3C2012-8	L602
2Z8320-74	O521	2Z9617-268	T504	3DA1-326	C159
2Z8320-76	O693	2Z9617-269	T101	3DA1.500-62	C222
2Z8320-77	O522	2Z9617-270	T702	3DA1.500-62	C301
2Z8405-127	A302	2Z9617-271	T605	3DA4.700-21	C310
2Z8405-130	A501	2Z9617-272	T152	3DA4.700-21	C532
2Z8405-130	A102	2Z9617-275	T503	3DA5-238	C509
2Z8552-101	O780	2Z9618-145	T701	3DA50-292	C629
2Z8552-119	O518	2Z9621-434	T704	3DA50-305	C631
2Z8634-56	E540	2Z9627-185	T102	3DA50-324	C105
2Z8634-56	E126	2Z9627-186	T103	3DA50-476	C665
2Z8634-56	E640	2Z9627-189	T502	3DA100-718	C525
2Z8663	XV701	2Z9627-209	T601	3DA100-720	C606
2Z8670.33	XV608	2Z9825.62.653	S601	3DA100-770	C101
2Z8670.33	XTY501	2Z9825-62.701	S2353	3DA100-770	C605
2Z8674.147	XV155	2Z9900.33	T703	3DA100-972	C516
2Z8674.175	XV151	2Z10008-95	RF855	3DA100-983	C661
2Z8675.34	P228	2Z10008-172	RF502	3DA250-348	C706
2Z8677.94	XV301	2Z10008-177	RF752	3DA250-422	C708
2Z8677.94	XV704	2Z10008-178	RF503A	3DA250-604	C701
2Z8677.94	XV106	2Z10008-179	RF501	3DA250-605	C751
2Z8677.94	XV601	2Z10008-179	RF851	3DA250-606	C513
2Z8677.99	XV224	2Z10008-180	RF856	3DA250-619	C716
2Z8677.99	XV1353	2Z12101-22.4	E316	3DA500-451	C707
2Z8677.178	E2358	2Z80760173	N602	3DA500-451	C534
2Z8678.74	XV3308	3A30	BT1	3DA500-451	C644
2Z8678.74	XV505A	3C307-5.22	L152	3DA500-814	C1367
2Z8678.74	XV101	3C307-5.23	L603	3DA500-821	C623
2Z8679.30	XV703	3C307-5.24	L307	3DB1E5-6	C512
2Z8679.30	XV105	3C323-18R	L1304	3DB1E5-6	C158
2Z8679.30	XV603	3C323-192B	L302	3DB1-137	C2350
2Z8684-14	XV625	3C323-192B	L507	3DB1-186	C507
2Z8811-2	O681	3C323-192T	L308	3DB1-186	C630
2Z8877.644	E618	3C575E-28	L501	3DB1-207	C153
2Z8877.658	O587	3C575E-33	L151	3DB1-276	C711
2Z8877.667	E539	3C575E-39	L502	3DB1-306	C662
2Z8877.667	E125	3C575E-41	L504	3DB2-142	C705
2Z8877.667	MP630	3C1081-48F	Z601	3DB2-142	C156
2Z8877.668	O127	3C1084Z19-18	L306	3DB2-142	C601
2Z8877.668	O1306	3C1084Z19-19	L351	3DB2-281	C753
2Z8877.668	O582	3C1084Z19-20	L355	3DB10-206	C522
2Z8877.668	O128	3C1084Z19-21	L358	3DB15-71	C709
2Z8877.669	O40	3C1084Z19-22	L1301	3DB750-2	C503
2Z8877.670	E548	3C1084Z19-23	L1302	3D9005-135	C660
2Z8877.673	E549	3C1084Z19-24	L1309	3D9006-28	C332
2Z8877.674	E547	3C1084Z19-26	L1355	3D9007V-17	C659
2Z8877.675		3C1084Z19-27	L1356	3D9010-63	C333

TABLE 8-5. STOCK NUMBER CROSS REFERENCE – Cont'd

SIGNAL CORPS	KEY DESIG.	SIGNAL CORPS	KEY DESIG.	SIGNAL CORPS	KEY DESIG.
3D9022-5	C334	3G320-358	E533	3K3515221	C1365
3D9025V-82	C305	3G385-65	H1311	3K3520253	C616
3D9039-8	C2351	3G1350-126	E565	3K3522221	C621
3D9045V-15	C240	3G1350-126	E641	3K3522243	C628
3D9045V-15	C1353	3G3502-05	E120	3K3527221	C102
3D9075-43	C518	3G3502-08	E105	3K3539253	C615
3D9151	C302	3G3502-08	E621	3K3547221	C713
3D9470-48	C307	3G3502-08	E550	3K3568153	C612
3D9470-48	C527	3G3502-12	E109	3K3582221	C625
3E350-2.237.4	W5	3G3503-16	E107	3K3582253	C654
3E4001.23	W2353	3G3503-20.1	E106	3K5182221	C645
3E4001.30	W501	3G3514-16	E112	3RA5110	R168
3E4001.31	W502	3G3514-16	E643	3RC20BF100J	R304
3E4001.32	W507	3G3514-20	E104	3RC20BF100J	R670
3E4001.34	W504	3H305-191	O785	3RC20BF101J	R229
3E4001.35	W37	3H305-192	O607	3RC20BF101J	R324
3E4001.64	W503	3H305-203	O1713	3RC20BF102J	R303
3E4002.19	W11A	3H345-2	B601A	3RC20BF102J	R684
3E4002.23	W4A	3H345-2	B2350A	3RC20BF103J	R653
3E4002.45	W15	3H370.3-7	O1719	3RC20BF103J	R109
3E4002.45	W16	3H388-91	B701	3RC20BF103J	R325
3E5999-7.28	W4	3H396-17	B151	3RC20BF104J	R312
3E7350-1.20.29	W11	3H396-17	B501	3RC20BF104J	R703
3E7350.1-84.13	W10	3H948.5-1	H2351	3RC20BF104J	R639
3E7350.1-90.4	W8	3H948.5-1	H626	3RC20BF105J	R106
3E7350.1-93.3	W12	3H1931-6	B601	3RC20BF105J	R1605
3E7350.1-93.4	W7	3H1931-6	B2350	3RC20BF105J	R1359
3E7350.1-180.13	W1	3H2154-132	O1733	3RC20BF151J	R129
3E7350-2.11.9	W2	3H2549-38	B701C	3RC20BF151J	R1320
3E7350-2.78.1	W3	3H2549-41	A726	3RC20BF152J	R353
3E7350-2.237.2	W14	3H2565-30	O1728	3RC20BF152J	R120
3E7350-2.237.2	W13	3H3000-200	B701A	3RC20BF152J	R1620
3E7350-2.237.3	W9	3H3000-201	B503A	3RC20BF153J	R716
3E7350-2.237.4	W6	3H3000A02-62	B601B	3RC20BF153J	R644
3F871-32	M2350	3H3000A02-62	B702	3RC20BF153J	R3319
3F871-32	M501	3H3000A02-62	B2350B	3RC20BF154J	R3325
3F871-32	M601	3H3000A06-9	B755	3RC20BF154J	R1690
3F901-59	M502	3H3000S-39	B753	3RC20BF155J	R107
3F3703-7	O555	3H3000S-174	B752	3RC20BF155J	R1691
3G80-9	O562	3H3000S-176	B602	3RC20BF181J	R1633
3G80-10	O556	3H4238-2.2	O797	3RC20BF184J	R2620
3G80-11	E554	3H4860-196	CR501	3RC20BF221J	R612
3G100-221	E623	3H4860-199	CR701	3RC20BF221J	R231
3G100-229	E522	3H5236-2	O644	3RC20BF221J	R302
3G100-247	O570	3H5236-3	E2371	3RC20BF222J	R228
3G100-247	O1717	3H5236-3	E534	3RC20BF222J	R305
3G100-248	O1718	3J1N70	CR601	3RC20BF222J	R642
3G100-248	O571	3K203312	C1363	3RC20BF223J	R128
3G100-250	E559	3K2010121	C703	3RC20BF223J	R1611
3G100-291	E566	3K2022121	C646	3RC20BF223J	R1324
3G100-293	E517	3K2022143	C648	3RC20BF224J	R3365
3G280-46	E528	3K2027021	C306	3RC20BF224J	R640
3G320-278	E535	3K2027121	C1350	3RC20BF225J	R633
3G320-278	E114	3K2027121	C104	3RC20BF225J	R1362
3G320-279	E116	3K2033121	C632	3RC20BF331J	R601
3G320-280	E117	3K2036143	C610	3RC20BF332J	R641
3G320-281	E611	3K2047121	C230	3RC20BF332J	R307
3G320-282	E2355	3K2047121	C339	3RC20BF333J	R1351
3G320-305	E318	3K2062032	C622	3RC20BF333J	R520
3G320-305	E627	3K3410321	C535	3RC20BF333J	R638
3G320-305	E108	3K3510221	C603	3RC20BF333J	R133
3G320-307	E113	3K3510253	C617	3RC20BF334J	R647
3G320-309	E622	3K3510321	C1358	3RC20BF334J	R1350
3G320-342	E555	3K3513253	C613	3RC20BF335J	R1677

TABLE 8-5. STOCK NUMBER CROSS REFERENCE — Cont'd.

SIGNAL CORPS	KEY DESIG.	SIGNAL CORPS	KEY DESIG.	SIGNAL CORPS	KEY DESIG.
3RC20BF335J	R724	3RC30BF681J	R154	3Z6250-142	R169
3RC20BF392J	R3345	3RC30BF682J	R725	3Z6568-47	R701
3RC20BF394J	R3324	3RC30BF682J	R1636	3Z6630-118	R514
3RC20BF471J	R2357	3RC30BF682J	R329	3Z6809-5	R151
3RC20BF471J	R1641	3RC30BF683J	R2602	3Z6810-41	R157
3RC20BF472J	R652	3RC30BF684J	R1697	3Z6925-3.33	TY501
3RC20BF472J	R131	3RC30BF684J	R125	3Z6960-43.4	R508
3RC20BF472J	R236	3RC30BF822J	R711	3Z7325-59	R608
3RC20BF472J	R1356	3RC30BF912J	R705	3Z7425-112	R662
3RC20BF473J	R310	3RC42GF224J	R2615	3Z7425-113	R660
3RC20BF473J	R111	3RP2922	R2617	3Z7450-179	R2618
3RC20BF473J	R611	3RU12805	R526	3Z7470-5	R609
3RC20BF474J	R655	3RV21019	R610	3Z7498-25.100	R167
3RC20BF474J	R132	3RV25017	R685	3Z7498-25.103	R1693
3RC20BF474J	R3304	3RV25017	R671	3Z7498-50.185	R1696
3RC20BF475J	R3364	3RV32517	R2350	3Z7702-68.1	O29
3RC20BF620J	R226	3RV35021	R710	3Z7702-68.2	O33
3RC20BF680J	R1367	3RV35021	R2619	3Z7702-68.3	O36
3RC20BF680J	R680	3RV41034	R682	3Z7702-68.4	O35
3RC20BF681J	R2622	3RV42533	R707	3Z8304.276	E642
3RC20BF681J	R1372	3RV45041	R721	3Z9558-39.20	S612
3RC20BF682J	R1639	3RV45041	R1365	3Z9695-8.20	S501
3RC20BF683J	R623	3RV51040	R2601	3Z9695-17.9	S2352
3RC20BF683J	R130	3RV52538	R1689	3Z9695-17.9	S610
3RC20BF684J	R614	2RV55054	R1618	3Z9695-17.9	S703
3RC20GF470J	R301	2RV55054	R110	3Z9695-17.9	S154
3RC20GF564J	R2603	3RV62523	R626	3Z9695-17.10	S611
3RC30BF101J	R153	3RV62524	R1657	3Z9695-17.10	S155
3RC30BF102J	R101	3RW6333	R515	3Z9695-17.10	S702
3RC30BF102J	R535	3RW10524	R727	3Z9695-17.10	S2351
3RC30BF103J	R723	3RW11721	R507	3Z9695-17.10	S505
3RC30BF103J	R118	3RW14717	R152	3Z9695-39	Z510
3RC30BF103J	R657	3RW15002	R518	3Z9812-7.2	S504
3RC30BF104J	R618	3RW16542	R516	3Z9812-7.2	S701
3RC30BF104J	R505	3RW16542	R719	3Z9812-7.2	S153
3RC30BF105J	R508A	3RW23737	R156	3Z9815-17	S603
3RC30BF112J	R713	3RW24320	R517	3Z9815-17	S2355
3RC30BF151J	R536	3RW27322	R663	3Z9823-3.12	S502
3RC30BF152J	R1601	3Z770-3.82	E2351	3Z9823-18.3	S756
3RC30BF153J	R632	3Z770-4.84	E751	3Z9824-102.3	S616
3RC30BF154J	R613	3Z770-5.41	E152	3Z9824-102.4	S615
3RC30BF154J	R102	3Z770-6.118	E115	3Z9824-501.1	S151
3RC30BF155J	R523	3Z770-8.95	E101	3Z9825-24.7	S753
3RC30BF221J	R162	3Z770-13.20	E632A	3Z9825-62.652	S609
3RC30BF221J	R1315	3Z770-17.28	E502	3Z9825-62.654	S606
3RC30BF222J	R718	3Z770-23.5	E631A	3Z9825-62.673	S506
3RC30BF223J	R620	3Z770-67.1	E630A	3Z9825-125.1	S2354
3RC30BF224J	R127	3Z770-72.2	E628A	3Z9863-42A	S101
3RC30BF224J	R1683	3Z770-76.1	E629A	3Z9863-52K	S602
3RC30BF225J	R522	3Z1013.11	O1301	3Z9863-52N	S152
3RC30BF331J	R648	3Z1029-10.12	O115	3Z9863-52S	S613
3RC30BF332J	R160	3Z1029-10.13	O503	3Z9863-52T	S608A
3RC30BF333J	R675	3Z1029-10.14	O504	3Z12050-6.10	E221
3RC30BF333J	R351	3Z1029-10.14	O103	3Z12101-8.1	E537
3RC30BF334J	R113	3Z1891-20.38	Z504	3Z12101-8.1	E612
3RC30BF334J	R619	3Z1891-35.18	Z153	3Z12101-8.1	E129
3RC30BF335J	R2624	3Z1891-54.1	L604	3Z12101-8.2	E757
3RC30BF472J	R616	3Z1891-87	Z501	3Z12101-8.3	E556
3RC30BF472J	R715	3Z1891-87.1	Z602	3Z12101-8.4	E249
3RC30BF472J	R112	3Z3062-255	TP152	3Z12101-22.4	E258
3RC30BF472J	R314	3Z5992-86	R627	3Z12101-22.6	E319
3RC30BF473J	R628	3Z5993-75	R697	3Z12101-22.6	E620
3RC30BF474J	R501	3Z6002-84	R509	3Z12501-7	A303
3RC30BF681J	R726	3Z6010-238	R510	5B125-5	O28

TABLE 8-5. STOCK NUMBER CROSS REFERENCE — Cont'd

SIGNAL CORPS	KEY DESIG.	SIGNAL CORPS	KEY DESIG.	SIGNAL CORPS	KEY DESIG.
6C86-1	E501	6L20926-52.82S	H724	6Z3859-25	H716
6F216	A624	6L20928-24.81S	H727	6Z4002D	O43
6F300-1060	O39	6L31209-4	E222	6Z4849D	H113
6F300-1297	O48	6L31209-4	E317	6Z4856-38	H122
6L604-3.7H	H517	6L33038	H116	6Z4856-51	H711
6L996-14-5	O663	6L50244-1	H740	6Z4856-51	H625
6L996-24.4	O1704	6L50373	H106	6Z4872	H508
6L2164-20	H151	6L50373	H616	6Z4891-14	H118
6L2164-20	H552	6L50373	H509	6Z4892-15	H603
6L2614-20	H684	6L50373-2	H510	6Z4892-16	H141
6L2704-40-9	H671	6L50456	H728	6Z4892-17	H125
6L2720-24S	H152	6L50490-2	H117	6Z4892-18	H741
6L2720-24S	H557	6L50490-3	H114	6Z4892-19	H522
6L3426-40-8	O552	6L50490-4	H623	6Z4892-21	H1303
6L3432-16-1	O547	6L54003-25	O113	6Z4892-21	H548
6L3505-18-9.10	H149	6L54003-25	O1304	6Z4895	H1301
6L3514-16-17	H539	6L54003-25	O505	6Z4895	H621
6L3522-12-28	H32	6L54006-19	O313	6Z4910Q-1	H746
6L3602-56-3S1	H569	6L54006-19	O501	6Z4910Q-1	H1302
6L3676-32-10	H609	6L54028	H604	6Z4910Q-1	H547
6L3800-10	H701	6L58353-2	H732	6Z4910Q-3	H136
6L3804-20F	H11	6L58404-6	H134	6Z4910R	H119
6L3905-16.1	H2360	6L58404-6	H628	6Z5025-3	H643
6L3905-16.1	H553	6L58404-6	H1305	6Z5025-3	H316
6L3942-3-2	O553	6L58404-6	H525	6Z6017-38	H734
6L3945-20	H654	6L58406-5	H315	6Z6621-2	O24
6L3946-20-2	H649	6L58406-5	H501	6Z6917-8	H145
6L3946-20-2	H736	6L58408	H1308	6Z6917-8	H1310
6L3946-20-2	H147	6L58408	H629	6Z6917-8	H538
6L3946-20-2	H318	6L73499	H602	6Z7852-3	H21
6L3946-33	H148	6N7602-5	H44	6Z7852-3	H550
6L3946-33	H652	6N7609-4	H43	6Z7852-8	H37
6L3946-33	H321	6N8583	H42	6Z7901.1	O25
6L3946-33	H531	6Q51735AH	H26	6Z7904A.2-1	O50
6L3946-202	H529	6Q60229	H27	6Z8093-8	O301
6L4711-78	H33	6R4561-1	H25	6Z8093-8	MP106
6L4766-9.3SF	H564	6R8440-8	H46	6Z8093-8	O661
6L4768-13.8S	H723	6R16091	H28	6Z8093-8	O540
6L4768-20.8S	H747	6R24677	H29	6Z8440-9	H45
6L4770-12.8SF	H504	6R36752	H30	6Z8585-6	H36
6L4770-15.8KSF	H1309	6R39340	H47	6Z8585-7	H39
6L4770-15.8KSF	H614	6R39340-1	H48	6Z8782-4	O32
6L4774-14.81SF	H108	6R55516-18.4	H40	6Z8900A-5	O44
6L4774-20.8KSF	H644	6R55568.1	H41	6Z8900A-5	O319
6L4774-22SF	H103	6R57414.10	H34	6Z8900A-5	O145
6L4774-22SF	H308	6R59349	H23	6Z8900A-5	O694
6L4774-22SF	H503	6ZK4877-6	H112	6Z8900A-5	O596
6L4774-22SF	H632	6Z5U25-3	H144		
6L4774-27.8KS	H610	6Z1817-1	O21		
6L4774-27.8KSF	H653	6Z1932-43	E2364		
6L4774-28.8KSF	H128	6Z1932-56	E2365		
6L4774-28.8KSF	H1307	6Z1933-69	O523		
6L4774-28.8KSF	H505	6Z1933-69	O117		
6L4774-36.81S	H12	6Z1933-86	O786		
6L4774-40.86	H556	6Z3660-19	O37		
6L4906-16.81SF	H670	6Z3764-3	H38		
6L7916-6-21SS	H726	6Z3809-32	H551		
6L10925-56.81	H306	6Z3809-34	H19		
6L10925-56.81	H527	6Z3809-45	H571		
6L17006-30.8K	H322	6Z3809-46	H20		
6L20130-18F	H223	6Z3809-46	H549		
6L20130-21S	H221	6Z3858-64	E16		
6L20926-24.81	H307	6Z3858-65	E18		
6L20926-24.81	H502	6Z3858-66	E17		

TABLE 8-6. LIST OF MANUFACTURERS

ABBREVIATION	PREFIX	NAME	ADDRESS
		Adel Precision Products	Huntington, West Virginia
	CYA	Alden Products Co.	117 N. Main Street Brockton, Massachusetts
	CCQ	Allied Control Co.	2 East End Avenue New York, New York
		American Air Filter Co., Inc.	Central Avenue at 2nd Street Louisville 8, Kentucky
	CBIX	American Brass Co.	414 Meadow Street Waterbury, Connecticut
	CBMV	American Chain & Cable Co., Inc.	York, Pennsylvania
Amphenol	CPH	American Phenolic Corp.	1830 So. Fifty-Fourth Avenue Chicago, Illinois
	CBGV	American Relay & Controls Inc.	4900 Flournoy Street Chicago, Illinois
	CAGK	Amperite Company	561 Broadway New York, New York
	CHH	Arrow-Hart & Hegeman Elect. Co.	102 Hawthorne Street Hartford, Connecticut
	ASTN	Astron Corp.	255 Grant Avenue East Newark, New Jersey
Atlan India Rub		Atlantic India Rubber Works Inc.	571 W. Polk Street Chicago 7, Illinois
	AAEP	Augat Bros., Inc.	33 Perry Avenue Attleboro, Massachusetts
BB Chem		B.B. Chemical Co.	784 Memorial Drive Cambridge 39, Massachusetts
	CAYU	Barry Corp., The	179 Sidney Street Cambridge, Massachusetts
		Bead Chain Mfg. Co.	Bridgeport 5, Connecticut
	CAYV	Bendix Aviation Corp.	Teterboro, New Jersey
	CAIS	Birtcher Corp., The	5087 Huntington Drive Los Angeles 32, California
	BE	Burndy Engineering Co., Inc.	107 Bruckner Blvd. New York, New York
	CFA	Bussmann Mfg. Co.	2538 W. University Street St. Louis, Missouri
Cambridge Therm	CAMQ	Cambridge Thermionic Corp.	445 Concord Avenue Cambridge, Massachusetts
		Camloc Fastener Corp	22 Spring Valley Road Paramus, New Jersey
	CED	Cannon Electric Development Co.	3291 Humboldt Street Los Angeles 31, California

TABLE 8-6. LIST OF MANUFACTURERS — Cont'd

ABBREVIATION	PREFIX	NAME	ADDRESS
	CBN	Central Radio Laboratory Div. of Globe Union	900 E. Keefe Avenue Milwaukee, Wisconsin
	CAQV	Chickson Tool Co.	Brea, California
	CAID	Chrysler Corp.	12200 E. Jefferson Avenue Detroit, Michigan
	CIN	Cinch Mfg. Co.	2339 W. Van Buren Street Chicago, Illinois
	CAIG	Condenser Products Co.	1369-1375 North Branch Street Chicago, Illinois
	CCC	Continental Carbon Co.	13900 Lorain Avenue Cleveland 11, Ohio
		Crucible Steel Company of America	Harrison, New Jersey
	CASO	Culver-Sterns Mfg. Co.	Worcester, Massachusetts
C-H	CAE	Cutler Hammer, Inc.	1333 W. St. Paul Avenue Milwaukee, Wisconsin
Dialco	CAYZ	Dial Light Corp.	900 Broadway New York, New York
	CAKZ	Diamond Instrument Co.	Wakefield, Massachusetts
		Driv-Lok Pin Co.	Park Ave., & Chauncey Street Sycamore, Illinois
	CBFZ	Dupont DeNemours, E.I., Co., Inc.	Wilmington, Delaware
		Dzus Fastener Co., Inc.	P.O. Box 185 Babylon, New York
	CARB	Eastern Air Devices, Inc.	285 Dean Street Brooklyn, New York
	CEB	Eby, Hugh H., Inc.	4700 Stenton Avenue Philadelphia, Pennsylvania
Esna		Elastic Stop Nut Corp. of America	2330 Vauxhall Road Union, New Jersey
	CER	Erie Resistor Corp.	644 W. 12th Street Erie, Pennsylvania
		Esso Standard Oil Co.	Hutchinson River Parkway Pelham 65, New York
	CFT	Federal Telephone & Radio Corp.	100 Kingsland Road Clifton, New Jersey
		Felters Co., The	210 South Street Boston, Massachusetts
		Filtron Co., Inc.	131-05 Fowler Avenue Flushing, New York
		Garlock Klozure	Palmyra, New York

TABLE 8-6. LIST OF MANUFACTURERS — Cont'd.

ABBREVIATION	PREFIX	NAME	ADDRESS
GE	CG	General Electric Co.	1 River Road Schenectady 5, New York
		Globe Rubber Works, Inc.	Boston, Massachusetts
	CAWE	Hansen Mfg. Co.	1934 Virgil Blvd. Princeton, Indiana
		Hartford Steel Ball Co.	Hartford, Connecticut
		Haydon Mfg. Co., Inc.	Forestville, Connecticut
Hazeltine Elec	CHZ	Hazeltine Electronics Division of Hazeltine Corporation	59-25 Little Neck Parkway Little Neck, L.I., N.Y.
		Hetherington, Robert & Son, Inc.	Wilmington, Delaware
	CATB	Hobbs, John W. Corp.	Springfield, Illinois
	CBNX	Hoyt Co., George T.	549 Rutherford Avenue Charlestown, Massachusetts
		Howe Engineering Co.	5800 Massachusetts Avenue Indianapolis 18, Indiana
		Hubbard & Co.	233 Broadway New York, New York
		Imperial Brass Mfg. Co.	New York, New York
IPC	CARO	Industrial Products Co.	Brookfield Street Danbury, Connecticut
	CIR	International Resistance Corp.	401 N. Broad Street Philadelphia, Pennsylvania
	CANA	I-T-E Circuit Breaker Co.	1950 Hamilton Street Philadelphia, Pennsylvania
	CAUZ	Jeffers Electronics Co.	Dubois, Pennsylvania
		Johns-Manville Corp.	New York, New York
	CEJ	Johnson, E.F., Co.	Waseca, Minnesota
Jones HB	CJC	Jones, Howard B.	2300 W. Wabansia Avenue Chicago, Illinois
	CBXX	Ketay Mfg. Corp.	555 Broadway New York, New York
	CBZG	Kulka Electric Mfg. Co., Inc.	30 South Street Mt. Vernon, New York
	CLR	Leach Relay Co.	5915 Avalon Blvd. Los Angeles, California
		Linear Inc.	State Road & Levick Street Philadelphia 35, Pennsylvania
	CLF	Littelfuse, Inc.	1865 Miner Street Des Plaines, Illinois

TABLE 8-6. LIST OF MANUFACTURERS — Cont'd

ABBREVIATION	PREFIX	NAME	ADDRESS
	CMY	Marion Electric Co.	Marion, Indiana
	CAYK	Marlin-Rockwell Corp.	402 Chandler Street Jamestown, New York
	CMU	Micro Switch Corp.	Freeport, Illinois
Millen	CJA	Millen, James, Mfg. Co., Inc.	150 Exchange Street Malden, Massachusetts
		National Lock Washer Co.	40 Herman Street Newark 5, New Jersey
		Neosil Corp.	Jersey City, New Jersey
		New Departure Mfg. Co. Div. General Motors Corp.	Bristol, Connecticut
	COC	Oak Mfg. Co.	1200 N. Clybourne Avenue Chicago, Illinois
		Patton-MacGuyer Co.	17 Virginia Avenue Providence 5, Rhode Island
		Plumb Co. Fayette R., Inc.	Philadelphia, Pennsylvania
	CARE	Potter & Brumfield Mfg. Co., Inc.	Princeton, Indiana
		Prestole Corp.	1351 Miami Street Toledo 5, Ohio
	CPB	Price Electric Corp.	332 E. Church St. & 2nd Sts Frederick, Maryland
		Propellair Div. of Robbins and Meyers Inc.	Springfield, Ohio
	CAOR	Radio Frequency Labs.	Boonton, New Jersey
	CRP	Raytheon Mfg. Co.	190 Willow Street Waltham, Massachusetts
		Saratoga Industries	Saratoga, New York
		Schrader's, A., and Son	470 Vanderbilt Avenue Brooklyn 17, New York
	CBET	Scintilla Magneto Div. of Bendix Aviation Corp.	Sidney, New York
	CAXO	Shakeproof, Inc.	2573 N. Keeler Avenue Chicago, Iilinois
	CFW	Sickles, F.W., Co.	Springfield, Massachusetts
	CBAM	SKF Industries	Front Street and Erie Avenue Philadelphia, Pennsylvania
	CSQ	Spencer Thermostat Co.	34 Forest Street Attleboro, Massachusetts
	CSF	Sprague Electric Co.	North Adams, Massachusetts

TABLE 8-6. LIST OF MANUFACTURERS — Cont'd.

ABBREVIATION	PREFIX	NAME	ADDRESS
		Star Kimble Motor Div. Miehle Printing Press & Mfg. Co.	200 Bloomfield Avenue Bloomfield, New Jersey
		Stevens Mfg. Co.	Richland Trust Bldg. Mansfield, Ohio
		Stevens Walden, Inc.	Worcester, Massachusetts
	SHH	H.H. Sticht Co., Inc.	27 Park Place New York 7, New York
	STIP	Superior Fuse & Mfg. Co.	221-223 Hudson Street Hoboken, New Jersey
	CBEA	Trico Fuse Mfg. Co.	Milwaukee, Wisconsin
		Trimont Mfg. Co.	Worcester, Massachusetts
		Ucinite Co. Div. of United Carr Fastener Co.	1 Nevada Street Newtonville, Massachusetts
		Unimax Switch Div. of W.L. Maxson Corp.	460 W. 34th Street New York 1, New York
	CUF	United Carr Fastener Co.	450 Main Street Cambridge, Massachusetts
		Utica Tool Works	Utica, New York
		Vlier Mfg. Co.	99 Lincoln Park Newark, New Jersey
		Waldes Kohinoor, Inc.	Long Island City, New York
	CAO	Ward Leonard Co.	6 South Street Mount Vernon, New York
	CAYF	Watlow Electric Mfg. Co.	2256 Dickson Street St. Louis, Missouri
	WX	Westinghouse Electric Corp.	2519 Wilkins Avenue Baltimore 3, Maryland
	CV	Weston Electrical Instrument Corp.	619 Frelinghuysen Avenue Newark, New Jersey
	CA	White, S.S., Dental Co.	10 E. 46th Street New York, New York
		Whiting & Davis Co., Inc.	Plainville, Massachusetts
		Wilcox Crittendon & Co., Inc.	Middletown, Connecticut
		Williams, J.H., Co.	Buffalo 7, New York
		Winchester Electric Co.	Willard Road Norwalk, Connecticut
	CARA	Wing, L.J., Mfg. Co.	154 W. 14th Street New York, New York
		Zierich Mfg. Co.	Beechwood & Rockdale Avenues New Rochelle, New York

INDEX

SUBJECT	PARAGRAPH (*Figure*) **Table*
A	
A and PPI scope trouble-shooting guide	*7–6
Access to bottom of radar receiver-transmitter	(6–10)
Accessories Case CY-1297/TPS-1D, description of	1–2.*p.*, (1–17)
Adjustment and check procedures:	
General	7–9.*b.*(1)
Receiver	7–9.*b.*(2)
Transmitter	7–9.*b.*(3)
Air filter and pressure valve, case	(6–4)
Air filter and screen, servo amplifier	(6–3)
Air filter arrangement, panel	(6–1)
Alignment:	
(See Routine Alignment and also under applicable unit.)	
Alignment patterns for 9- and 60-megacycle amplifiers	(7–39)
Amber filter with cursor line, use of	(4–8)
Amplifier:	
(See under appropriate unit.)	
Antenna AS-673/TPS-1E:	
Description	1–2.*b.*, (1–9)
Details	(3–10)
General theory of operation	2–11, (2–42 thru 2–47)
Outline drawing	(3–29)
Photograph	(1–9)
Radiation patterns	(2–43)
R-f feed system	(2–42)
Antenna Base AB-498/TPS-1G:	
Coaxial line support	(3–19)
Component location	(7–87, 7–88)
Description	1–2.*g.*, (1–8)
Details	(3–12)
Disabling interlock	7–1.*g.*(8), 7–1.*g.*(9)
Drive assembly	2–9.*b.*, (7–83, 7–90, 7–110)
Drive assembly adjustments	7–10*c.*, (7–82)
Drive assembly repair or overhaul	7–10.*d.*, (7–89, 7–90)
Drive motor practical wiring diagram	(7–106)
General theory of operation	2–9.*a.*, (7–118)
Outline drawing	(3–27)
Photograph	(1–8)
Rotation control mechanism	(7–32, 7–33)
Safety switch	(7–8)
Schematic	(7–118)
Servo amplifier	2–9.*c.*, (2–39, 2–40)
Servo amplifier adjustments	7–10.*b.*

SUBJECT	PARAGRAPH (*Figure*) **Table*
Servo amplifier practical wiring diagram	(7–105)
Spindle	(3–13)
Synchro system	2–10., (2–41)
Synchro system alignment	7–11.*a.*
Trouble-shooting	7–10.*a.*
Antenna drive assembly ..	2–9.*b.*, (7–83, 7–90, 7–110)
(Also see under Antenna Base.)	
Antenna synchro system	2–10., (2–41)
(Also see under Antenna Base.)	
A-scope presentation, gate adjustments ..	(4–13, 4–14)
A-scope presentation, normal	(4–6)
A-scope presentation showing appearance of echo box Signal with selector switch on NORMAL	(4–9)
A-scope presentation showing balance misadjustments	(4–7)
A-scope presentation with MTI showing various conditions of COHO adjustment with selector switch on COHO ADJUST	(4–11)
Azimuth and Range Indicator IP-141A/TPS-1D:	
A and PPI scope trouble-shooting guide	*7–6
Adjustments	7–6.*e.*
Adjustments and test points, bottom side	(7–22)
Adjustments and test points, top side	(7–23)
Adjustments, panel screwdriver	(7–21)
A-scope presentation, gate adjustments	(4–13, 4–14)
A-scope presentation, normal	(4–6)
A-scope presentation showing appearance of echo box signal with selector switch on NORMAL	(4–9)
A-scope presentation showing balance adjustments	(4–7)
A-scope presentation with MTI showing various conditions of COHO adjustment with selector switch on COHO ADJUST	(4–11)
A-scope sweep and scope deflection schematic	(2–31)
Checking circuits under operating conditions	7–6.*c.*
Comparison of PPI scope signals with and without MTI	(4–12)
Component locations, bottom midframe	(7–31)

SUBJECT	PARAGRAPH (*Figure*) *Table
Component locations, bottom side	(7–28)
Component locations, left side	(7–29)
Component locations, panel	(7–24)
Component locations, PPI yoke	(7–30)
Component locations, rear	(7–25)
Component locations, right side	(7–27)
Component locations, top side	(7–26)
Description	1–2.*c.*, (1–4)
Disabling interlock	7–1.*g.* (4)
General theory of operation	2–6.*a.*, (7–112)
High voltage rectifier location	(5–10)
High-voltage supply schematic	(2–35)
Interlock	(7–2)
Major schematic	(7–112)
Marker generators	2–6.*c.*, (2–32)
Miscellaneous circuits	2–6.*f.*, (2–35, 7–112)
Multivibrator and blocking oscillator resistor replacement	7–6.*b.*
Outline drawing	(3–28)
Panel controls	(4–2)
Photograph	(1–4)
PPI scope sweep and scope deflection schematic	(2–30)
Practical wiring diagram, lower half of rear subchassis	(7–93)
Practical wiring diagram, panel and mid-frame	(7–94)
Practical wiring diagram, upper half of rear subchassis	(7–92)
Removed from case	(3–20)
Scope high-voltage supply measurements	7–6.*d.*
Strobe gate generator	2–6.*d.*, (2–33)
Sweep circuits	2–6.*b.*, (2–30, 2–31)
Synchro system alignment	7–11.*b.*
Trouble-shooting	7–6.*a.*
Tube locations, bottom side	(5–8)
Tube locations, left side	(5–6)
Tube locations, right side	(5–7)
Tube locations, top side	(5–9)
Tube replacement, scope	(5–16)
Video circuits	2–6.*e.*, (2–34)
Voltage and resistance measurements	(7–34, 7–35)
Azimuth indicator: (See Azimuth and Range Indicator.)	
B	
Basic principles of operation	1–3.
Block diagram: (See under applicable unit.)	
Blower and heater, radar modulator	2–2.*g.*, (7–111)
C	
Cable check	6–9.
Cables and fittings, RF coax	(3–15)
Cables and plugs, system	(1–10, 3–18)
Cables, interconnecting	*1–7
Cables, RF coax	(1–11)
Cables, system	1–2.*i.*, (1–10)
Cabling, external	(7–108)
Carrier gate measurement	(7–37)
Case CY-1060/TPS-1D:	
Description	1–2.*k.*, (1–13)
Details	(3–3)
Filter replacement	(6–2)
Outline drawing	(3–30)
Photograph	(1–13)
Pressure valve and air filter	(6–3)
Case CY-2071/TPS-1G:	
Description	1–2.*l.*, (1–14)
Details	(3–5)
Filter replacement	(6–2)
Outline drawing	(3–31)
Photograph	(1–14)
Pressure valve and air filter	(6–3)
Case CY-2072/TPS-1G:	
Description	1–2.*n.*, (1–15)
Details	(3–6)
Filter replacement	(6–2)
Outline drawing	(3–33)
Photograph	(1–15)
Pressure valve and air filter	(6–3)
Case CY-2078/TPS-1G:	
Description	1–2.*m.*
Filter replacement	(6–2)
Outline drawing	(3–32)
Pressure valve and air filter	(6–3)
Case Accessories CY-1297/TPS-1D:	
Filter replacement	(6–2)
Outline drawing	(3–30)
Photograph	(1–17)
Pressure valve and air filter	(6–3)
Chassis catch and catch release	5–3.*b.* (4),(5–17)
Check chart, operators maintenance	*5–1
Check chart, preventive maintenance	*6–1
Cleaning:	
Case air valves	6–5.*f.*
Cleaning air filters	6–5.*e.*
General	6–5.*a.*
Terminal strips	6–5.*b.*
Touching up and refinishing	6–5.*d.*
Tubes	6–5.*c.*
Coaxial adapter	(7–9)
Coaxial adapter connections	(7–70)
Coax fittings and cables, RF	(3–15)
Coherent oscillator (Coho), signal comparator:	
Schematic	(2–22)
Theory of operation	2–4.*c.*
Voltage and resistance measurements	(7–45)
Coho mixer, radar receiver-transmitter:	
Assembly details	(2–8)
Crystal replacement	6–7.*f.*, (6–12)

SUBJECT	PARAGRAPH (*Figure*) *Table
Schematic	(2–9)
Theory of operation	2–3.*d.* (2), (2–8, 2–9)
Coho preamplifier, radar receiver-transmitter:	
Component locations	(7–80)
Practical wiring diagram	(7–103)
Schematic	(2–17)
Theory of operation	2–3.*f.*
Comparison of PPI scope signals with and without MTI	(4–12)
Complete Radio Set AN/TPS-1G	(1–1)
Component locations: (See under applicable unit.)	
Component replacement:	
Capacitors	7–3.*c.*
General	7–3.*a.*
Tubes	7–3.*b.*
Control circuit assembly and local oscillator, radar receiver-transmitter (See Local oscillator and Control Circuit Assembly, radar receiver-transmitter.)	
Control chassis, power supply	2–7.*c.*, (2–37)
Convenience outlets	7–1.*b.*
Corrective maintenance, general (See General Corrective Maintenance.)	
Corrective maintenance	7
Crystal replacement (See Tube and Crystal Replacement.)	
D	
Delay amplifier, signal comparator:	
Schematic	(2–25)
Theory of operation	2–4.*f.*
Voltage and resistance measurements	(7–46)
Delay line, signal comparator 2500-microsecond	2–4.*e.*, (2–24)
Delay network:	
Case details	(7–41)
Connections	(7–40)
Details	(2–24)
Test attenuator connections	(7–42)
Description of units:	
Accessories case	1–2.*p.*, (1–17)
Antenna	1–2.*b.*, (1–9)
Antenna base	1–2.*g.*, (1–8)
Azimuth and range indicator	1–2.*c.*, (1–4)
Cables	1–2.*i.*, (1–10, 1–11)
Case CY-1060/TPS-1D	1–2.*k.*, (1–13)
Case CY-2071/TPS-1G	1–2.*l.*, (1–14)
Case CY-2072/TPS-1G	1–2.*n.*, (1–15)
Case CY-2078/TPS-1G	1–2.*m.*
Mounting	1–2.*a.*, (1–2)
Plugs	1–2.*i.*, (1–10, 1–11)
Power supply	1–2.*e.*, (1–6)
Radar modulator	1–2.*b.*, (1–3)
Radar receiver-transmitter	1–2.*f.*, (1–7)
R-F connectors	1–2.*i.*, (1–11)
Shelter	1–2.*j.*, (1–12)
Signal comparator	1–2.*d.*, (1–5)
Signal comparator test set	1–2.*r.*, (1–19)
Tuned cavity	1–2.*o.*, (1–16)
Tune-up mirror	1–2.*s.*, (1–20)
Variable power transformer	1–2.*q.*, (1–18)
Directional coupler output characteristics	(7–71)
Dismantling and preparation of equipment for transport	3–2.*f.*
Drive assembly, antenna:	
Exploded view	(7–90)
Schematic diagram	(7–110)
Theory of operation	2–9.*b.*
E	
Electron tube complement	*1–4
Emergency maintenance:	
Gaining access to unit chassis	5–3.*b.*(4)
Locating faulty tubes	5–3.*b.*(2), *5–2
Replacement of scope tubes	5–3.*b.*(3), (5–16)
Replacing electron tubes	5–3.*b.*
Replacing fuses	5–3.*a.*, (5–1, 5–2)
Equipment and publications required but not supplied	*1–2
Equipment assembly details	(3–1)
Equipment changes made during production	1–5
Equipment check and initial adjustments:	
IFF adjustments	3–6.*d.*
Initial operational checks and adjustments	3–6.*b.*
Procedure	3–6.*c.*
Visual check	3–6.*a.*
Equipment supplied	*1–1
Erecting gin pole	(3–1)
Erection of tower	3–2.*b.*, (3–8)
Exploded view of drive motor subassembly	(7–90)
External cabling	(7–108)
F	
Field installation:	
Dismantling and preparation of equipment for transport	3–2.*f.*
Erection of shelter tent	3–2.*c.*, (1–12, 3–1)
Erection of tower	3–2.*b.*, (3–1)
Heating power connections	3–2.*d.*
Marker spacing adjustment	3–2.*e.*
Selection of operating site	3–2.*a.*
Filament power	7–1.*c.*, *7–1
Filter replacement, case,	(6–2)
Fittings and cables, RF Coax	(1–11, 3–15)
Fixed station installation	3–7
Functional similarity to Radio Set AN/TPS-1D:	
Major functional differences	1–6.*a.*
Minor differences	1–6.*b.*
Fuses:	
Maintenance	6–6.
Radar modulator	2–2.*e.*, (5–1, 5–2)
Replacement	5–3.*a.*, (5–1, 5–2)

SUBJECT	PARAGRAPH (*Figure*) *Table*
G	
General corrective maintenance:	
Convenience outlets	7–1.*b.*
Crystal diodes	7–1.*e.*
Delay line W2350	7–1.*f.*
Disabling interlocks	7–1.*g.*
Filament power	7–1.*c.*, *7–1
Phone circuit	7–1.*i.*
Primary power and d-c control circuits	7–1.*b.*
Resistors	7–1.*d.*
Use of section	7–1.*a.*
General description	1–1, (1–1)
General operation:	
Approach to operation	4–1.*a.*
Limitations of MTI	4–1.*b.*
General operators maintenance	5–1.
General theory of operation:	
Basic MTI theory	2–1.*a.*, (2–2)
MTI circuit requirements	2–1.*b.*
Operating limitations	2–1.*c.*, (2–3, 2–4)
Gin pole, erecting	(3–8)
Guy cable accessories	(3–14)
H	
Harmonic attenuation details	(2–13)
Heater power connections, field installation	3–2.*d.*
Heater power link connections	(3–22)
Heater, radio modulator blower and	2–2.*g.*, (7–111)
High voltage power supply, radar modulator	2–2.*d.*, (2–6)
Hoisting arrangement for erecting units	(3–4)
I	
I-F amplifier (60 MC), signal comparator:	
Schematic	(2–20)
Theory of operation	2–4.*b.*
Voltage and resistance measurements	(7–44)
I-F preamplifier (60 MC) radar receiver-transmitter:	
Alignment pattern	(7–68)
Component locations	(7–81)
Schematic	(2–18)
Test connections	(7–67)
Theory of operation	2–3.*g.*
IFF:	
Antenna connections	(3–11)
Antenna dipole and reflector	(2–45)
Antenna reflector arrangement	(2–46)
Antenna system	(2–44)
Maintenance	7–12.
Power and sync connections	2–7.*d.*
IFF maintenance:	
Adjustments	7–12.*b.*
Adjustments necessary as part of equipment check	3–6.*d.*
Trouble-shooting	7–12.*a.*
Indicator:	
(See Azimuth and Range Indicator.)	
Initial adjustments:	
(See Equipment Check and Initial Adjustments.)	
Inspection	6–4, *6–1
Installation	3
Installation and operation of antenna at remote point:	
Connections	3–4.*c.*
General	3–4.*a.*
Installation	3–4.*b.*
Operation	3–4.*d.*
Installation and operation of azimuth and range indicator at remote point	3–3, (3–19)
Installation, field:	
(See Field Installation.)	
Installation of MIL dial	3–9.
Installation of repeater PPI:	
Changes in power supply unit	3–5.*b.*
Interconnections	3–5.*a.*
Zeroing	3–5.*c.*
Interchangeability of components between AN/TPS-1D and AN/TPS-1G:	
Components of AN/TPS-1D installed in AN/TPS-1G	1–7.*b.*
Components of AN/TPS-1G installed in AN/TPS-1D	1–7.*a.*
Interconnecting cables	*1–7
Interlocks:	
Power supply	7–1.*g.*(6)
Radar modulator	2–2.*i.*, 7–1.*g.*(3)
Radar receiver-transmitter	(7–5)
Servo amplifier, antenna base	(7–7)
Signal comparator	7–1.*g.*(5), (7–3)
Internal adjustments, signal comparator	(4–10)
Internal triggers, use of	4–4.*d.*
L	
Limitations, operating	2–1.*c.*, (2–3, 2–4)
Local oscillator and control circuit assembly, radar receiver-transmitter:	
Component location	(7–79)
Details	(2–16)
General	2–3.*e.*(1)
Injector	2–3.*d.*(5), (2–14)
Local oscillator tube replacement	6–7.*b.*, (6–5, 6–6)
Local oscillator tuning	2–3.*e.*(3), (2–15, 2–16)
Practical wiring diagram	(7–104)
Schematic	(2–15)
Screw location, securing	(3–17)
Theory of operation	2–3.*e.*(2)
Lubrication	6–12, *6–4

SUBJECT	PARAGRAPH (*Figure*) *Table
M	
Magnetron, radar receiver-transmitter:	
Frequency stability	2–3.*c.*
Output connector	(6–8)
Replacement	6–7.*c.*, (6–7)
Schematic	(2–7, 2–9)
Theory of operation	2–3.*b.*
Maintenance, emergency:	
(See Emergency Maintenance.)	
Maintenance, general corrective:	
(See General Corrective Maintenance.)	
Maintenance, general operator's	5–1
Maintenance, preventive:	
(See Preventive Maintenance.)	
Marker generators, azimuth and range indicator:	
Schematic	(2–32)
Theory of operation	2–6.*c.*
Marker spacing adjustment, field installation	3–2.*e.*
Measuring VSWR, test equipment arrangement for	(7–72)
Mirror tune-up	(1–20)
Mixer simulator and special coaxial lead	(7–66)
Modulator:	
(See Radar Modulator.)	
Mounting MT-960/TPS-1D	1–2.*a.*, (1–2)
MTI:	
Alignment	7–7.*d.*
Basic theory	2–1.*a.* (2–2)
Circuit requirements	2–1.*b.*
Comparison of PPI scope signals with and without MTI	(4–12)
Gate generator, signal comparator	2–4.*i.*, (2–28)
Maintenance	7–7.*e.*
Operational limitations	4–1.*b.*
Range gate control	4–4.*i.*
Repetition rate trigger amplifier, signal comparator	2–4.*d.*, (2–23)
Signal amplitude vs. relative target speed	(2–3)
Theory	2–1.*a.*, (2–2)
MTI gate generator, signal comparator:	
Component locations	(7–55)
Schematic	(2–28)
Theory of operation	2–4.*i.*
MTI repetition rate trigger amplifier, signal comparator:	
Component locations	(7–50, 7–51)
Schematic	(2–23)
Theory of operation	2–4.*d.*
N	
Non-delay amplifier, signal comparator:	
Schematic	(2–26)
Theory of operation	2–4.*g.*
Voltage and resistance measurements	(7–47)
Normal A-scope presentation	(4–6)

SUBJECT	PARAGRAPH (*Figure*) *Table
O	
Operating controls	*4–1
(Also see Operating Notes.)	
Operating control functions	*4–1
Operating limitations	2–1.*c.*, (2–3, 2–4)
Operating notes:	
Coordination of A and PPI scopes	4–4.*c.*
Exhaust for operation	4–4.*e.*
MTI range gate	4–4.*i.*
Protective devices	4–4.*f.*
Range marker spacing	4–4.*b.*
Receiver gain control	4–4.*b.*
Use of internal triggers	4–4.*d.*
Use of phone circuit	4–4.*g.*
Video gain controls	4–4.*a.*
Operating procedure:	
Checking	4–2.*c.*, (4–1 thru 4–5)
General	4–2.*a.*
Operating	4–2.*d.*, (4–2)
Starting procedure	4–2.*b.*, (4–1 thru 4–4)
Operating site, selection of	3–2.*a*
Operators maintenance, general	5–1.
Outline drawings:	
(See under applicable unit.)	
Over-temperature reset button, transmitter	(4–14)
P	
Panel air filter arrangement	(6–1)
Panel controls:	
(See under applicable unit.)	
Phase detector characteristic	(2–21)
Phase relationship of transmitted signals vs. echo signal	(2–2)
Phone circuit:	
Corrective maintenance	7–1.*i.*
General description	1–4.
Use of	4–4.*g.*
Plugs and cables, system	(3–18)
Plugs, system	1–2.*i.*, (1–10)
Portable installations	3–8.
Power Supply PP-674A/TPS-1D:	
Adjustments	7–8.*b.*
Circuits	2–7.*b.*, (2–36)
Component locations, bottom side	(7–62)
Component locations, front	(7–64)
Component locations, rear	(7–63)
Component locations, rectifier tubes removed	(7–56)
Component locations, top side	(7–61)
Control chassis	2–7.*c.*
Control chassis schematic	(2–37, 7–57)
Description	1–2.*e.*, (1–6)
Disabling interlock	7–1.*g.*(6)
Fuses	(5–1)
General theory of operation	2–7.*a.*, (7–115)
IFF power and sync connections	2–7.*d.*
Main chassis schematic	(2–36)

SUBJECT	PARAGRAPH (*Figure*) **Table*
Major schematic	(7—115)
Outline drawing	(3—26)
Panel details	(4—1)
Photograph	(1—6)
Practical wiring diagram, bottom view	(7—98)
Practical wiring diagram, control subchassis	(7—99)
Practical wiring diagram, front panel	(7—100)
Shorting switch	(7—4)
System and heater fuses	(5—2)
Timing relay adjustment	(7—59)
Trouble shooting	7—8.*a.*
Tube locations	(5—12)
Voltage adjustments	(7—58)
Voltage and resistance measurements	(7—60)
Power transformer, variable: (See Variable Power Transformer.)	
Practical wiring diagrams: (See under applicable unit.)	
Preamplifier: (See under applicable unit.)	
Preparation of equipment for transport, dismantling	3—2.*f.*
Pressure valve and air filter, case	(6—3)
Preventive maintenance:	
Cable check	6—9.
Cleaning	6—5.
Fuse maintenance	6—6.
Gaining access to antenna on field installations	6—3., (3—1)
Gaining access to unit chassis	6—2.
General	6—1.
Inspection	6—4, 6—1.
Lubrication	6—12.
Relay maintenance	6—8.
Retropicalization	6—11.
Spare tube, check	6—10.
Tube and crystal replacement	6—7.
Primary power and d.c. control circuits	7—1.*b.*, (7—109)
Productional alterations of equipment	1—5.
Protective devices	4—4.*f.*
Protective relay, radar modulator	2—2.*b.*, (2—6)
Publications required but not supplied	*1—2

R

Radar Modulator MD-144A/TPS-1D:	
Blower and heater	2—2.*g.*, (7—111)
Component locations, lower front	(7—17)
Component locations, lower left	(7—16)
Component locations, lower right	(7—18)
Component locations, rear	(7—15)
Component locations, top right	(7—13)
Component locations, top side	(7—14)
Description	1—2.*b.*, (1—3)
Details, right side	(7—1)
Disabling interlock	7—1.*g.*(3)
Fuses	2—2.*e.*, (5—1, 5—2)
General theory of operation	2—2.*a.*, (7—111)
High voltage adjustment	7—5.*d.*, (7—11)
High voltage power supply	2—2.*d.*, (2—6)
High-voltage transformer primary taps	(7—11)
Interlocks	2—2.*i.*
Major schematic	(7—111)
Modulator circuit	2—2.*c.*, (2—6)
Outline drawing	(3—23)
Output circuit	(2—6)
Panel controls	(4—3)
Photograph	(1—3)
Practical wiring diagram	(7—91)
Protective relay	2—2.*b.*, (2—6)
Protective relay balance adjustment	7—5.*c.*, (7—1)
Repetition rate adjustment	7—5.*b.*, (7—1)
R-f noise suppression	2—2.*f.*, (2—6)
Trigger chassis tube locations	(5—5)
Trigger circuits	2—2.*b.*, (2—5)
Trouble shooting	7—5.*a.*
Tube locations, rear of chassis	(5—3)
Tube locations, top side	(5—4)
Voltage and resistance measurements	(7—12)
Access to bottom	(6—10)
Adjustment and check procedures	7—9.*b.*
Adjustments	(7—65)
Cavities assembly details	(2—11)
Cavities assembly, r-f system	2—3.*d.*(3), (2—8, 2—10, 2—11)
Cavities assembly tube replacement	(6—9)
Coho mixer, r-f system	2—3.*d.*(2), (2—8, 2—9, 6—12)
Coho preamplifier	2—3.*f.*
Component locations, bottom side	(7—77, 7—78)
Component locations, right side	(7—76)
Component locations, top left	(7—75)
Component locations, top right	(7—74)
Description	1—2.*f.*, (1—7)
Disabling interlock	7—1.*g.*(7)
Fuses	2—3.*i.*
General theory of operation	2—3.*a.*, (7—117)
Harmonic attenuator, r-f system	2—3.*d.*(4), (2—13)
I-f preamplifier	2—3.*g.*, (2—18)
Interlock and warning light	(7—5)
Local oscillator	2—3.*e.*(2), (2—15)
Local oscillator and control circuit assembly	2—3.*e.*, (2—15, 2—16, 7—79, 7—104)
Local oscillator component locations	(7—79)
Local oscillator injector, r-f system	2—3.*d.*(5), (2—14)
Local oscillator tube replacement	6—7.*b.*, (6—5, 6—6)
Local oscillator tuning	2—3.*e.*(3), (2—15, 2—16)
Location of keep-alive rectifier tube	(5—14)
Magnetron	2—3.*b.*, (2—7, 2—9)

SUBJECT	PARAGRAPH (*Figure*) *Table
Magnetron frequency stability	2–3.*c.*
Miscellaneous circuits	2–3.*h.*, (7–117)
Outline drawing	(3–24)
Panel controls	(4–4)
Photograph	(1–7)
Receiver crystal and special tube replacement	(6–5)
Receiver input circuit equivalent	(2–12)
R-f system	2–3.*d.*, (2–7 thru 2–11)
Schematic	(7–117)
Transmitter circuit	(2–7)
Transmitter overtemperature reset button	(4–14)
Transmitter trouble-shooting guide	*7–4
Trouble-shooting	7–9.*a.*, *7–4
Tube locations, bottom side	(5–13)
Voltage and resistance measurements	(7–73)
Wiring diagram (main chassis)	(7–102)
Warning light (bottom of chassis)	(7–6)
Radiation patterns, antenna	(2–43)
Radio Set AN/TPS-1G, block diagram	(2–1)
Radio Set AN/TPS-1G, complete	(1–1)
Range indicator: (See Azimuth and Range Indicator.)	
Range marker spacing	4–4.*b.*
Receiver: (See Radar Receiver-Transmitter RT-212A/TPS-1D.)	
Receiver-transmitter: (See Radar Receiver-Transmitter RT-212A/TPS-1D.)	
Recommended test equipment and usages	*7–2
Reference data	*1–6
Relay: (See under applicable unit.)	
Relay maintenance	6–8.
Remote set-up:	
Installation and operation of azimuth and range indicator	3–3, (3–19)
Installation of antenna	3–4.
Repeater PPI, installation of: (See Installation of Repeater PPI.)	
Report forms	1–8.
Retropicalization:	
General	6–11.*a.*
Procedure	6–11.*b.*
RF coax fittings and cables	1–2.*i.*, (1–11, 3–15)
RF noise suppression, radar modulator	2–2.*f.*, (2–6)
RF system, radar receiver-transmitter:	
Cavities assembly	2–3.*d*(3), (2–8, 2–10, 2–11)
Coho mixer	2–3.*d.*(2), (2–8, 2–9)
Harmonic attenuator	2–3.*d.*(4), (2–13)
Local oscillator injector	2–3.*d.*(5)
Rotary joint details	(7–89)
Routine alignment:	
Alignment outline	4–3.*b.*
Alignment procedure	4–3.*c.*
General	4–3.*a.*
Routine check chart, operators maintenance	*5–1
Routine check chart, preventive maintenance	*6–1
Routine checks	5–2.
RPPI and IFF trigger circuit terminating resistor	(3–21)

S

Schematic diagrams: (See under applicable unit.)	
Selection of operating site	3–2.*a.*
Semi-conductor device complement	*1–5
Servicing block diagram	(7–107)
Servo amplifier, antenna base:	
Air filter and screen	(6–4)
Case component location	(7–86)
Component locations, bottom side	(7–82)
Component locations, top side	(7–85)
Chassis schematic	(2–39)
Interlock	(7–7)
Theory of operation	2–9.*c.*
Thyratron grid circuit schematic	(2–40)
Tube location	(5–15)
Ventilation covers	(3–16)
Voltage and resistance measurements	(7–84)
Setting power supply in place	(3–9)
Shelter S-68/TPS-1D:	
Description	1–2.*j.*, (1–12)
Erection	3–2.*c.*, (1–12, 3–1)
Shipping data	*1–3
Signal Comparator CM-36A/TPS-1D:	
Adjustments	(7–36)
Alignment patterns for 9- and 60-Mc amplifiers	(7–39)
Block diagram	(2–19)
Checks and adjustments	7–6.*b.*
Coherent (coho) oscillator	2–4.*c.*, (2–22)
Component locations, chassis inverted	(7–54)
Component locations, MTI gate generator	(7–55)
Component locations repetition rate trigger amplifier	(7–50, 7–51)
Component locations, sub-chassis	(7–49)
Component locations, top side of chassis	(7–48)
Component locations, video balancer and amplifier	(7–52, 7–53)
Delay amplifier	2–4.*f.*, (2–25)
Delay line, 2500-microsecond	2–4.*e.*, (2–24)
Description	1–2.*d.*, (1–5)
Disabling interlock	7–1.*g.*(5)
General theory of operation	2–4.*a.*, (2–19)
I-f amplifier, 60-Mc	2–4.*b.*, (2–20)
Interlock	(7–3)
Internal adjustments	(4–10)

SUBJECT	PARAGRAPH (*Figure*) *Table
Major schematic	(7–113)
MTI alignment	7–7.*d.*
MTI gate generator	2–4.*i.*, (2–28)
MTI maintenance	7–7.*e.*
MTI repetition rate trigger amplifier	2–4.*d.*, (2–23)
Non-delay amplifier	2–4.*g.*, (2–26)
Outline drawing	(3–25)
Panel adjustments	(4–5)
Photograph	(1–5)
Practical wiring diagram, main chassis	(7–95)
Practical wiring diagram, subchassis	(7–96)
Pulse delay network check	7–7.*c.*, (7–36)
Test set outline drawing	(3–36)
Test set photograph	(1–19)
Test set practical wiring diagram	(7–97)
Test set schematic	(2–29, 7–114)
Trouble-shooting guide	*7–5
Trouble-shooting	7–7.*a.*
Tube locations	(5–11)
Video balancer and amplifier	2–4.*h.*, (2–27)
Voltage and resistance measurements, coherent oscillator	(7–45)
Voltage and resistance measurements, delay amplifier	(7–46)
Voltage and resistance measurements, main chassis	(7–43)
Voltage and resistance measurements, non-delay amplifier	(7–47)
Voltage and resistance measurements, 60-Mc amplifier	(7–44)
Signal Comparator Test Set TS-1002/TPS-1G:	
Description	1–2.*r.*, (1–19)
Outline drawing	(3–36)
Practical wiring diagram	(7–97)
Theory of operation	2–5., (2–29)
Schematic	(2–29, 7–114)
Signal mixer crystal replacement	6–7.*e.*, (6–11)
Similarity to Radio Set AN/TPS-1D	1–6.
Spare tubes:	
Check	6–10.
Test chart	*6–3
Special adapter and test lead	(7–38)
Special coaxial lead, mixer simulator and	(7–66)
Spindle, antenna	(3–13)
Stacking bottom units	(3–7)
Starting procedure: (See Operating Procedure.)	
Strobe gate generator, azimuth and range indicator:	
Schematic	(2–33)
Theory of operation	2–6.*d.*
Sweep circuits, azimuth and range indicator:	
Schematics	(2–30, 2–31)
Theory of operation	2–6.*b.*
Synchro circuits schematic	(2–41)
Synchro diagram	(7–110)
Synchro system alignment:	
Antenna	7–11.*a.*
Indicator	7–11.*b.*
System cables and plugs	(3–18)
System trouble-shooting guide	*7–3

T

Test equipment arrangement for measuring VSWR	(7–72)
Test equipment, use of: (See Use of Test Equipment.)	
Test lead, special adapter and	(7–38)
Test Set TS-1002/TPS-1G, signal comparator: (See Signal Comparator Test Set.)	
Tower assembly tool, use of	(3–2)
Transmitter: (See Radar Receiver-Transmitter.)	
Trigger circuits, radar modulator:	
Component locations, bottom side	(7–20)
Component locations, top side	(7–19)
Removed from modulator for checking	(7–10)
Schematic	(2–5)
Theory of operation	2–2.*b.*
Tube locations	(5–5)
Trouble shooting guides	*7–3 thru *7–6
Trouble shooting notes (Also see under applicable major unit.)	7–4.
Tube and crystal replacement:	
Cavities assembly tube replacement	6–7.*d.*, (6–9)
Coho mixer crystal replacement	6–7.*f.*, (6–12)
General	6–7.*a.*
Local oscillator tube replacement	6–7.*b.*, (6–5, 6–6)
Magnetron replacement	6–7.*c.*, (6–7)
Schedule	*6–2
Signal mixer crystal replacement	6–7.*e.*, (6–11)
Tube complement, electron	*1–4
Tube functions	*5–2
Tube locations: (See under applicable unit.)	
Tuned Cavity TS-172B/UP:	
Description	1–2.*o.*, (1–16)
Outline drawing	(3–35)
Tune-up mirror	1–2.*s.*, (1–20)

U

Unpacking	3–1, *1–3
Use of amber filter with cursor line	(4–8)
Use of internal triggers	4–4.*d.*
Use of phone circuit	4–4.*g.*
Use of test equipment:	
Coaxial adapter	7–2.*i.*, (7–9)

SUBJECT	PARAGRAPH (*Figure*) **Table*
General	7—2.*a.*
Multimeter	7—2.*b.*
Oscilloscope, general purpose	7—2.*d.*
Oscilloscope, special types	7—2.*e.*
Recommended test equipment and usages	*7—2
Sweep generator	7—2.*g.*
Test attenuator	7—2.*h.*
Tube tester	7—2.*f.*
VTVM	7—2.*c.*
Use of tower assembly tool	(3—2)
V	
Variable Power Transformer TF-238/U:	
Circuit description	2—8.*b.*
Description	1—2.*q.*, (1—18)
General theory of operation	2—8.*a.*, (2—38)
Outline drawing	(3—34)
Practical wiring diagram	(7—101)
Schematic	(2—38, 7—116)
Variac connections for aging magnetron	(7—69)
Ventilation covers, servo amplifier	(3—16)
Vertical radiation pattern characteristics	(2—4)
Video amplifier, azimuth and range indicator:	
Schematic	(2—34)
Theory of operation	2—6.*e.*
Video balancer and amplifier:	
Component locations	(7—52, 7—53)
Schematic	(2—27)
Theory of operation	2—4.*b.*
Video circuits, azimuth and range indicator:	
Schematic	(2—34)
Theory of operation	2—6.*e.*
Visual check of equipment:	3—6.*a.*
Voltage and resistance measurements: (See under applicable unit.)	
Voltage standing wave ratio curve	(2—47)
W	
Wiring diagram: (See Practical Wiring Diagram under applicable unit.)	

[31 AG 413.44 (9 Oct 58)]

By Order of *Wilber M. Brucker*, Secretary of the Army:

MAXWELL D. TAYLOR,
General, United States Army,
Chief of Staff.

Official:

R. V. LEE,
Major General, United States Army,
The Adjutant General.

Distribution:

Active Army:

ASA (2)
CNGB (1)
Technical Stf, DA (1) except CSigO (30)
Technical Stf Bd (1)
USCONARC (5)
USA Arty Bd (1)
USA Armor Bd (1)
USA Inf Bd (1)
USA Air Def Bd (1)
USA Abn & Elct Bd (1)
USA Avn Bd (1)
USA Armor Bd Test Sec (1)
USA Air Def Bd Test Sec (1)
USA Arctic Test Bd (1)
US ARADCOM (2)
US ARADCOM Rgn (2)
OS Maj Comd (5)
Log Comd (5)
MDW (1)
Armies (5)
Corps (2)
Div (2)
USATC (2)
Svc Colleges (5)
Br Svc Sch (5) except USASCS (25)
Gen Depots (2) except Atlanta Gen Depot (None)
Sig Sec, Gen Depots (10)
Sig Depots (17)
Army Pictorial Cen (2)
Engr Maint Cen (1)
TASSA (15)
Mid-Western Rgn Ofc (TASSA) (1)
USA Sig Pub Agcy (8)
USA Sig Engr Agcy (1)
USA Comm Agcy (2)
USA Sig Eqp Spt Agcy (2)
USA Sig Msl Spt Agcy (13)
WRAMC (1)
AFIP (1)
AMS (1)
Ports of Emb (OS) (2)
Trans Terminal Comd (2)
Army Terminals (2)
OS Sup Agcy (2)
Yuma Test Sta (2)
USA Elct PG (1)
Sig Lab (5)
Sig Fld Maint Shops (3)
Fld Comd, AFSWP (5)
Mil Dist (1)
Sector Comd, US Army Corps (Res) (1)
US Army Corps (Res) (1)
JBUSMC (2)
Units organized under following TOE's:
6-200 (2)
11-7 (2)
11-16 (2)
11-57 (2)
11-500 (AA-AE) (2)
11-557 (2)
11-587 (2)
11-592 (2)
11-597 (2)
44-7 (2)
44-17 (2)
44-115 (2)
44-116 (2)
44-145 (2)
44-146 (2)
44-275 (2)
44-276 (2)
44-445 (2)
44-446 (2)
44-545 (2)
44-546 (2)

NG: State AG (3); units—same as Active Army except allowance is one copy to each unit.
USAR: None.
For explanation of abbreviations used see AR 320-50.

☆ U. S. GOVERNMENT PRINTING OFFICE : 1959 O - 490741